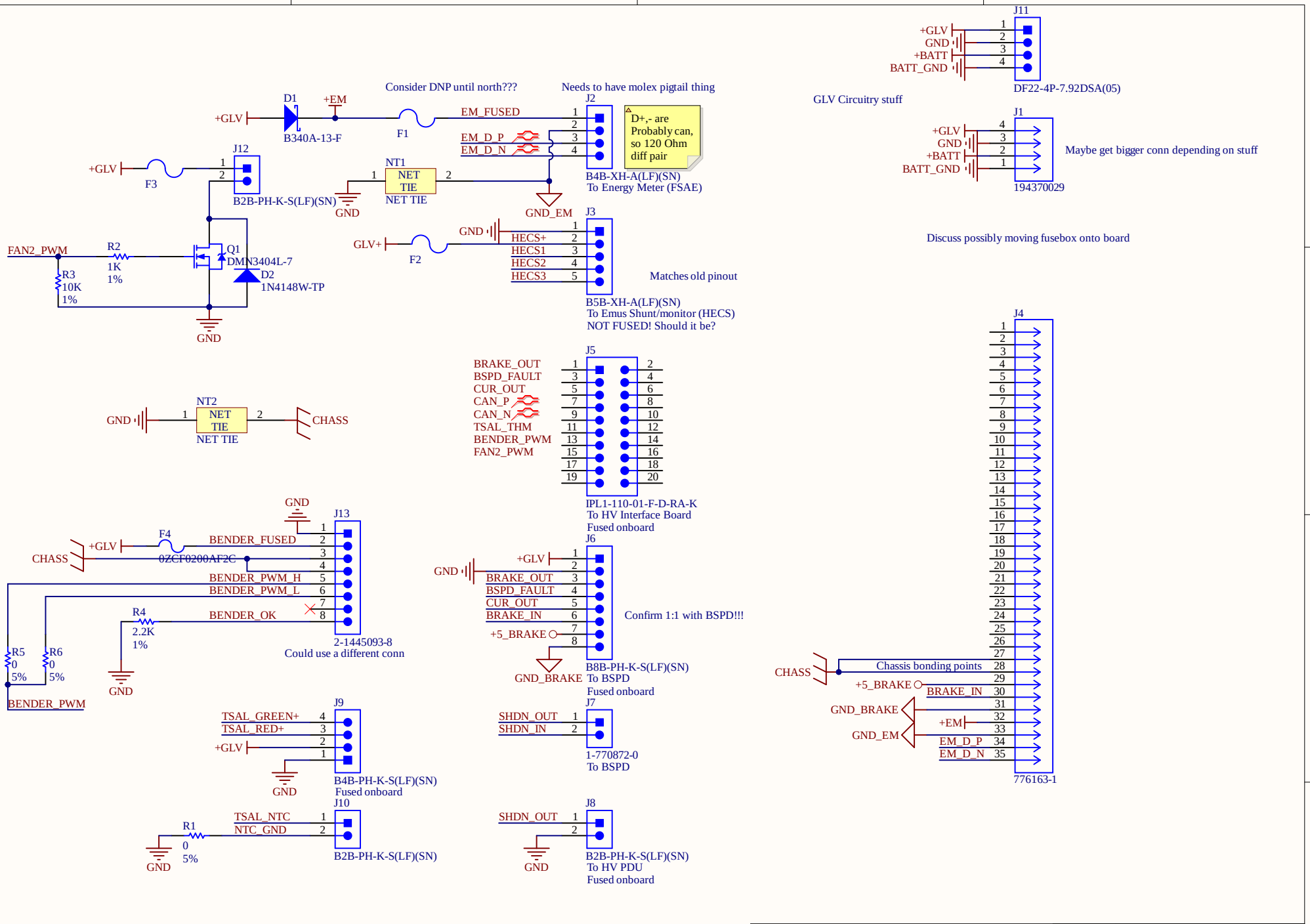

Title: *HV Box Connector Board.SchDoc*

Desc: -

Size: Letter	Auth: *	Proj: HV Box Connector Board.PrjPcb
Date: 2/19/2020 8:54:38 PM	Sheet 1 of 1	www.uvmaero.org
File: C:\git\AERO_2019-2020\HV Box Connector Board\HV Box Connector Board.SchDoc		