Voltage Sense

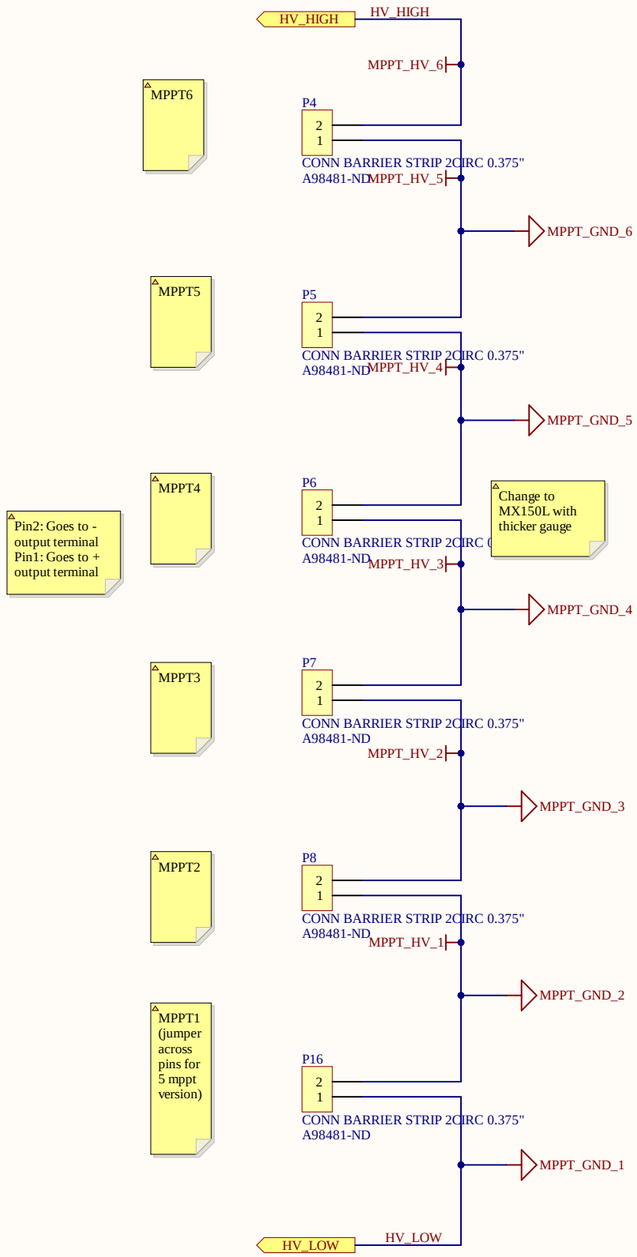

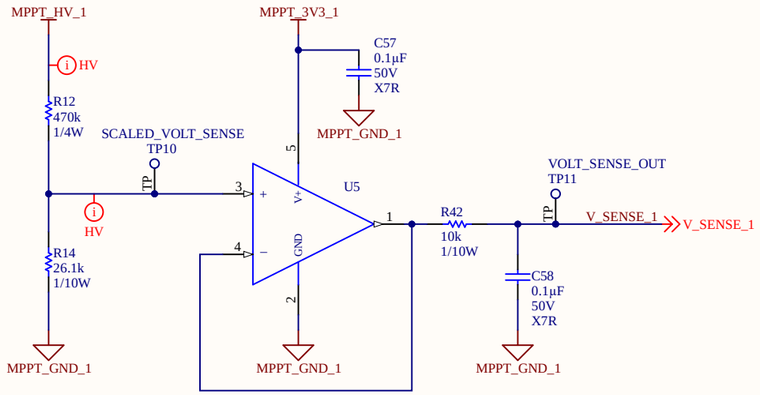

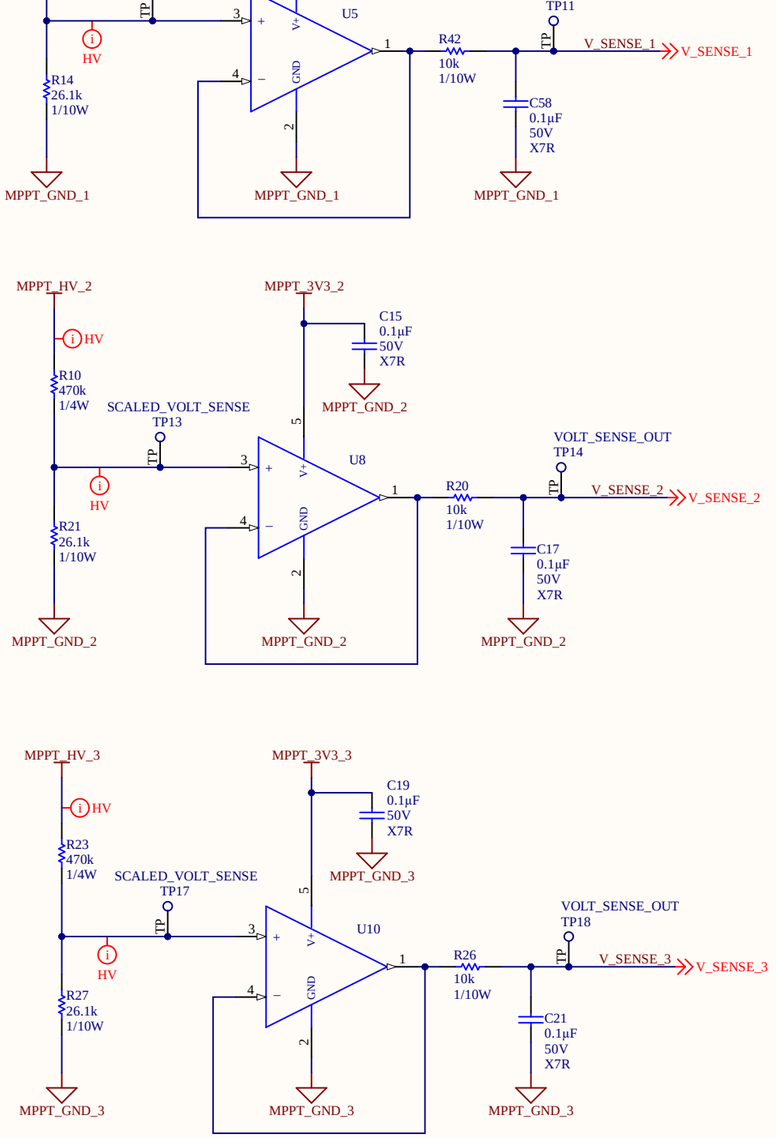

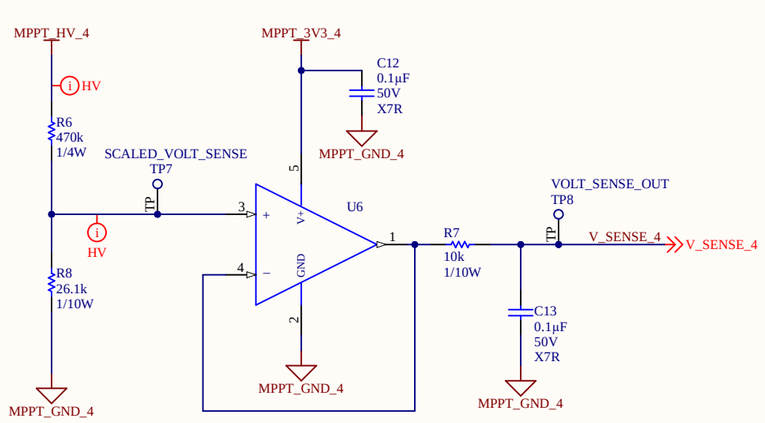

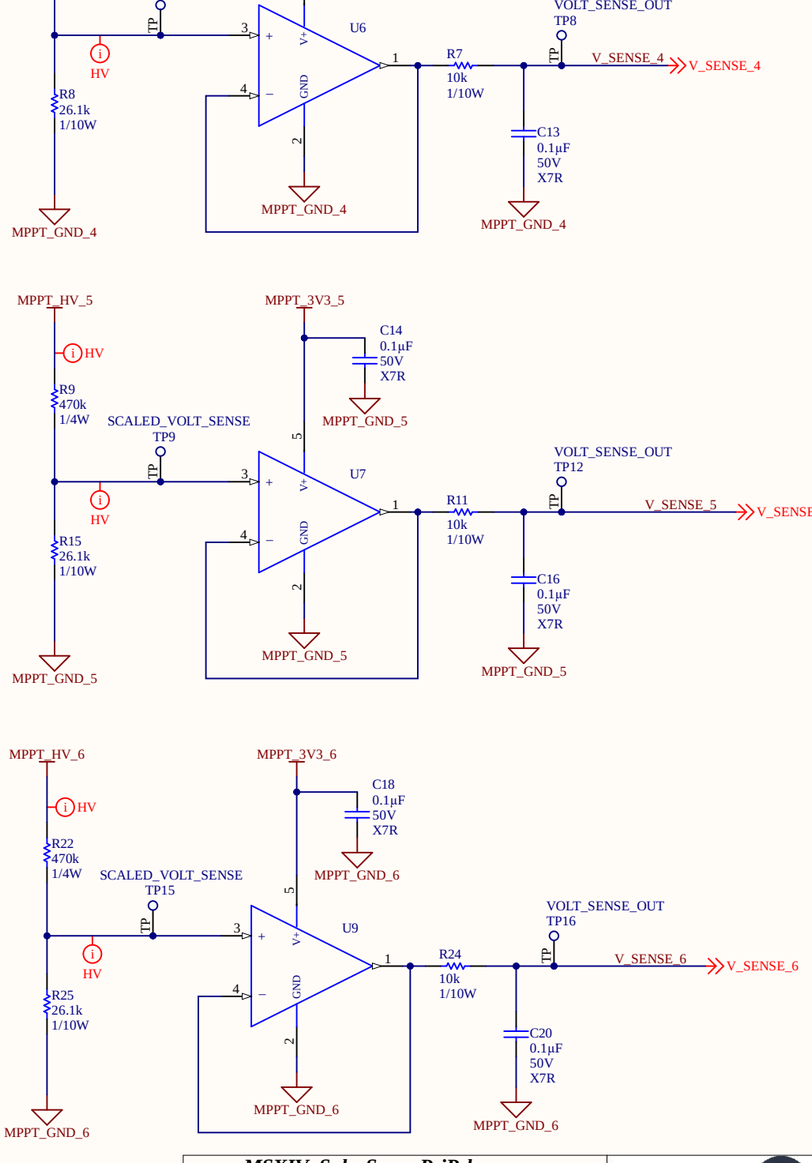

Project: ***MSXIV_SolarSense.PrjPcb***		MIDNIGHT SUN
Title: **Solar Sense Slave**		University of Waterloo 200 University Ave W Waterloo, ON, Canada N2L 3E9
Project Lead: *		
Size: Letter	Revision: *	
Date: 2020-02-09	Sheet 3 of 4	Website: www.uwmidsun.com

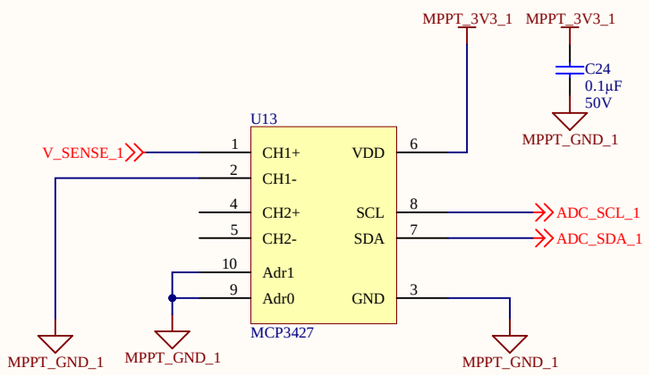

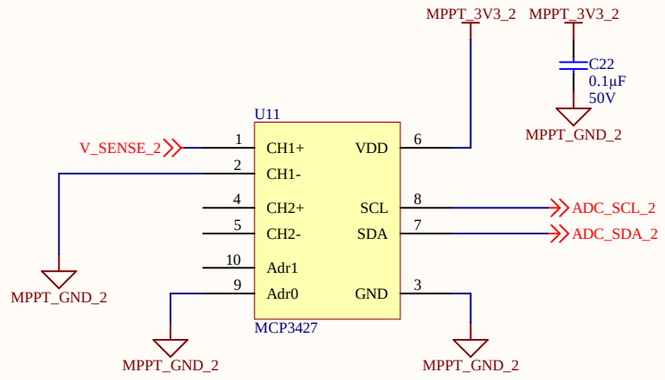

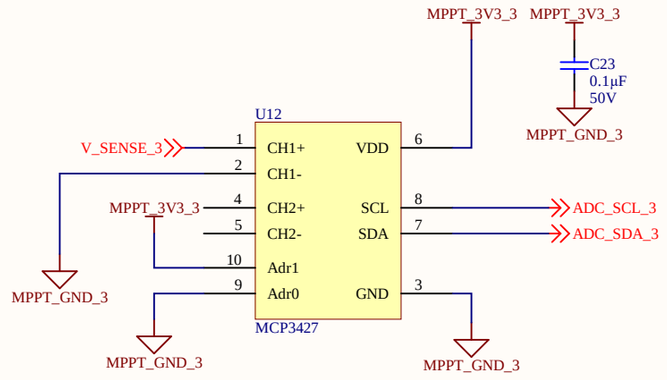

ADCs

I²C Device Address Bits			Logic Status of Address Selection Pins	
A2	A1	A0	Adr0 Pin	Adr1 Pin
0	0	0	0 (Addr_Low)	0 (Addr_Low)
0	0	1	0 (Addr_Low)	Float
0	1	0	0 (Addr_Low)	1 (Addr_High)
1	0	0	1 (Addr_High)	0 (Addr_Low)
1	0	1	1 (Addr_High)	Float
1	1	0	1 (Addr_High)	1 (Addr_High)
0	1	1	Float	0 (Addr_Low)
1	1	1	Float	1 (Addr_High)
0	0	0	Float	Float

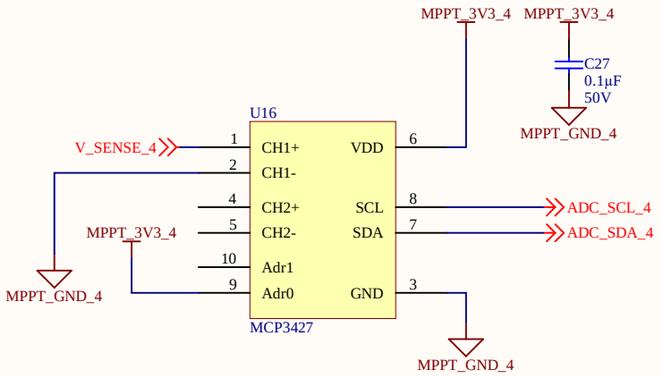

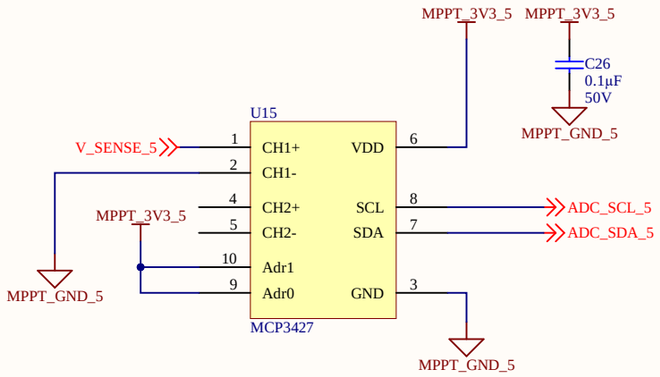

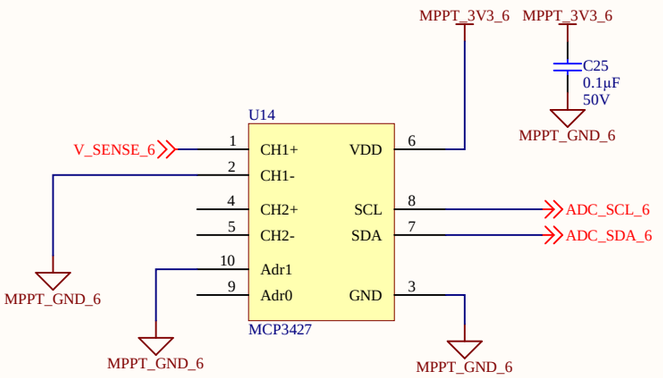

Make combination of pulled high, low and floating (for address pins)

PROJECT	MSXIV_SolarSense.PrjPcb
DOCUMENT	*
PART NUMBER	
VARIANT	[No Variations]
DRAWN BY	Aashmika Mali
REVISION	1.0
LAST MODIFIED	2020-02-09
SHEET	* OF *

MIDNIGHT SUN

Engineering 5 - 1002
University of Waterloo
(519) 888-4567 x32978
hardware@uwmidsun.com

Add 6 gpio pins for slave select on spi, and 6 gpios for temperature sensing

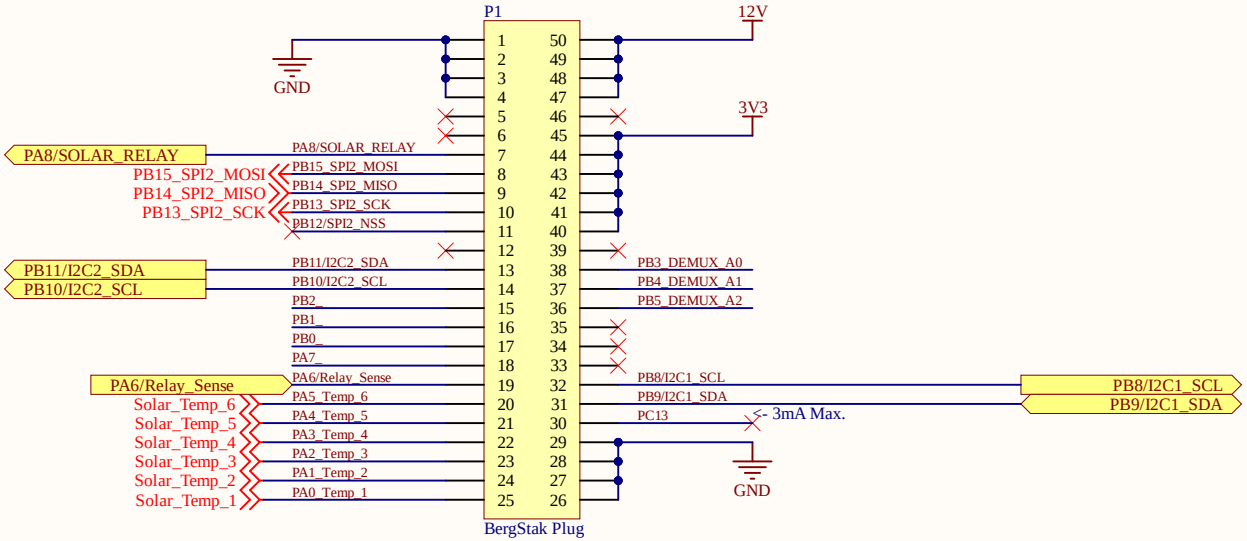

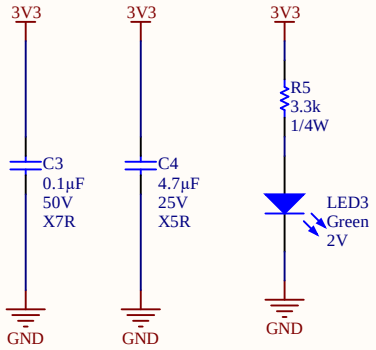

Standoffs

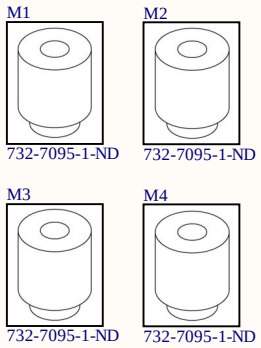

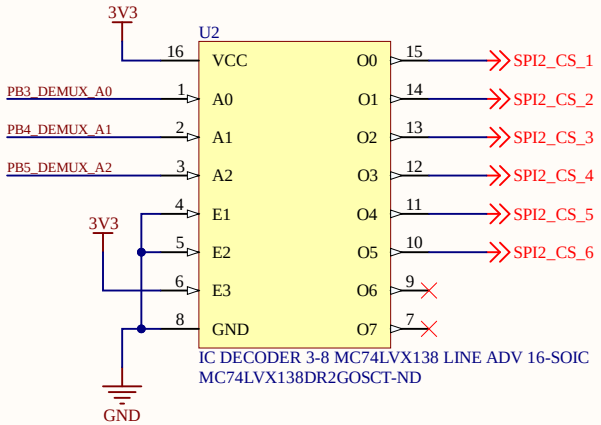

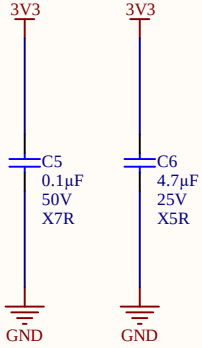

Project: ***MSXIV_SolarSense.PrjPcb***		MIDNIGHT SUN
Title: *		University of Waterloo 200 University Ave W Waterloo, ON, Canada N2L 3E9
Project Author: Aashmika Mali		
Size: Letter	Revision: 1.0	
Date: 2020-02-09	Sheet * of *	Website: www.uwmidsun.com

Passthrough - Current Sense, Fuse, and Relay

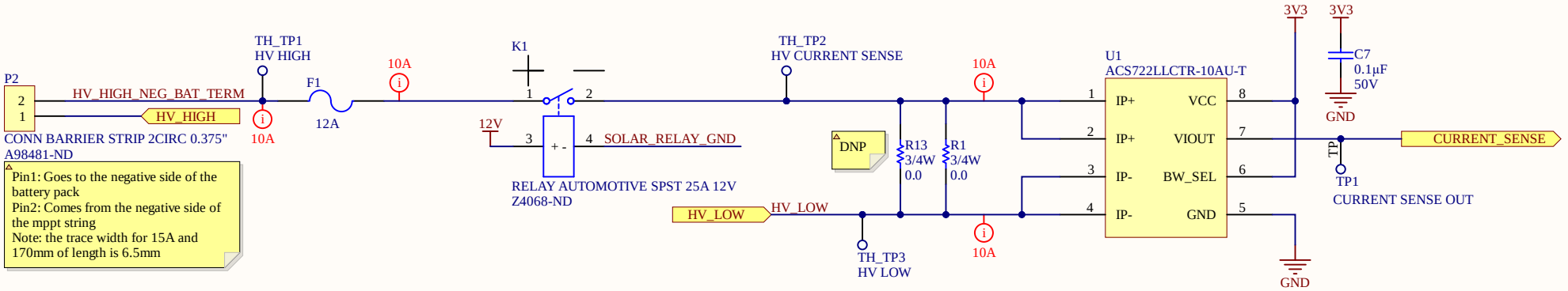

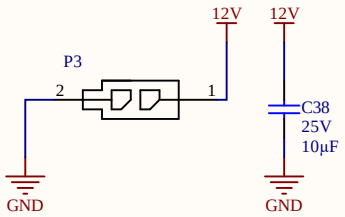

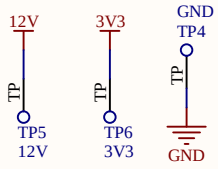

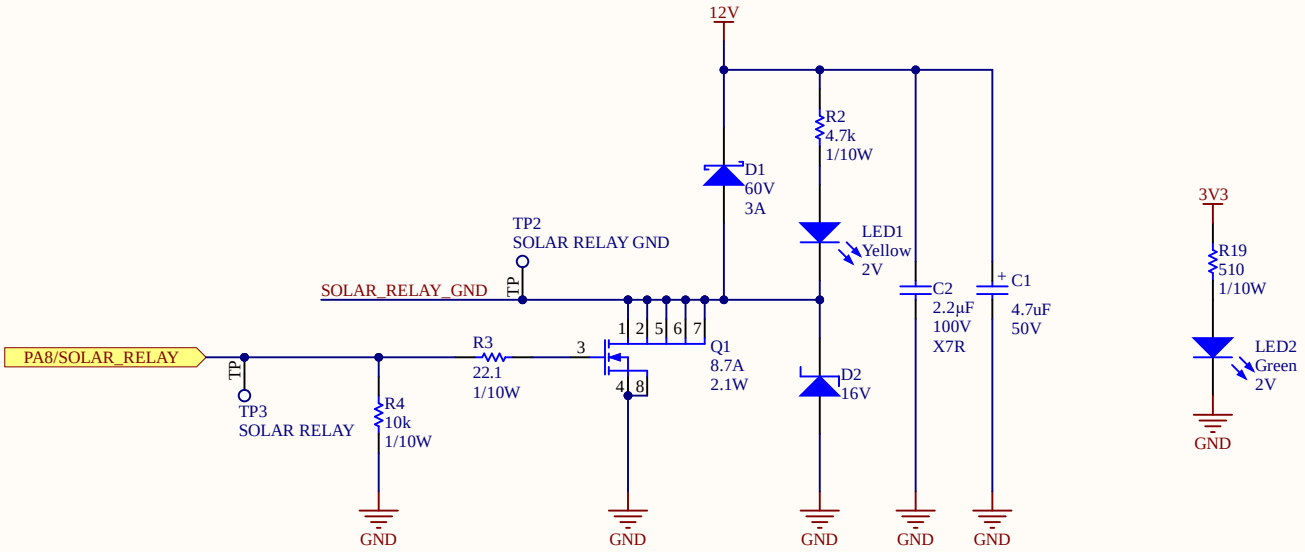

Project: ***MSXIV_SolarSense.PrjPcb***		MIDNIGHT SUN
Title: *		
Project Author: Aashmika Mali		University of Waterloo 200 University Ave W Waterloo, ON, Canada N2L 3E9
Size: Letter	Revision: 1.0	
Date: 2020-02-09	Sheet * of *	Website: www.uwmidsun.com

I2C Interface (for Current Sense)

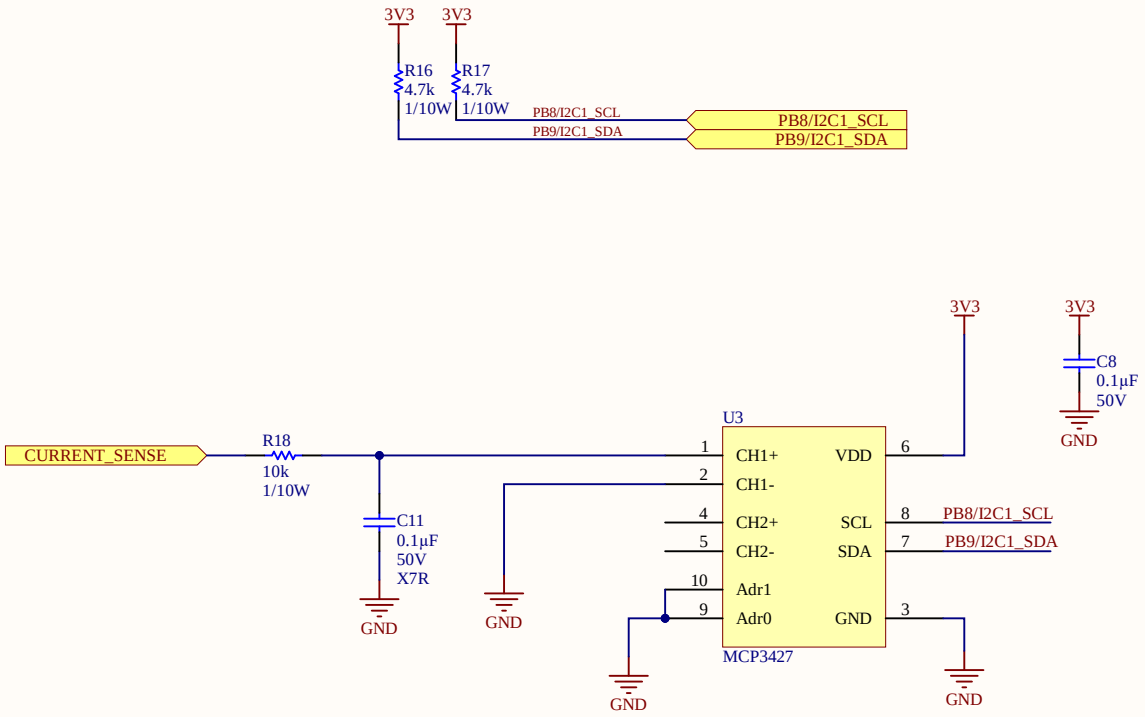

Project: ***MSXIV_SolarSense.PrjPcb***		MIDNIGHT SUN
Title: *		
Project Author: Aashmika Mali		University of Waterloo 200 University Ave W Waterloo, ON, Canada N2L 3E9
Size: Letter	Revision: 1.0	
Date: 2020-02-09	Sheet * of *	Website: www.uwmidsun.com

SPI Isolators

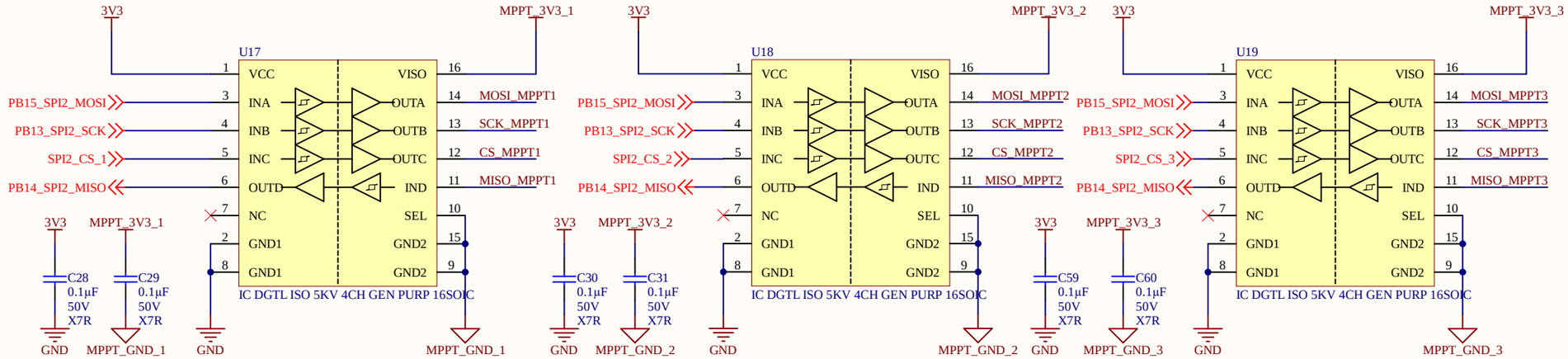

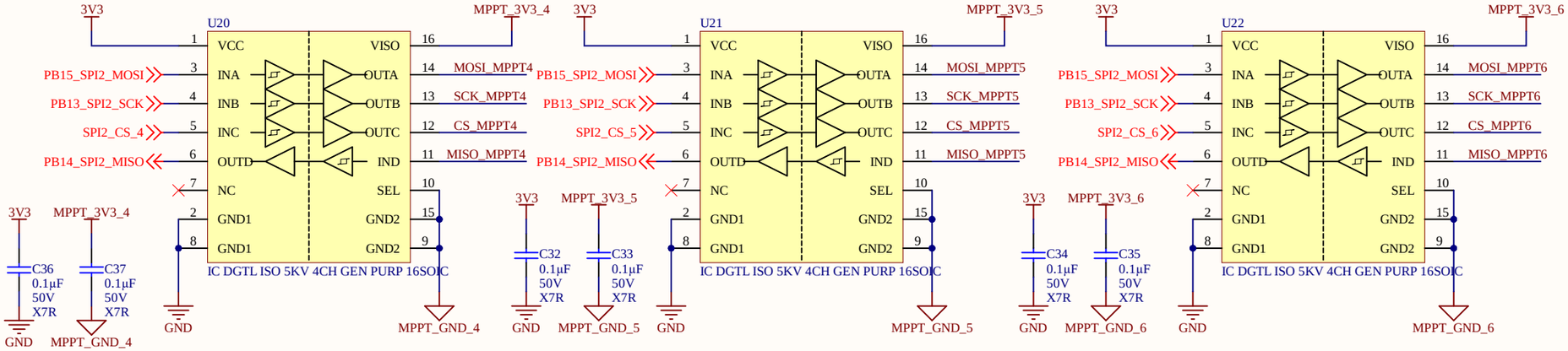

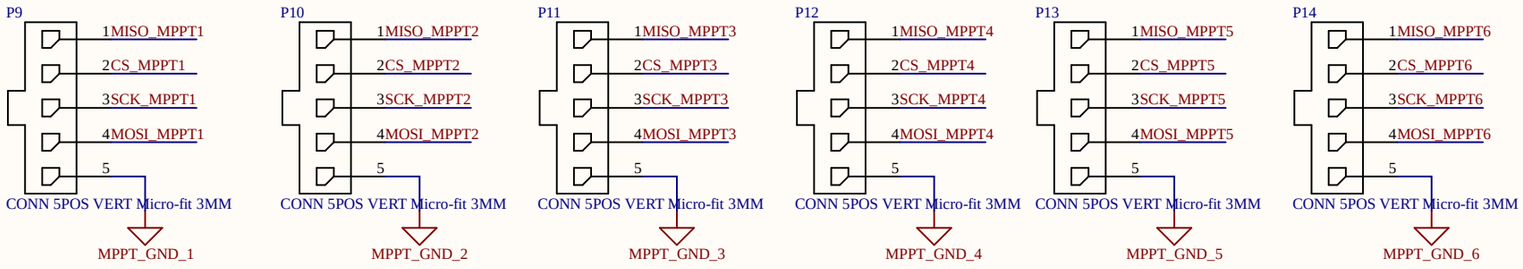

PROJECT	MSXIV_SolarSense.PrjPcb	MIDNIGHT SUN	
DOCUMENT	*		
PART NUMBER		VARIANT	[No Variations]
DRAWN BY	Aashmika Mali	REVISION	1.0
LAST MODIFIED	2020-02-09	SHEET * OF *	

Engineering 5 - 1002
University of Waterloo
(519) 888-4567 x32978
hardware@uwmidsun.com

Temperature Sense for Array Sections

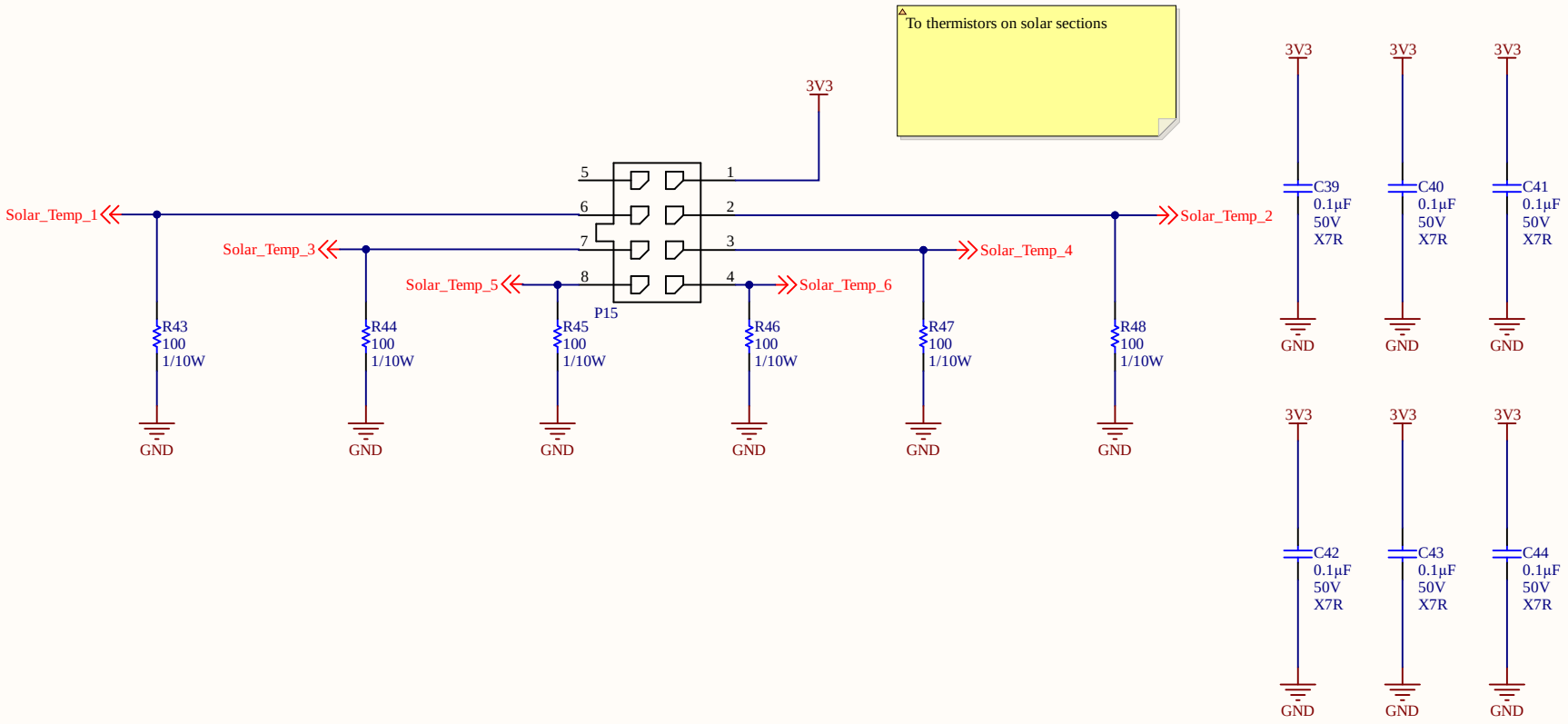

Project: ***MSXIV_SolarSense.PrjPcb***		MIDNIGHT SUN
Title: *		
Project Author: Aashmika Mali		University of Waterloo 200 University Ave W Waterloo, ON, Canada N2L 3E9
Size: Letter	Revision: 1.0	
Date: 2020-02-09	Sheet * of *	Website: www.uwmidsun.com

I2C Isolators for V-Sense

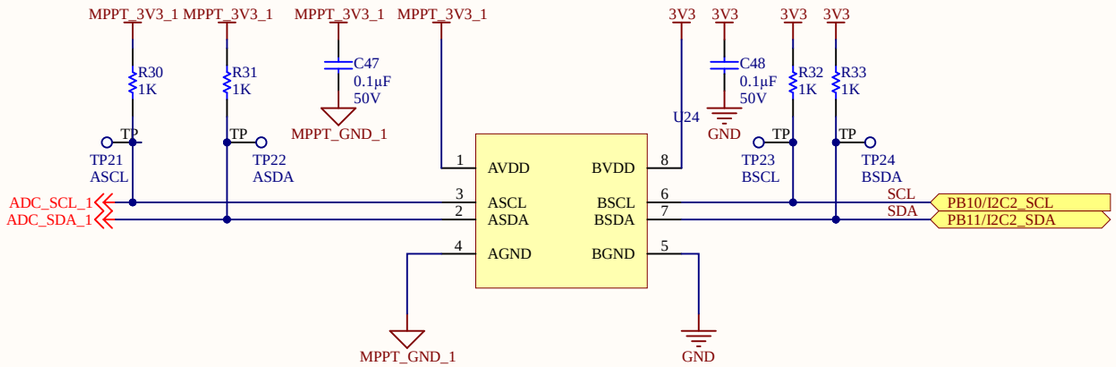

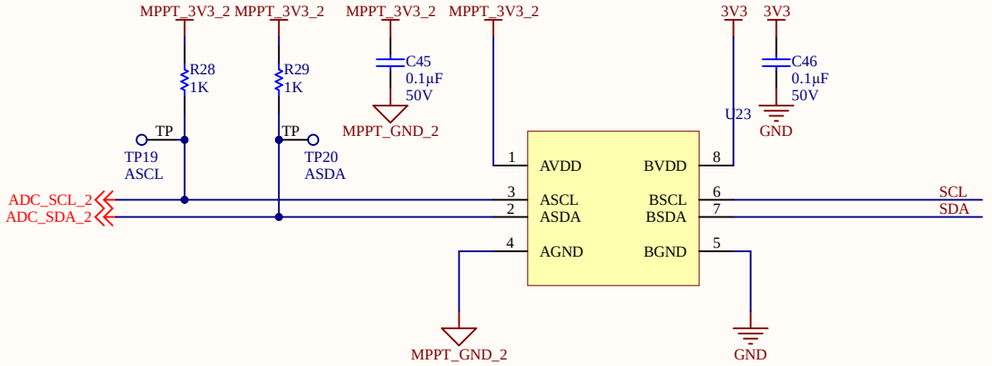

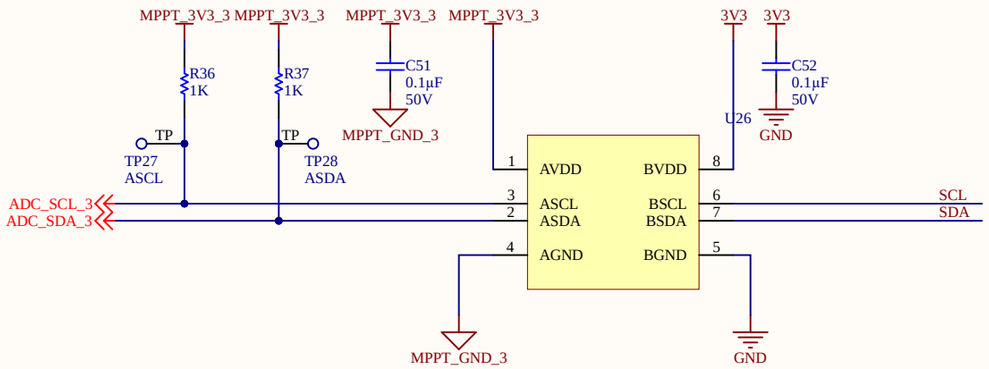

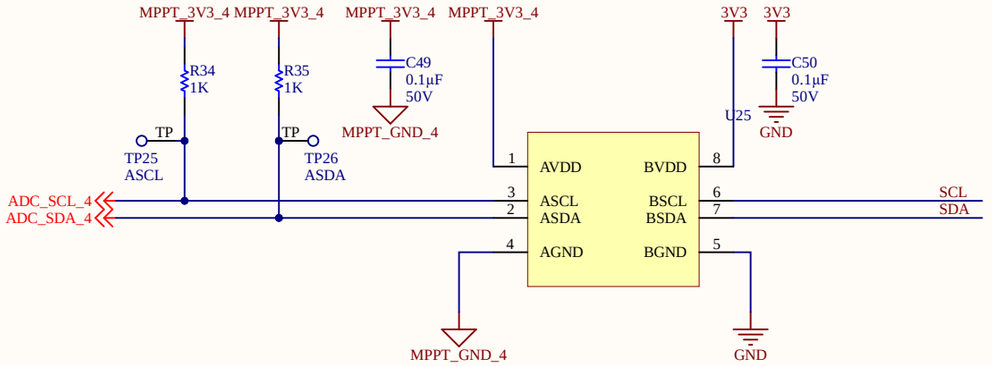

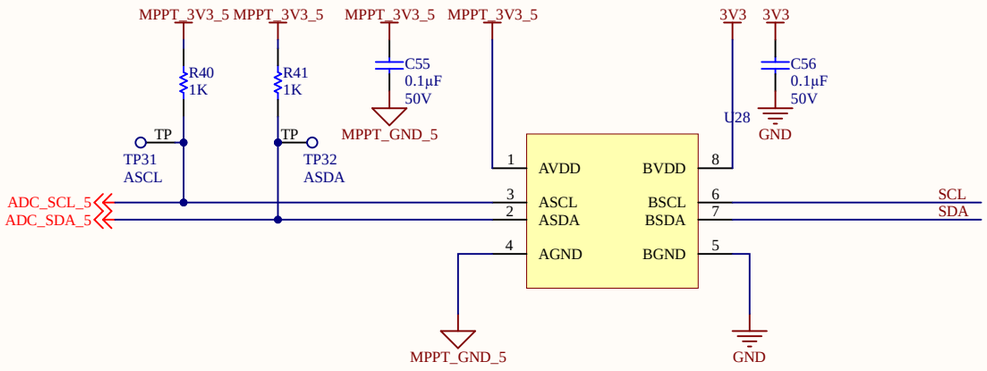

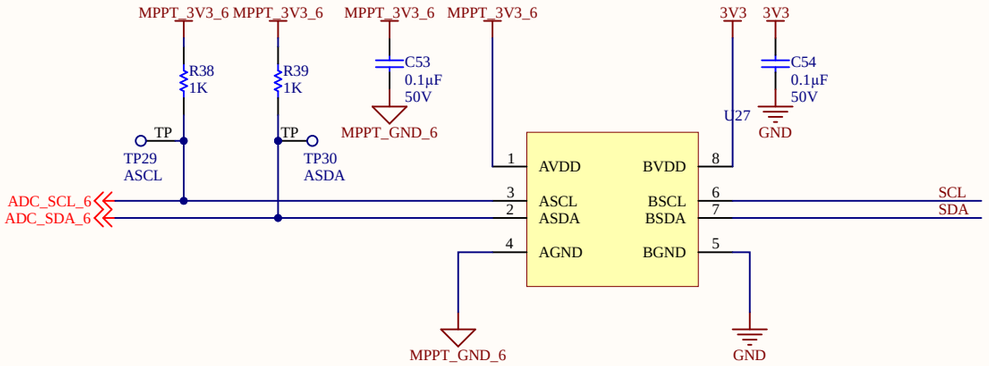

PROJECT	MSXIV_SolarSense.PrjPcb		MIDNIGHT SUN
DOCUMENT	*		
PART NUMBER		VARIANT	[No Variations]
DRAWN BY	Aashmika Mali	REVISION	1.0
LAST MODIFIED	2020-02-09	SHEET	* OF *

Engineering 5 - 1002
University of Waterloo
(519) 888-4567 x32978
hardware@uwmidsun.com

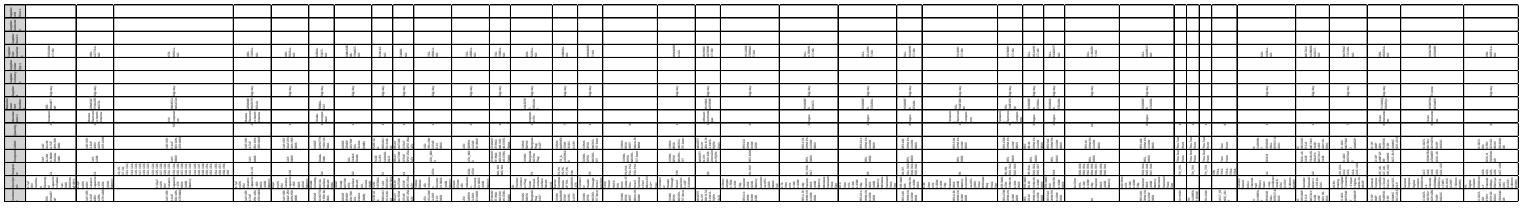

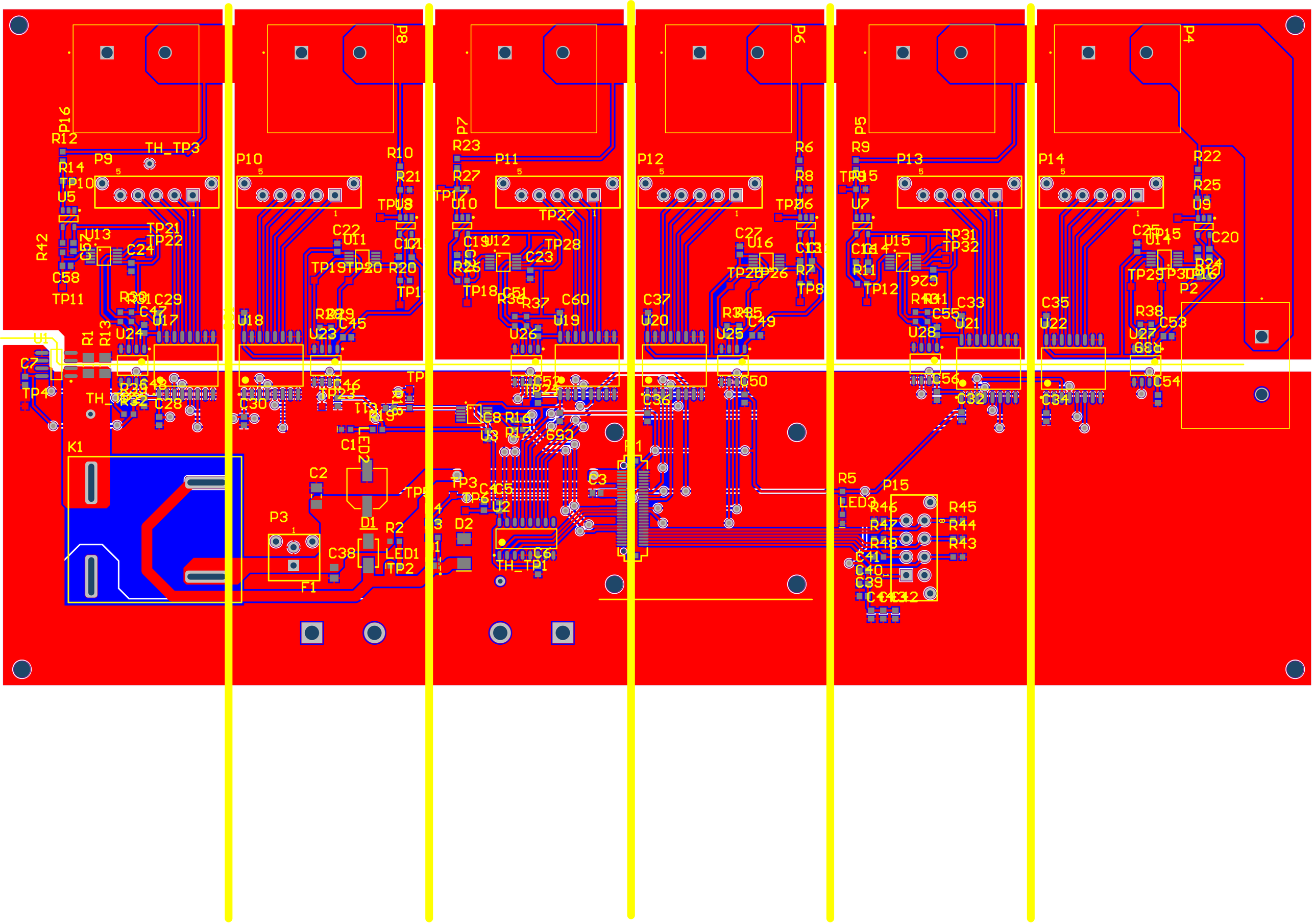

P16
R12
TH_TP3
P9
R14
TP10
U5
R42
U13
TP21
TP22
C24
C58
TP11
C29
C47
U17
U24
R1
R13
U1
C7
TP4
TH_TP
C28
K1
P10
R10
R21
C22
U11
TP19
TP20
R20
TP1
U18
U23
C45
C30
C46
TP23
C1
LED2
C2
TP5
P3
D1
R2
C38
LED1
TP2
F1
P8
P7
R23
P11
R27
TP17
U10
TP27
C19
U12
TP28
C23
TP18
C51
R36
R37
C60
U19
U26
C52
TP24
C8
R16
U3
R17
C59
TP3
C4
C5
TP6
U2
D2
C6
TH_TP1
C3
P12
R6
R8
TP7
C27
U16
TP25
TP26
R7
TP8
C37
U20
U25
C49
C50
C36
P6
P5
R9
P13
TP15
U7
U15
TP31
TP32
C14
R11
TP12
C26
C33
C55
U21
U28
C56
C32
R5
P15
LED3
R46
R47
R48
R45
R44
R43
C41
C40
C39
C42
P14
R22
R25
U9
C25
U14
C20
TP29
TP30
P2
C35
U22
R38
C53
U27
C54
C34
P4

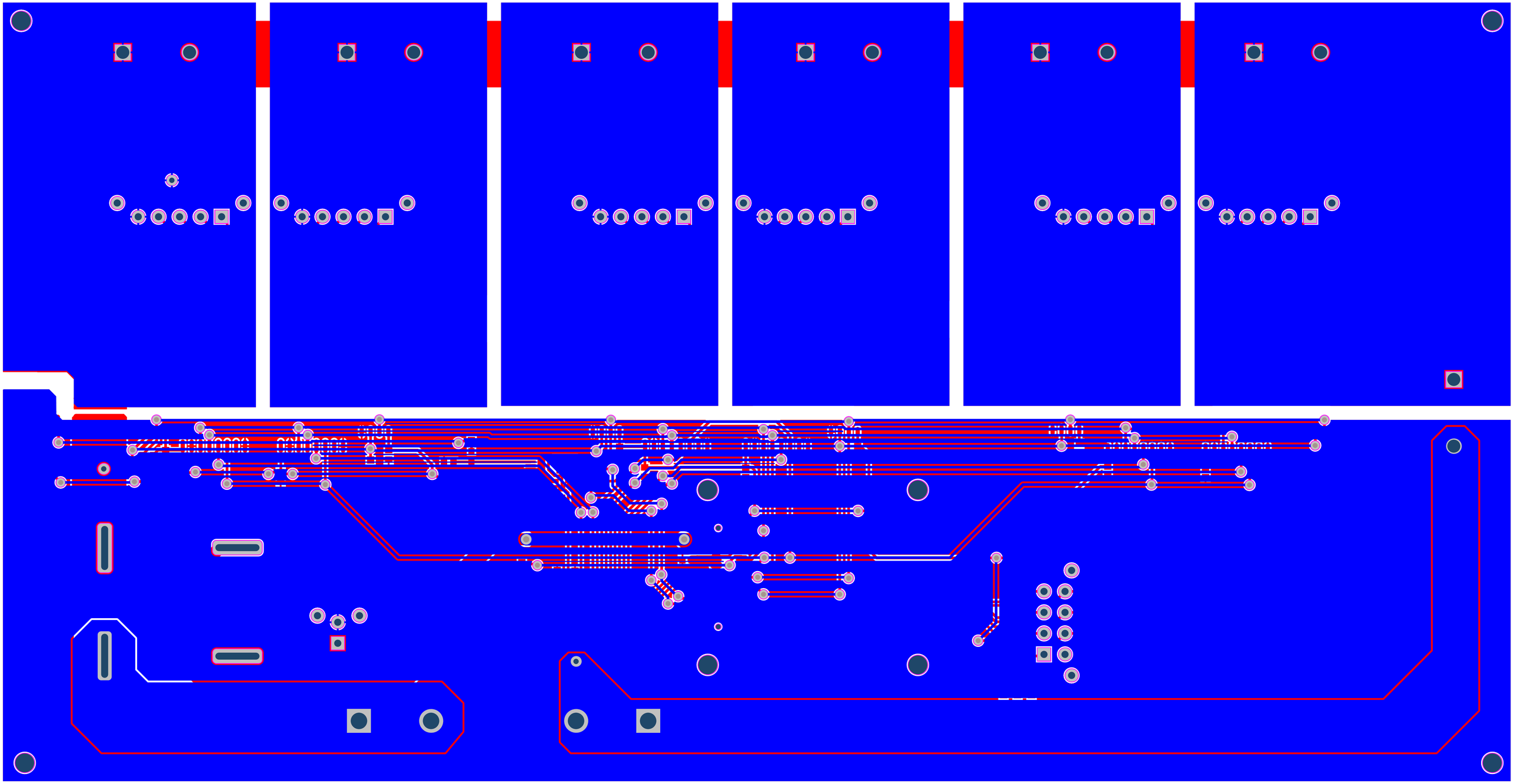

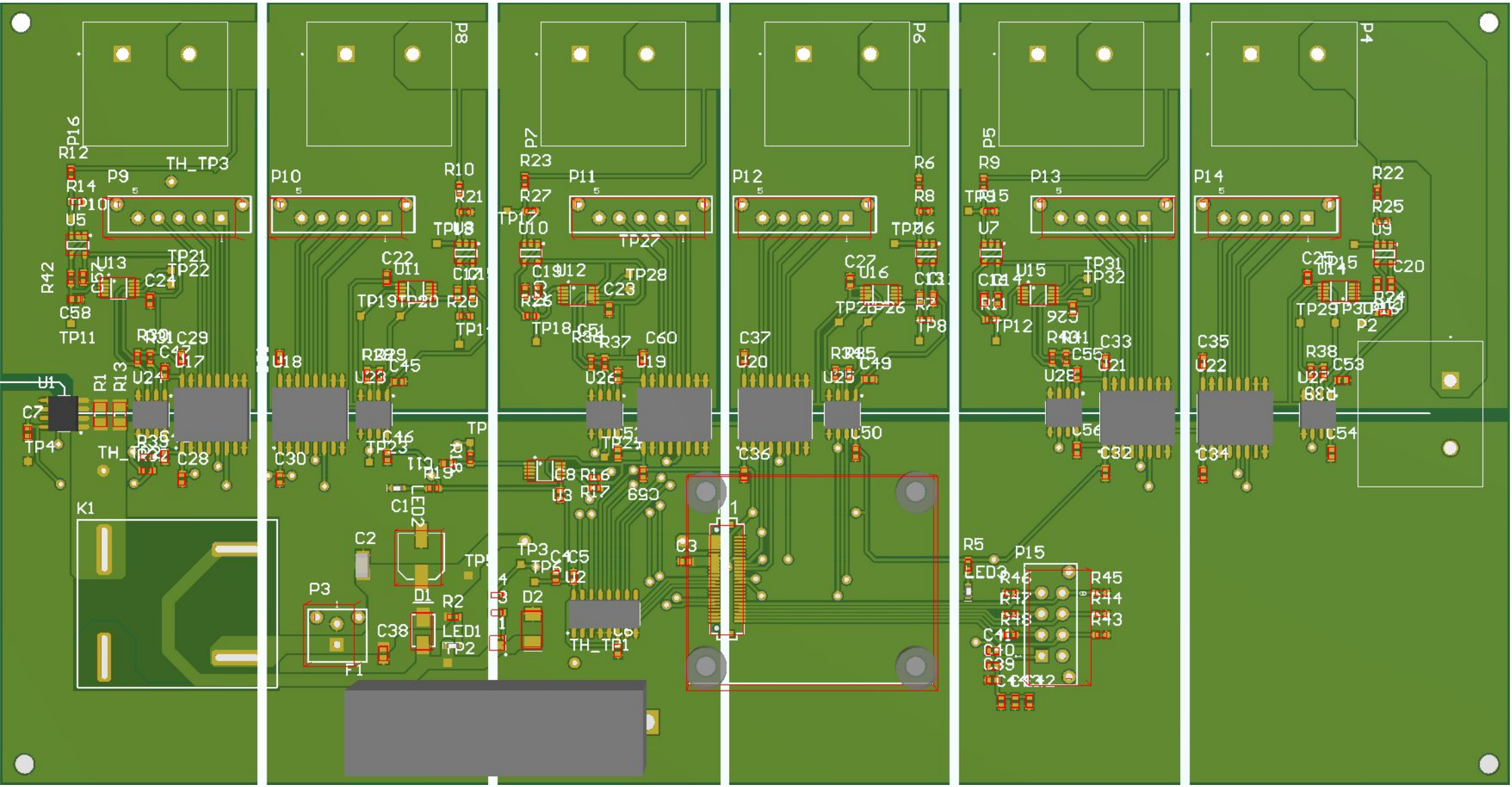
P16
R12
TH_TP3
P9
R14
TP10
U5
R42
U13
TP21
TP22
C24
C58
TP11
C29
U17
U24
U1
R1
R13
C7
TP4
C28
K1
P10
R10
R21
C22
U11
TP19
TP20
R20
C30
C46
TP23
C1
LED2
C2
P3
D1
R2
C38
LED1
TP2
F1
P8
P7
R23
R27
P11
U10
TP27
C19
U12
TP28
C23
TP18
C51
R37
C60
U19
U26
C8
R16
U3
R17
C59
TP3
C4
C5
U2
D2
TH_TP1
C3
P12
R6
R8
C27
U16
C37
U20
C49
C50
C36
P6
P5
R9
P13
U7
U15
TP31
TP32
TP12
C33
U21
U28
C32
R5
P15
LED3
R46
R47
R48
R45
R44
R43
C41
C40
C39
P4
P14
R22
R25
U9
C20
TP29
P2
C35
U22
R38
C53
C54
C34

Electrical Rules Check Report

Class	Document	Message
Error	Voltage_Sense.SchDoc	HV_LOW contains Power Pin and Output Port objects (Pin U5-2, Port HV_LOW).
Error	Controller_Board_Interface.SchDoc	Net PA6/Relay_Sense has only one pin (Pin P1-19)
Error	Controller_Board_Interface.SchDoc	Net PA7_ has only one pin (Pin P1-18)
Error	Controller_Board_Interface.SchDoc	Net PB0_ has only one pin (Pin P1-17)
Error	Controller_Board_Interface.SchDoc	Net PB1_ has only one pin (Pin P1-16)
Error	Controller_Board_Interface.SchDoc	Net PB2_ has only one pin (Pin P1-15)
Warning	Voltage_Sense.SchDoc	Global Power-Object MPPT_GND_1 at 3650mil,1830mil has been reduced to local level by presence of port at 2000mil,1300mil
Warning	Voltage_Sense.SchDoc	Global Power-Object MPPT_HV_6 at 3350mil,9100mil has been reduced to local level by presence of port at 2000mil,9400mil
Warning	Voltage_Sense.SchDoc	Net NetR6_2 has no driving source (Pin R6-2, Pin R8-1, Pin TP7-TP, Pin U6-3)
Warning	Voltage_Sense.SchDoc	Net NetR9_2 has no driving source (Pin R9-2, Pin R15-1, Pin TP9-TP, Pin U7-3)
Warning	Voltage_Sense.SchDoc	Net NetR10_2 has no driving source (Pin R10-2, Pin R21-1, Pin TP13-TP, Pin U8-3)
Warning	Voltage_Sense.SchDoc	Net NetR12_2 has no driving source (Pin R12-2, Pin R14-1, Pin TP10-TP, Pin U5-3)
Warning	Voltage_Sense.SchDoc	Net NetR22_2 has no driving source (Pin R22-2, Pin R25-1, Pin TP15-TP, Pin U9-3)
Warning	Voltage_Sense.SchDoc	Net NetR23_2 has no driving source (Pin R23-2, Pin R27-1, Pin TP17-TP, Pin U10-3)
Warning	Controller_Board_Interface.SchDoc	Net PB3_DEMUX_A0 has no driving source (Pin P1-38, Pin U2-1)
Warning	Controller_Board_Interface.SchDoc	Net PB4_DEMUX_A1 has no driving source (Pin P1-37, Pin U2-2)
Warning	Controller_Board_Interface.SchDoc	Net PB5_DEMUX_A2 has no driving source (Pin P1-36, Pin U2-3)
Warning	Current_and_Relay_Sense.SchDoc	Nets Wire HV_HIGH has multiple names (Net Label HV_HIGH, Power Object MPPT_HV_6, Power Object MPPT_HV_6)
Warning	ADCs.SchDoc	Nets Wire HV_LOW has multiple names (Net Label HV_LOW, Net Label HV_LOW, Power Object MPPT_GND_1, Power Object MPPT_GND_1, Power Object MPPT_GND_1, Power Object MPPT_GND_1, Power Object MPPT_GND_1, Power Object MPPT_GND_1, Power Object MPPT_GND_1, Power Object MPPT_GND_1, Power Object MPPT_GND_1, Power Object MPPT_GND_1, Power Object MPPT_GND_1, Power Object MPPT_GND_1, Power Object MPPT_GND_1)
Warning	ADCs.SchDoc	Nets Wire MPPT_GND_2 has multiple names (Power Object MPPT_GND_2, Power Object MPPT_GND_2, Power Object MPPT_GND_2, Power Object MPPT_GND_2, Power Object MPPT_GND_2, Power Object MPPT_GND_2, Power Object MPPT_GND_2, Power Object MPPT_GND_2, Power Object MPPT_GND_2, Power Object MPPT_GND_2, Power Object MPPT_GND_2, Power Object MPPT_GND_2, Power Object MPPT_GND_2, Power Object MPPT_GND_2, Power Object MPPT_HV_1, Power Object MPPT_HV_1)
Warning	ADCs.SchDoc	Nets Wire MPPT_GND_3 has multiple names (Power Object MPPT_GND_3, Power Object MPPT_GND_3, Power Object MPPT_GND_3, Power Object MPPT_GND_3, Power Object MPPT_GND_3, Power Object MPPT_GND_3, Power Object MPPT_GND_3, Power Object MPPT_GND_3, Power Object MPPT_GND_3, Power Object MPPT_GND_3, Power Object MPPT_GND_3, Power Object MPPT_GND_3, Power Object MPPT_GND_3, Power Object MPPT_GND_3, Power Object MPPT_HV_2, Power Object MPPT_HV_2)
Warning	ADCs.SchDoc	Nets Wire MPPT_GND_4 has multiple names (Power Object MPPT_GND_4, Power Object MPPT_GND_4, Power Object MPPT_GND_4, Power Object MPPT_GND_4, Power Object MPPT_GND_4, Power Object MPPT_GND_4, Power Object MPPT_GND_4, Power Object MPPT_GND_4, Power Object MPPT_GND_4, Power Object MPPT_GND_4, Power Object MPPT_GND_4, Power Object MPPT_GND_4, Power Object MPPT_GND_4, Power Object MPPT_GND_4, Power Object MPPT_HV_3, Power Object MPPT_HV_3)
Warning	ADCs.SchDoc	Nets Wire MPPT_GND_5 has multiple names (Power Object MPPT_GND_5, Power Object MPPT_GND_5, Power Object MPPT_GND_5, Power Object MPPT_GND_5, Power Object MPPT_GND_5, Power Object MPPT_GND_5, Power Object MPPT_GND_5, Power Object MPPT_GND_5, Power Object MPPT_GND_5, Power Object MPPT_GND_5, Power Object MPPT_GND_5, Power Object MPPT_GND_5, Power Object MPPT_GND_5, Power Object MPPT_GND_5, Power Object MPPT_HV_4, Power Object MPPT_HV_4)
Warning	ADCs.SchDoc	Nets Wire MPPT_GND_6 has multiple names (Power Object MPPT_GND_6, Power Object MPPT_GND_6, Power Object MPPT_GND_6, Power Object MPPT_GND_6, Power Object MPPT_GND_6, Power Object MPPT_GND_6, Power Object MPPT_GND_6, Power Object MPPT_GND_6, Power Object MPPT_GND_6, Power Object MPPT_GND_6, Power Object MPPT_GND_6, Power Object MPPT_GND_6, Power Object MPPT_GND_6, Power Object MPPT_GND_6, Power Object MPPT_HV_5, Power Object MPPT_HV_5)
Warning	Controller_Board_Interface.SchDoc	Nets Wire PA0_Temp_1 has multiple names (Cross-Sheet Connector Solar_Temp_1, Cross-Sheet Connector Solar_Temp_1, Net Label PA0_Temp_1)
Warning	Controller_Board_Interface.SchDoc	Nets Wire PA1_Temp_2 has multiple names (Cross-Sheet Connector Solar_Temp_2, Cross-Sheet Connector Solar_Temp_2, Net Label PA1_Temp_2)

Class	Document	Message
Warning	Controller_Board_Interface.SchDoc	Nets Wire PA2_Temp_3 has multiple names (Cross-Sheet Connector Solar_Temp_3, Cross-Sheet Connector Solar_Temp_3, Net Label PA2_Temp_3)
Warning	Controller_Board_Interface.SchDoc	Nets Wire PA3_Temp_4 has multiple names (Cross-Sheet Connector Solar_Temp_4, Cross-Sheet Connector Solar_Temp_4, Net Label PA3_Temp_4)
Warning	Controller_Board_Interface.SchDoc	Nets Wire PA4_Temp_5 has multiple names (Cross-Sheet Connector Solar_Temp_5, Cross-Sheet Connector Solar_Temp_5, Net Label PA4_Temp_5)
Warning	Controller_Board_Interface.SchDoc	Nets Wire PA5_Temp_6 has multiple names (Cross-Sheet Connector Solar_Temp_6, Cross-Sheet Connector Solar_Temp_6, Net Label PA5_Temp_6)
Warning	Controller_Board_Interface.SchDoc	Nets Wire PB10/I2C2_SCL has multiple names (Net Label PB10/I2C2_SCL, Net Label SCL, Net Label SCL, Net Label SCL, Net Label SCL, Net Label SCL, Net Label SCL)
Warning	Controller_Board_Interface.SchDoc	Nets Wire PB11/I2C2_SDA has multiple names (Net Label PB11/I2C2_SDA, Net Label SDA, Net Label SDA, Net Label SDA, Net Label SDA, Net Label SDA, Net Label SDA)
Warning	ADCs.SchDoc	Off grid C24 at 3818.11mil,8674.41mil
Warning	ADCs.SchDoc	Off grid Cross-Sheet Connector ADC_SCL_1 at 3600mil,7694.41mil
Warning	ADCs.SchDoc	Off grid Cross-Sheet Connector ADC_SDA_1 at 3600mil,7544.41mil
Warning	SPI_Interface.SchDoc	Off grid Cross-Sheet Connector PB13_SPI2_SCK at 6574.41mil,6651.811mil
Warning	SPI_Interface.SchDoc	Off grid Cross-Sheet Connector PB14_SPI2_MISO at 6574.41mil,6251.811mil
Warning	SPI_Interface.SchDoc	Off grid Cross-Sheet Connector PB15_SPI2_MOSI at 6574.41mil,6851.811mil
Warning	TemperatureSense.SchDoc	Off grid Cross-Sheet Connector Solar_Temp_2 at 7837.008mil,4796.063mil
Warning	TemperatureSense.SchDoc	Off grid Cross-Sheet Connector Solar_Temp_4 at 6687.008mil,4596.063mil
Warning	Controller_Board_Interface.SchDoc	Off grid Cross-Sheet Connector Solar_Temp_6 at 2247.008mil,4300mil
Warning	TemperatureSense.SchDoc	Off grid Cross-Sheet Connector Solar_Temp_6 at 5650mil,4396.063mil
Warning	ADCs.SchDoc	Off grid Cross-Sheet Connector V_SENSE_1 at 1350mil,8044.41mil
Warning	ADCs.SchDoc	Off grid Cross-Sheet Connector V_SENSE_2 at 6281.89mil,8100mil
Warning	ADCs.SchDoc	Off grid Cross-Sheet Connector V_SENSE_3 at 11381.89mil,8100mil
Warning	ADCs.SchDoc	Off grid Cross-Sheet Connector V_SENSE_4 at 1631.89mil,3500mil
Warning	ADCs.SchDoc	Off grid Cross-Sheet Connector V_SENSE_5 at 6531.89mil,3500mil
Warning	ADCs.SchDoc	Off grid Cross-Sheet Connector V_SENSE_6 at 11231.89mil,3400mil
Warning	Controller_Board_Interface.SchDoc	Off grid M1 at 1693.983mil,2899.713mil
Warning	Controller_Board_Interface.SchDoc	Off grid M2 at 2406.601mil,2898.306mil
Warning	Controller_Board_Interface.SchDoc	Off grid M3 at 1693.983mil,1949.714mil
Warning	Controller_Board_Interface.SchDoc	Off grid M4 at 2406.601mil,1948.306mil
Warning	SPI_Interface.SchDoc	Off grid Net Label CS_MPPT2 at 8674.41mil,6451.811mil
Warning	SPI_Interface.SchDoc	Off grid Net Label MISO_MPPT2 at 8624.41mil,6251.811mil
Warning	SPI_Interface.SchDoc	Off grid Net Label MISO_MPPT3 at 12055.512mil,6250mil
Warning	SPI_Interface.SchDoc	Off grid Net Label MOSI_MPPT2 at 8674.41mil,6851.811mil
Warning	SPI_Interface.SchDoc	Off grid Net Label MOSI_MPPT3 at 12055.512mil,6850mil
Warning	SPI_Interface.SchDoc	Off grid Net Label SCK_MPPT2 at 8674.41mil,6651.811mil
Warning	SPI_Interface.SchDoc	Off grid No ERC at 6774.41mil,6051.811mil
Warning	TemperatureSense.SchDoc	Off grid P15 at 4521.654mil,5096.063mil
Warning	ADCs.SchDoc	Off grid Pin C24-1 at 3818.11mil,8674.41mil
Warning	ADCs.SchDoc	Off grid Pin C24-2 at 3818.11mil,8374.41mil
Warning	TemperatureSense.SchDoc	Off grid Pin P15-1 at 5421.654mil,4996.063mil
Warning	TemperatureSense.SchDoc	Off grid Pin P15-2 at 5421.654mil,4796.063mil
Warning	TemperatureSense.SchDoc	Off grid Pin P15-3 at 5421.654mil,4596.063mil
Warning	TemperatureSense.SchDoc	Off grid Pin P15-4 at 5421.654mil,4396.063mil
Warning	TemperatureSense.SchDoc	Off grid Pin P15-5 at 4521.654mil,4996.063mil
Warning	TemperatureSense.SchDoc	Off grid Pin P15-6 at 4521.654mil,4796.063mil
Warning	TemperatureSense.SchDoc	Off grid Pin P15-7 at 4521.654mil,4596.063mil
Warning	TemperatureSense.SchDoc	Off grid Pin P15-8 at 4521.654mil,4396.063mil
Warning	ADCs.SchDoc	Off grid Pin U13-1 at 1658.11mil,8044.41mil
Warning	ADCs.SchDoc	Off grid Pin U13-2 at 1658.11mil,7894.41mil
Warning	ADCs.SchDoc	Off grid Pin U13-3 at 3108.11mil,7194.41mil
Warning	ADCs.SchDoc	Off grid Pin U13-4 at 1658.11mil,7694.41mil
Warning	ADCs.SchDoc	Off grid Pin U13-5 at 1658.11mil,7544.41mil
Warning	ADCs.SchDoc	Off grid Pin U13-6 at 3108.11mil,8044.41mil
Warning	ADCs.SchDoc	Off grid Pin U13-7 at 3108.11mil,7544.41mil
Warning	ADCs.SchDoc	Off grid Pin U13-8 at 3108.11mil,7694.41mil
Warning	ADCs.SchDoc	Off grid Pin U13-9 at 1658.11mil,7194.41mil
Warning	ADCs.SchDoc	Off grid Pin U13-10 at 1658.11mil,7344.41mil
Warning	SPI_Interface.SchDoc	Off grid Pin U18-1 at 6774.41mil,7051.811mil
Warning	SPI_Interface.SchDoc	Off grid Pin U18-2 at 6774.41mil,5851.811mil
Warning	SPI_Interface.SchDoc	Off grid Pin U18-3 at 6774.41mil,6851.811mil

Class	Document	Message
Warning	SPI_Interface.SchDoc	Off grid Pin U18-4 at 6774.41mil,6651.811mil
Warning	SPI_Interface.SchDoc	Off grid Pin U18-5 at 6774.41mil,6451.811mil
Warning	SPI_Interface.SchDoc	Off grid Pin U18-6 at 6774.41mil,6251.811mil
Warning	SPI_Interface.SchDoc	Off grid Pin U18-7 at 6774.41mil,6051.811mil
Warning	SPI_Interface.SchDoc	Off grid Pin U18-8 at 6774.41mil,5651.811mil
Warning	SPI_Interface.SchDoc	Off grid Pin U18-9 at 8574.41mil,5651.811mil
Warning	SPI_Interface.SchDoc	Off grid Pin U18-10 at 8574.41mil,6051.811mil
Warning	SPI_Interface.SchDoc	Off grid Pin U18-11 at 8574.41mil,6251.811mil
Warning	SPI_Interface.SchDoc	Off grid Pin U18-12 at 8574.41mil,6451.811mil
Warning	SPI_Interface.SchDoc	Off grid Pin U18-13 at 8574.41mil,6651.811mil
Warning	SPI_Interface.SchDoc	Off grid Pin U18-14 at 8574.41mil,6851.811mil
Warning	SPI_Interface.SchDoc	Off grid Pin U18-15 at 8574.41mil,5851.811mil
Warning	SPI_Interface.SchDoc	Off grid Pin U18-16 at 8574.41mil,7051.811mil
Warning	TemperatureSense.SchDoc	Off grid Power Object 3V3 at 5899.606mil,5389.764mil
Warning	SPI_Interface.SchDoc	Off grid Power Object 3V3 at 6174.41mil,7351.811mil
Warning	SPI_Interface.SchDoc	Off grid Power Object GND at 6774.41mil,5351.811mil
Warning	ADCs.SchDoc	Off grid Power Object MPPT_3V3_1 at 3218.11mil,8674.41mil
Warning	ADCs.SchDoc	Off grid Power Object MPPT_3V3_1 at 3818.11mil,8674.41mil
Warning	SPI_Interface.SchDoc	Off grid Power Object MPPT_3V3_2 at 9074.41mil,7351.811mil
Warning	ADCs.SchDoc	Off grid Power Object MPPT_GND_1 at 818.11mil,7074.41mil
Warning	ADCs.SchDoc	Off grid Power Object MPPT_GND_1 at 3468.11mil,7074.41mil
Warning	ADCs.SchDoc	Off grid Power Object MPPT_GND_1 at 3818.11mil,8374.41mil
Warning	SPI_Interface.SchDoc	Off grid Power Object MPPT_GND_2 at 8574.41mil,5351.811mil
Warning	ADCs.SchDoc	Off grid U13 at 1958.11mil,8194.41mil
Warning	SPI_Interface.SchDoc	Off grid U18 at 7474.41mil,6651.811mil

Design Rules Verification Report

Filename : C:\Users\Aashmika Mali\Documents\First Year\Midnight Sun\hardware\MSXIV_

Warnings 0
Rule Violations 500

Warnings	
Total	0

Rule Violations	
Clearance Constraint (Gap=10mil) (All),(All)	0
Short-Circuit Constraint (Allowed=No) (All),(All)	0
Un-Routed Net Constraint ((All))	0
Modified Polygon (Allow modified: No), (Allow shelved: No)	0
Width Constraint (Min=10mil) (Max=70mil) (Preferred=15mil) (All)	0
Power Plane Connect Rule(Relief Connect)(Expansion=20mil) (Conductor Width=10mil) (Air Gap=10mil) (Entries=4)	0
Hole Size Constraint (Min=1mil) (Max=100mil) (All)	9
Hole To Hole Clearance (Gap=10mil) (All),(All)	0
Minimum Solder Mask Sliver (Gap=10mil) (All),(All)	42
Silk To Solder Mask (Clearance=10mil) (IsPad),(All)	304
Silk to Silk (Clearance=10mil) (All),(All)	142
Net Antennae (Tolerance=0mil) (All)	3
Height Constraint (Min=0mil) (Max=1000mil) (Prefered=500mil) (All)	0
Total	500

Hole Size Constraint (Min=1mil) (Max=100mil) (All)
Hole Size Constraint: (106.299mil > 100mil) Pad Free-(118.11mil,-118.11mil) on Multi-Layer Actual Hole Size = 106.299mi
Hole Size Constraint: (106.299mil > 100mil) Pad Free-(137.795mil,-4291.339mil) on Multi-Layer Actual Hole Size = 106.299mi
Hole Size Constraint: (106.299mil > 100mil) Pad Free-(3976.378mil,-3740.158mil) on Multi-Layer Actual Hole Size = 106.299mi
Hole Size Constraint: (106.299mil > 100mil) Pad Free-(8385.827mil,-118.11mil) on Multi-Layer Actual Hole Size = 106.299mi
Hole Size Constraint: (106.299mil > 100mil) Pad Free-(8385.827mil,-4291.339mil) on Multi-Layer Actual Hole Size = 106.299mi
Hole Size Constraint: (248.031mil > 100mil) Pad K1-1(586.969mil,-3688.976mil) on Multi-Layer Actual Slot Hole Height = 248.031mi
Hole Size Constraint: (248.031mil > 100mil) Pad K1-2(586.969mil,-3082.677mil) on Multi-Layer Actual Slot Hole Height = 248.031mi
Hole Size Constraint: (248.031mil > 100mil) Pad K1-3(1333.032mil,-3690.945mil) on Multi-Layer Actual Slot Hole Height = 248.031mi
Hole Size Constraint: (248.031mil > 100mil) Pad K1-4(1333.032mil,-3080.709mil) on Multi-Layer Actual Slot Hole Height = 248.031mi

Minimum Solder Mask Sliver (Gap=10mil) (All),(All)
Minimum Solder Mask Sliver Constraint: (3.315mil < 10mil) Between Pad C59-1(3622mil,-2629.425mil) on Top Layer And Via (3567mil,-2634.892mil) from
Minimum Solder Mask Sliver Constraint: (5.724mil < 10mil) Between Pad C59-2(3622mil,-2682.575mil) on Top Layer And Via (3567mil,-2716mil) from Top
Minimum Solder Mask Sliver Constraint: (4.145mil < 10mil) Between Pad P1-(4035.433mil,-2970.472mil) on Multi-Layer And Pac
Minimum Solder Mask Sliver Constraint: (4.145mil < 10mil) Between Pad P1-(4035.433mil,-3525.591mil) on Multi-Layer And Pac
Minimum Solder Mask Sliver Constraint: (2.984mil < 10mil) Between Pad P1-10(4165.355mil,-3188.977mil) on Top Layer And Via (4098.961mil,-3179.5mil)
Minimum Solder Mask Sliver Constraint: (3.155mil < 10mil) Between Pad P1-9(4165.355mil,-3169.292mil) on Top Layer And Via (4098.961mil,-3179.5mil)
Minimum Solder Mask Sliver Constraint: (1.842mil < 10mil) Between Pad Q1-1(2837.74mil,-3633.181mil) on Top Layer And Pac
Minimum Solder Mask Sliver Constraint: (1.843mil < 10mil) Between Pad Q1-2(2837.74mil,-3607.591mil) on Top Layer And Pad
Minimum Solder Mask Sliver Constraint: (1.843mil < 10mil) Between Pad Q1-3(2837.74mil,-3582mil) on Top Layer And Pac
Minimum Solder Mask Sliver Constraint: (7.945mil < 10mil) Between Pad Q1-3(2837.74mil,-3582mil) on Top Layer And Pac
Minimum Solder Mask Sliver Constraint: (1.843mil < 10mil) Between Pad Q1-4(2764.905mil,-3582mil) on Top Layer And Pac
Minimum Solder Mask Sliver Constraint: (1.843mil < 10mil) Between Pad Q1-4(2764.905mil,-3582mil) on Top Layer And Pac
Minimum Solder Mask Sliver Constraint: (7.945mil < 10mil) Between Pad Q1-4(2764.905mil,-3582mil) on Top Layer And Pac
Minimum Solder Mask Sliver Constraint: (1.842mil < 10mil) Between Pad Q1-5(2764.905mil,-3607.591mil) on Top Layer And Pac
Minimum Solder Mask Sliver Constraint: (7.354mil < 10mil) Between Pad Q1-7(2801.322mil,-3619.402mil) on Top Layer And Pac
Minimum Solder Mask Sliver Constraint: (5.696mil < 10mil) Between Pad R33-2(798.819mil,-2559.055mil) on Top Layer And Via (744mil,-2531.85mil) from
Minimum Solder Mask Sliver Constraint: (2.829mil < 10mil) Between Pad TP24-TP(3405.512mil,-2562.008mil) on Top Layer And Via (3350mil,-2538mil)
Minimum Solder Mask Sliver Constraint: (5.78mil < 10mil) Between Pad U10-1(3027.559mil,-1363.189mil) on Top Layer And Pac
Minimum Solder Mask Sliver Constraint: (5.779mil < 10mil) Between Pad U10-2(2990.158mil,-1363.189mil) on Top Layer And Pac
Minimum Solder Mask Sliver Constraint: (5.283mil < 10mil) Between Pad U20-5(4389.764mil,-2509.843mil) on Top Layer And Via (4388.114mil,-2585.5mil)
Minimum Solder Mask Sliver Constraint: (2.161mil < 10mil) Between Pad U22-4(6924mil,-2529.708mil) on Top Layer And Via (6922.181mil,-2457.181mil)
Minimum Solder Mask Sliver Constraint: (8.425mil < 10mil) Between Pad U23-7(2131.3mil,-2430.118mil) on Top Layer And Via (2131.15mil,-2360.15mil)
Minimum Solder Mask Sliver Constraint: (7.592mil < 10mil) Between Pad U24-7(879.331mil,-2430.118mil) on Top Layer And Via (878mil,-2361mil) from
Minimum Solder Mask Sliver Constraint: (6.429mil < 10mil) Between Pad U26-7(3430.512mil,-2430.118mil) on Top Layer And Via
Minimum Solder Mask Sliver Constraint: (6.37mil < 10mil) Between Pad U27-7(7442.323mil,-2430.118mil) on Top Layer And Via
Minimum Solder Mask Sliver Constraint: (5.78mil < 10mil) Between Pad U5-1(476.969mil,-1317.677mil) on Top Layer And Pac
Minimum Solder Mask Sliver Constraint: (5.779mil < 10mil) Between Pad U5-2(439.567mil,-1317.677mil) on Top Layer And Pac
Minimum Solder Mask Sliver Constraint: (5.78mil < 10mil) Between Pad U6-1(5253.937mil,-1363.189mil) on Top Layer And Pac
Minimum Solder Mask Sliver Constraint: (5.779mil < 10mil) Between Pad U6-2(5216.536mil,-1363.189mil) on Top Layer And Pac
Minimum Solder Mask Sliver Constraint: (5.78mil < 10mil) Between Pad U7-1(5619.095mil,-1363.189mil) on Top Layer And Pac
Minimum Solder Mask Sliver Constraint: (5.779mil < 10mil) Between Pad U7-2(5581.693mil,-1363.189mil) on Top Layer And Pac
Minimum Solder Mask Sliver Constraint: (5.78mil < 10mil) Between Pad U8-1(2661.615mil,-1363.189mil) on Top Layer And Pac
Minimum Solder Mask Sliver Constraint: (5.779mil < 10mil) Between Pad U8-2(2624.213mil,-1363.189mil) on Top Layer And Pac
Minimum Solder Mask Sliver Constraint: (5.78mil < 10mil) Between Pad U9-1(7830.709mil,-1368.11mil) on Top Layer And Pac
Minimum Solder Mask Sliver Constraint: (5.779mil < 10mil) Between Pad U9-2(7793.307mil,-1368.11mil) on Top Layer And Pac
Minimum Solder Mask Sliver Constraint: (7.826mil < 10mil) Between Via (1123.778mil,-2406.5mil) from Top Layer to Bottom Layer And Via
Minimum Solder Mask Sliver Constraint: (7.543mil < 10mil) Between Via (1676.969mil,-2406.5mil) from Top Layer to Bottom Layer And Via
Minimum Solder Mask Sliver Constraint: (9.012mil < 10mil) Between Via (3264mil,-2883mil) from Top Layer to Bottom Layer And Via
Minimum Solder Mask Sliver Constraint: (6.319mil < 10mil) Between Via (3659mil,-3264mil) from Top Layer to Bottom Layer And Via
Minimum Solder Mask Sliver Constraint: (3.397mil < 10mil) Between Via (3724.213mil,-2414.5mil) from Top Layer to Bottom Layer And Via
Minimum Solder Mask Sliver Constraint: (8.439mil < 10mil) Between Via (3724.213mil,-2677.165mil) from Top Layer to Bottom Layer And Via
Minimum Solder Mask Sliver Constraint: (2.748mil < 10mil) Between Via (4289.764mil,-2414.5mil) from Top Layer to Bottom Layer And Via

Silk To Solder Mask (Clearance=10mil) (IsPad),(All)
Silk To Solder Mask Clearance Constraint: (Collision < 10mil) Between Pad C1-1(2373mil,-3236.142mil) on Top Layer And Text "D1'
Silk To Solder Mask Clearance Constraint: (7.874mil < 10mil) Between Pad C1-1(2373mil,-3236.142mil) on Top Layer And Track
Silk To Solder Mask Clearance Constraint: (7.874mil < 10mil) Between Pad C1-1(2373mil,-3236.142mil) on Top Layer And Track
Silk To Solder Mask Clearance Constraint: (Collision < 10mil) Between Pad C11-1(2547.581mil,-2598.425mil) on Top Layer And Text "R18'
Silk To Solder Mask Clearance Constraint: (Collision < 10mil) Between Pad C11-1(2547.581mil,-2598.425mil) on Top Layer And Text "R19'
Silk To Solder Mask Clearance Constraint: (Collision < 10mil) Between Pad C11-2(2494.432mil,-2598.425mil) on Top Layer And Text "R19'
Silk To Solder Mask Clearance Constraint: (Collision < 10mil) Between Pad C1-2(2373mil,-3003.858mil) on Top Layer And Text "LED2'
Silk To Solder Mask Clearance Constraint: (7.874mil < 10mil) Between Pad C1-2(2373mil,-3003.858mil) on Top Layer And Track
Silk To Solder Mask Clearance Constraint: (7.874mil < 10mil) Between Pad C1-2(2373mil,-3003.858mil) on Top Layer And Track
Silk To Solder Mask Clearance Constraint: (3.539mil < 10mil) Between Pad C12-1(5255.906mil,-1646.653mil) on Top Layer And Text "R7'
Silk To Solder Mask Clearance Constraint: (Collision < 10mil) Between Pad C12-2(5255.906mil,-1699.803mil) on Top Layer And Text "R7'
Silk To Solder Mask Clearance Constraint: (Collision < 10mil) Between Pad C13-1(5179.134mil,-1699.803mil) on Top Layer And Text "R7'
Silk To Solder Mask Clearance Constraint: (3.539mil < 10mil) Between Pad C13-2(5179.134mil,-1646.653mil) on Top Layer And Text "R7'
Silk To Solder Mask Clearance Constraint: (Collision < 10mil) Between Pad C14-1(5619.095mil,-1653.471mil) on Top Layer And Text "R11'
Silk To Solder Mask Clearance Constraint: (Collision < 10mil) Between Pad C14-2(5619.095mil,-1706.621mil) on Top Layer And Text "R11'
Silk To Solder Mask Clearance Constraint: (Collision < 10mil) Between Pad C15-2(2661.615mil,-1673.819mil) on Top Layer And Text "R20'
Silk To Solder Mask Clearance Constraint: (Collision < 10mil) Between Pad C16-1(5540.355mil,-1706.621mil) on Top Layer And Text "R11'
Silk To Solder Mask Clearance Constraint: (Collision < 10mil) Between Pad C16-2(5540.355mil,-1653.471mil) on Top Layer And Text "R11'
Silk To Solder Mask Clearance Constraint: (Collision < 10mil) Between Pad C17-1(2578.74mil,-1673.228mil) on Top Layer And Text "R20'
Silk To Solder Mask Clearance Constraint: (Collision < 10mil) Between Pad C18-2(7830.709mil,-1621.063mil) on Top Layer And Text "R24'
Silk To Solder Mask Clearance Constraint: (Collision < 10mil) Between Pad C19-1(3027.559mil,-1607.283mil) on Top Layer And Text "C21'
Silk To Solder Mask Clearance Constraint: (Collision < 10mil) Between Pad C19-2(3027.559mil,-1660.433mil) on Top Layer And Text "C21'
Silk To Solder Mask Clearance Constraint: (Collision < 10mil) Between Pad C19-2(3027.559mil,-1660.433mil) on Top Layer And Text "R26'
Silk To Solder Mask Clearance Constraint: (Collision < 10mil) Between Pad C20-1(7755.906mil,-1621.063mil) on Top Layer And Text "R24'
Silk To Solder Mask Clearance Constraint: (Collision < 10mil) Between Pad C21-1(2957.067mil,-1660.433mil) on Top Layer And Text "R26'
Silk To Solder Mask Clearance Constraint: (Collision < 10mil) Between Pad C26-2(6041.339mil,-1756.087mil) on Top Layer And Text "C26'
Silk To Solder Mask Clearance Constraint: (9.323mil < 10mil) Between Pad C29-1(1025.788mil,-2034.449mil) on Top Layer And Text "C47'
Silk To Solder Mask Clearance Constraint: (Collision < 10mil) Between Pad C29-1(1025.788mil,-2034.449mil) on Top Layer And Text "U17'
Silk To Solder Mask Clearance Constraint: (Collision < 10mil) Between Pad C29-2(1025.788mil,-1981.299mil) on Top Layer And Text "C47'
Silk To Solder Mask Clearance Constraint: (3.291mil < 10mil) Between Pad C29-2(1025.788mil,-1981.299mil) on Top Layer And Text "U17'
Silk To Solder Mask Clearance Constraint: (Collision < 10mil) Between Pad C31-1(1576.969mil,-2034.449mil) on Top Layer And Text "U18'
Silk To Solder Mask Clearance Constraint: (3.511mil < 10mil) Between Pad C31-2(1576.969mil,-1981.299mil) on Top Layer And Text "U18'
Silk To Solder Mask Clearance Constraint: (Collision < 10mil) Between Pad C33-1(6224.803mil,-2054.134mil) on Top Layer And Text "U21'
Silk To Solder Mask Clearance Constraint: (Collision < 10mil) Between Pad C33-2(6224.803mil,-2000.984mil) on Top Layer And Text "C55'
Silk To Solder Mask Clearance Constraint: (2.919mil < 10mil) Between Pad C33-2(6224.803mil,-2000.984mil) on Top Layer And Text "U21'
Silk To Solder Mask Clearance Constraint: (Collision < 10mil) Between Pad C35-1(6773.819mil,-2054.134mil) on Top Layer And Text "U22'
Silk To Solder Mask Clearance Constraint: (3.563mil < 10mil) Between Pad C35-2(6773.819mil,-2000.984mil) on Top Layer And Text "U22'
Silk To Solder Mask Clearance Constraint: (Collision < 10mil) Between Pad C37-1(4192.914mil,-2034.449mil) on Top Layer And Text "U20'
Silk To Solder Mask Clearance Constraint: (4.775mil < 10mil) Between Pad C37-2(4192.914mil,-1981.299mil) on Top Layer And Text "U20'
Silk To Solder Mask Clearance Constraint: (Collision < 10mil) Between Pad C39-1(5616.701mil,-3817.071mil) on Top Layer And Text "C44'
Silk To Solder Mask Clearance Constraint: (Collision < 10mil) Between Pad C40-1(5616.701mil,-3738.331mil) on Top Layer And Text "C39'
Silk To Solder Mask Clearance Constraint: (Collision < 10mil) Between Pad C40-2(5563.551mil,-3738.331mil) on Top Layer And Text "C39'
Silk To Solder Mask Clearance Constraint: (Collision < 10mil) Between Pad C41-1(5617.15mil,-3652mil) on Top Layer And Text "C40'
Silk To Solder Mask Clearance Constraint: (Collision < 10mil) Between Pad C41-2(5564mil,-3652mil) on Top Layer And Text "C40'
Silk To Solder Mask Clearance Constraint: (Collision < 10mil) Between Pad C4-2(3130mil,-3207.425mil) on Top Layer And Text "TP6'
Silk To Solder Mask Clearance Constraint: (Collision < 10mil) Between Pad C46-1(2182.949mil,-2532.48mil) on Top Layer And Text "TP23'
Silk To Solder Mask Clearance Constraint: (Collision < 10mil) Between Pad C47-1(929.331mil,-2113.19mil) on Top Layer And Text "U24'
Silk To Solder Mask Clearance Constraint: (4.676mil < 10mil) Between Pad C47-2(929.331mil,-2060.041mil) on Top Layer And Text "U24'
Silk To Solder Mask Clearance Constraint: (Collision < 10mil) Between Pad C48-1(929.331mil,-2532.48mil) on Top Layer And Text "R32'
Silk To Solder Mask Clearance Constraint: (8.764mil < 10mil) Between Pad C48-1(929.331mil,-2532.48mil) on Top Layer And Text "R33'
Silk To Solder Mask Clearance Constraint: (6.429mil < 10mil) Between Pad C48-1(929.331mil,-2532.48mil) on Top Layer And Text "TH_TP2'
Silk To Solder Mask Clearance Constraint: (Collision < 10mil) Between Pad C48-2(929.331mil,-2585.63mil) on Top Layer And Text "R32'

Silk To Solder Mask (Clearance=10mil) (IsPad),(All)
Silk To Solder Mask Clearance Constraint: (6.988mil < 10mil) Between Pad C48-2(929.331mil,-2585.63mil) on Top Layer And Text "TH_TP2'
Silk To Solder Mask Clearance Constraint: (Collision < 10mil) Between Pad C5-1(3230.512mil,-3262.716mil) on Top Layer And Text "U2'
Silk To Solder Mask Clearance Constraint: (Collision < 10mil) Between Pad C51-1(3480.512mil,-2132.962mil) on Top Layer And Text "U26'
Silk To Solder Mask Clearance Constraint: (9.813mil < 10mil) Between Pad C51-2(3480.512mil,-2079.812mil) on Top Layer And Text "U26'
Silk To Solder Mask Clearance Constraint: (Collision < 10mil) Between Pad C5-2(3230.512mil,-3209.567mil) on Top Layer And Text "U2'
Silk To Solder Mask Clearance Constraint: (1.564mil < 10mil) Between Pad C52-1(3480.512mil,-2512.795mil) on Top Layer And Text "TP24'
Silk To Solder Mask Clearance Constraint: (Collision < 10mil) Between Pad C55-1(6064.567mil,-2125.984mil) on Top Layer And Text "U28'
Silk To Solder Mask Clearance Constraint: (Collision < 10mil) Between Pad C55-2(6064.567mil,-2072.835mil) on Top Layer And Text "U28'
Silk To Solder Mask Clearance Constraint: (Collision < 10mil) Between Pad C60-1(3622.048mil,-2034.449mil) on Top Layer And Text "U19'
Silk To Solder Mask Clearance Constraint: (1.898mil < 10mil) Between Pad C60-2(3622.048mil,-1981.299mil) on Top Layer And Text "U19'
Silk To Solder Mask Clearance Constraint: (Collision < 10mil) Between Pad C6-1(3480.512mil,-3622.046mil) on Top Layer And Text "TH_TP1'
Silk To Solder Mask Clearance Constraint: (8.318mil < 10mil) Between Pad C6-2(3480.512mil,-3675.196mil) on Top Layer And Text "TH_TP1'
Silk To Solder Mask Clearance Constraint: (1.598mil < 10mil) Between Pad C7-2(157.48mil,-2447.835mil) on Top Layer And Text "TP4'
Silk To Solder Mask Clearance Constraint: (Collision < 10mil) Between Pad C8-1(3154.669mil,-2746.425mil) on Top Layer And Text "U3'
Silk To Solder Mask Clearance Constraint: (Collision < 10mil) Between Pad C8-2(3154.669mil,-2799.575mil) on Top Layer And Text "U3'
Silk To Solder Mask Clearance Constraint: (6.535mil < 10mil) Between Pad D1-1(2381.89mil,-3618.417mil) on Top Layer And Track
Silk To Solder Mask Clearance Constraint: (6.535mil < 10mil) Between Pad D1-1(2381.89mil,-3618.417mil) on Top Layer And Track
Silk To Solder Mask Clearance Constraint: (6.535mil < 10mil) Between Pad D1-2(2381.89mil,-3460.937mil) on Top Layer And Track
Silk To Solder Mask Clearance Constraint: (6.535mil < 10mil) Between Pad D1-2(2381.89mil,-3460.937mil) on Top Layer And Track
Silk To Solder Mask Clearance Constraint: (9.724mil < 10mil) Between Pad D2-2(3001.126mil,-3605.407mil) on Top Layer And Track
Silk To Solder Mask Clearance Constraint: (0.236mil < 10mil) Between Pad K1-3(1333.032mil,-3690.945mil) on Multi-Layer And Track
Silk To Solder Mask Clearance Constraint: (0.236mil < 10mil) Between Pad K1-4(1333.032mil,-3080.709mil) on Multi-Layer And Track
Silk To Solder Mask Clearance Constraint: (Collision < 10mil) Between Pad LED1-1(2580.709mil,-3622.046mil) on Top Layer And Text "TP2'
Silk To Solder Mask Clearance Constraint: (Collision < 10mil) Between Pad LED1-2(2521.654mil,-3622.046mil) on Top Layer And Text "TP2'
Silk To Solder Mask Clearance Constraint: (8.213mil < 10mil) Between Pad LED1-2(2521.654mil,-3622.046mil) on Top Layer And Track
Silk To Solder Mask Clearance Constraint: (8.213mil < 10mil) Between Pad LED2-2(2207.303mil,-2736.22mil) on Top Layer And Track
Silk To Solder Mask Clearance Constraint: (8.213mil < 10mil) Between Pad LED3-2(5452.756mil,-3346.457mil) on Top Layer And Track
Silk To Solder Mask Clearance Constraint: (Collision < 10mil) Between Pad P1-(4094.488mil,-2940.945mil) on Top Layer And Track
Silk To Solder Mask Clearance Constraint: (Collision < 10mil) Between Pad P1-(4094.488mil,-3555.118mil) on Top Layer And Track
Silk To Solder Mask Clearance Constraint: (9.281mil < 10mil) Between Pad P10-0(1578.74mil,-1142.52mil) on Multi-Layer And Track
Silk To Solder Mask Clearance Constraint: (7.053mil < 10mil) Between Pad P10-0(1578.74mil,-1142.52mil) on Multi-Layer And Track
Silk To Solder Mask Clearance Constraint: (9.281mil < 10mil) Between Pad P10-0(2287.402mil,-1142.52mil) on Multi-Layer And Track
Silk To Solder Mask Clearance Constraint: (8.4mil < 10mil) Between Pad P10-0(2287.402mil,-1142.52mil) on Multi-Layer And Track
Silk To Solder Mask Clearance Constraint: (8.78mil < 10mil) Between Pad P1-1(4165.355mil,-3011.812mil) on Top Layer And Track
Silk To Solder Mask Clearance Constraint: (9.281mil < 10mil) Between Pad P11-0(3255.906mil,-1142.52mil) on Multi-Layer And Track
Silk To Solder Mask Clearance Constraint: (7.053mil < 10mil) Between Pad P11-0(3255.906mil,-1142.52mil) on Multi-Layer And Track
Silk To Solder Mask Clearance Constraint: (9.281mil < 10mil) Between Pad P11-0(3964.567mil,-1142.52mil) on Multi-Layer And Track
Silk To Solder Mask Clearance Constraint: (8.4mil < 10mil) Between Pad P11-0(3964.567mil,-1142.52mil) on Multi-Layer And Track
Silk To Solder Mask Clearance Constraint: (9.281mil < 10mil) Between Pad P12-0(4177.166mil,-1142.52mil) on Multi-Layer And Track
Silk To Solder Mask Clearance Constraint: (7.053mil < 10mil) Between Pad P12-0(4177.166mil,-1142.52mil) on Multi-Layer And Track
Silk To Solder Mask Clearance Constraint: (9.281mil < 10mil) Between Pad P12-0(4885.827mil,-1142.52mil) on Multi-Layer And Track
Silk To Solder Mask Clearance Constraint: (8.4mil < 10mil) Between Pad P12-0(4885.827mil,-1142.52mil) on Multi-Layer And Track
Silk To Solder Mask Clearance Constraint: (8.767mil < 10mil) Between Pad P1-25(4165.355mil,-3484.252mil) on Top Layer And Track
Silk To Solder Mask Clearance Constraint: (9.4mil < 10mil) Between Pad P1-26(4023.622mil,-3484.252mil) on Top Layer And Track
Silk To Solder Mask Clearance Constraint: (9.268mil < 10mil) Between Pad P1-26(4023.622mil,-3484.252mil) on Top Layer And Track
Silk To Solder Mask Clearance Constraint: (9.268mil < 10mil) Between Pad P1-27(4023.622mil,-3464.567mil) on Top Layer And Track
Silk To Solder Mask Clearance Constraint: (9.268mil < 10mil) Between Pad P1-28(4023.622mil,-3444.882mil) on Top Layer And Track
Silk To Solder Mask Clearance Constraint: (9.268mil < 10mil) Between Pad P1-29(4023.622mil,-3425.197mil) on Top Layer And Track
Silk To Solder Mask Clearance Constraint: (9.268mil < 10mil) Between Pad P1-30(4023.622mil,-3405.512mil) on Top Layer And Track
Silk To Solder Mask Clearance Constraint: (9.281mil < 10mil) Between Pad P13-0(5857.284mil,-1142.52mil) on Multi-Layer And Track
Silk To Solder Mask Clearance Constraint: (7.053mil < 10mil) Between Pad P13-0(5857.284mil,-1142.52mil) on Multi-Layer And Track
Silk To Solder Mask Clearance Constraint: (9.281mil < 10mil) Between Pad P13-0(6565.945mil,-1142.52mil) on Multi-Layer And Track

Silk To Solder Mask (Clearance=10mil) (IsPad),(All)
Silk To Solder Mask Clearance Constraint: (8.4mil < 10mil) Between Pad P13-0(6565.945mil,-1142.52mil) on Multi-Layer And Track
Silk To Solder Mask Clearance Constraint: (9.268mil < 10mil) Between Pad P1-31(4023.622mil,-3385.827mil) on Top Layer And Track
Silk To Solder Mask Clearance Constraint: (9.268mil < 10mil) Between Pad P1-32(4023.622mil,-3366.142mil) on Top Layer And Track
Silk To Solder Mask Clearance Constraint: (9.268mil < 10mil) Between Pad P1-33(4023.622mil,-3346.457mil) on Top Layer And Track
Silk To Solder Mask Clearance Constraint: (9.268mil < 10mil) Between Pad P1-34(4023.622mil,-3326.772mil) on Top Layer And Track
Silk To Solder Mask Clearance Constraint: (9.268mil < 10mil) Between Pad P1-35(4023.622mil,-3307.087mil) on Top Layer And Track
Silk To Solder Mask Clearance Constraint: (9.268mil < 10mil) Between Pad P1-36(4023.622mil,-3287.402mil) on Top Layer And Track
Silk To Solder Mask Clearance Constraint: (9.268mil < 10mil) Between Pad P1-37(4023.622mil,-3267.717mil) on Top Layer And Track
Silk To Solder Mask Clearance Constraint: (9.268mil < 10mil) Between Pad P1-38(4023.622mil,-3248.032mil) on Top Layer And Track
Silk To Solder Mask Clearance Constraint: (9.268mil < 10mil) Between Pad P1-39(4023.622mil,-3228.347mil) on Top Layer And Track
Silk To Solder Mask Clearance Constraint: (9.268mil < 10mil) Between Pad P1-40(4023.622mil,-3208.662mil) on Top Layer And Track
Silk To Solder Mask Clearance Constraint: (9.281mil < 10mil) Between Pad P14-0(6775.591mil,-1142.52mil) on Multi-Layer And Track
Silk To Solder Mask Clearance Constraint: (7.053mil < 10mil) Between Pad P14-0(6775.591mil,-1142.52mil) on Multi-Layer And Track
Silk To Solder Mask Clearance Constraint: (9.281mil < 10mil) Between Pad P14-0(7484.252mil,-1142.52mil) on Multi-Layer And Track
Silk To Solder Mask Clearance Constraint: (8.4mil < 10mil) Between Pad P14-0(7484.252mil,-1142.52mil) on Multi-Layer And Track
Silk To Solder Mask Clearance Constraint: (9.268mil < 10mil) Between Pad P1-41(4023.622mil,-3188.977mil) on Top Layer And Track
Silk To Solder Mask Clearance Constraint: (9.268mil < 10mil) Between Pad P1-42(4023.622mil,-3169.292mil) on Top Layer And Track
Silk To Solder Mask Clearance Constraint: (9.268mil < 10mil) Between Pad P1-43(4023.622mil,-3149.607mil) on Top Layer And Track
Silk To Solder Mask Clearance Constraint: (9.268mil < 10mil) Between Pad P1-44(4023.622mil,-3129.922mil) on Top Layer And Track
Silk To Solder Mask Clearance Constraint: (9.268mil < 10mil) Between Pad P1-45(4023.622mil,-3110.237mil) on Top Layer And Track
Silk To Solder Mask Clearance Constraint: (9.268mil < 10mil) Between Pad P1-46(4023.622mil,-3090.552mil) on Top Layer And Track
Silk To Solder Mask Clearance Constraint: (9.268mil < 10mil) Between Pad P1-47(4023.622mil,-3070.867mil) on Top Layer And Track
Silk To Solder Mask Clearance Constraint: (9.268mil < 10mil) Between Pad P1-48(4023.622mil,-3051.182mil) on Top Layer And Track
Silk To Solder Mask Clearance Constraint: (9.268mil < 10mil) Between Pad P1-49(4023.622mil,-3031.497mil) on Top Layer And Track
Silk To Solder Mask Clearance Constraint: (9.401mil < 10mil) Between Pad P1-50(4023.622mil,-3011.812mil) on Top Layer And Track
Silk To Solder Mask Clearance Constraint: (9.268mil < 10mil) Between Pad P1-50(4023.622mil,-3011.812mil) on Top Layer And Track
Silk To Solder Mask Clearance Constraint: (9.918mil < 10mil) Between Pad P15-0(6021.26mil,-3208.661mil) on Multi-Layer And Track
Silk To Solder Mask Clearance Constraint: (9.281mil < 10mil) Between Pad P15-0(6021.26mil,-3208.661mil) on Multi-Layer And Track
Silk To Solder Mask Clearance Constraint: (9.281mil < 10mil) Between Pad P3-0(1782.89mil,-3463.299mil) on Multi-Layer And Track
Silk To Solder Mask Clearance Constraint: (7.053mil < 10mil) Between Pad P3-0(1782.89mil,-3463.299mil) on Multi-Layer And Track
Silk To Solder Mask Clearance Constraint: (9.281mil < 10mil) Between Pad P3-0(2019.11mil,-3463.299mil) on Multi-Layer And Track
Silk To Solder Mask Clearance Constraint: (8.4mil < 10mil) Between Pad P3-0(2019.11mil,-3463.299mil) on Multi-Layer And Track
Silk To Solder Mask Clearance Constraint: (8.4mil < 10mil) Between Pad P9-0(1366.142mil,-1142.52mil) on Multi-Layer And Track
Silk To Solder Mask Clearance Constraint: (9.281mil < 10mil) Between Pad P9-0(1366.142mil,-1142.52mil) on Multi-Layer And Track
Silk To Solder Mask Clearance Constraint: (9.281mil < 10mil) Between Pad P9-0(657.481mil,-1142.52mil) on Multi-Layer And Track
Silk To Solder Mask Clearance Constraint: (7.053mil < 10mil) Between Pad P9-0(657.481mil,-1142.52mil) on Multi-Layer And Track
Silk To Solder Mask Clearance Constraint: (1.969mil < 10mil) Between Pad Q1-1(2837.74mil,-3633.181mil) on Top Layer And Track
Silk To Solder Mask Clearance Constraint: (4.415mil < 10mil) Between Pad Q1-2(2837.74mil,-3607.591mil) on Top Layer And Track
Silk To Solder Mask Clearance Constraint: (4.415mil < 10mil) Between Pad Q1-2(2837.74mil,-3607.591mil) on Top Layer And Track
Silk To Solder Mask Clearance Constraint: (1.969mil < 10mil) Between Pad Q1-3(2837.74mil,-3582mil) on Top Layer And Track
Silk To Solder Mask Clearance Constraint: (1.969mil < 10mil) Between Pad Q1-4(2764.905mil,-3582mil) on Top Layer And Track
Silk To Solder Mask Clearance Constraint: (Collision < 10mil) Between Pad Q1-4(2764.905mil,-3582mil) on Top Layer And Track
Silk To Solder Mask Clearance Constraint: (4.415mil < 10mil) Between Pad Q1-5(2764.905mil,-3607.591mil) on Top Layer And Track
Silk To Solder Mask Clearance Constraint: (4.415mil < 10mil) Between Pad Q1-5(2764.905mil,-3607.591mil) on Top Layer And Track
Silk To Solder Mask Clearance Constraint: (Collision < 10mil) Between Pad Q1-5(2764.905mil,-3607.591mil) on Top Layer And Track
Silk To Solder Mask Clearance Constraint: (1.969mil < 10mil) Between Pad Q1-6(2764.905mil,-3633.181mil) on Top Layer And Track
Silk To Solder Mask Clearance Constraint: (Collision < 10mil) Between Pad Q1-6(2764.905mil,-3633.181mil) on Top Layer And Track
Silk To Solder Mask Clearance Constraint: (Collision < 10mil) Between Pad Q1-7(2801.322mil,-3619.402mil) on Top Layer And Track
Silk To Solder Mask Clearance Constraint: (Collision < 10mil) Between Pad Q1-8(2801.322mil,-3578.457mil) on Top Layer And Track
Silk To Solder Mask Clearance Constraint: (Collision < 10mil) Between Pad R10-2(2587.599mil,-1092.205mil) on Top Layer And Text "R21'
Silk To Solder Mask Clearance Constraint: (Collision < 10mil) Between Pad R11-2(5610.423mil,-1791.339mil) on Top Layer And Text "TP12'
Silk To Solder Mask Clearance Constraint: (Collision < 10mil) Between Pad R12-2(402.166mil,-998.976mil) on Top Layer And Text "R14'

Silk To Solder Mask (Clearance=10mil) (IsPad),(All)
Silk To Solder Mask Clearance Constraint: (Collision < 10mil) Between Pad R14-1(402.166mil,-1126.732mil) on Top Layer And Text "TP10'
Silk To Solder Mask Clearance Constraint: (Collision < 10mil) Between Pad R14-2(463.189mil,-1126.732mil) on Top Layer And Text "TP10'
Silk To Solder Mask Clearance Constraint: (Collision < 10mil) Between Pad R16-1(3382.284mil,-2736.22mil) on Top Layer And Text "R17'
Silk To Solder Mask Clearance Constraint: (Collision < 10mil) Between Pad R16-2(3321.26mil,-2736.22mil) on Top Layer And Text "R17'
Silk To Solder Mask Clearance Constraint: (Collision < 10mil) Between Pad R17-1(3382.284mil,-2677.165mil) on Top Layer And Text "R16'
Silk To Solder Mask Clearance Constraint: (Collision < 10mil) Between Pad R17-2(3321.26mil,-2677.165mil) on Top Layer And Text "R16'
Silk To Solder Mask Clearance Constraint: (7.911mil < 10mil) Between Pad R19-2(2410.433mil,-2736.22mil) on Top Layer And Text "LED2'
Silk To Solder Mask Clearance Constraint: (Collision < 10mil) Between Pad R22-2(7755.906mil,-1113.189mil) on Top Layer And Text "R25'
Silk To Solder Mask Clearance Constraint: (Collision < 10mil) Between Pad R23-2(2957.067mil,-1043.307mil) on Top Layer And Text "R27'
Silk To Solder Mask Clearance Constraint: (Collision < 10mil) Between Pad R24-1(7825.788mil,-1751.968mil) on Top Layer And Text "C18'
Silk To Solder Mask Clearance Constraint: (Collision < 10mil) Between Pad R24-1(7825.788mil,-1751.968mil) on Top Layer And Text "TP16'
Silk To Solder Mask Clearance Constraint: (Collision < 10mil) Between Pad R24-2(7764.764mil,-1751.968mil) on Top Layer And Text "C18'
Silk To Solder Mask Clearance Constraint: (Collision < 10mil) Between Pad R24-2(7764.764mil,-1751.968mil) on Top Layer And Text "TP16'
Silk To Solder Mask Clearance Constraint: (Collision < 10mil) Between Pad R25-1(7753.937mil,-1240.158mil) on Top Layer And Text "U9'
Silk To Solder Mask Clearance Constraint: (Collision < 10mil) Between Pad R25-2(7814.961mil,-1240.158mil) on Top Layer And Text "U9'
Silk To Solder Mask Clearance Constraint: (Collision < 10mil) Between Pad R27-1(2957.067mil,-1181.102mil) on Top Layer And Text "TP17'
Silk To Solder Mask Clearance Constraint: (1.448mil < 10mil) Between Pad R27-2(3018.091mil,-1181.102mil) on Top Layer And Text "TP17'
Silk To Solder Mask Clearance Constraint: (Collision < 10mil) Between Pad R28-1(2066.929mil,-2075.787mil) on Top Layer And Text "U23'
Silk To Solder Mask Clearance Constraint: (Collision < 10mil) Between Pad R28-2(2066.929mil,-2136.811mil) on Top Layer And Text "U23'
Silk To Solder Mask Clearance Constraint: (Collision < 10mil) Between Pad R29-1(2139.724mil,-2075.787mil) on Top Layer And Text "U23'
Silk To Solder Mask Clearance Constraint: (Collision < 10mil) Between Pad R29-2(2139.724mil,-2136.811mil) on Top Layer And Text "U23'
Silk To Solder Mask Clearance Constraint: (5.603mil < 10mil) Between Pad R3-1(2770.811mil,-3437.888mil) on Top Layer And Text "Q1'
Silk To Solder Mask Clearance Constraint: (Collision < 10mil) Between Pad R3-1(2770.811mil,-3437.888mil) on Top Layer And Track
Silk To Solder Mask Clearance Constraint: (5.603mil < 10mil) Between Pad R3-2(2831.834mil,-3437.888mil) on Top Layer And Text "Q1'
Silk To Solder Mask Clearance Constraint: (Collision < 10mil) Between Pad R33-1(859.843mil,-2559.055mil) on Top Layer And Text "R32'
Silk To Solder Mask Clearance Constraint: (Collision < 10mil) Between Pad R33-1(859.843mil,-2559.055mil) on Top Layer And Text "TH_TP2'
Silk To Solder Mask Clearance Constraint: (Collision < 10mil) Between Pad R33-2(798.819mil,-2559.055mil) on Top Layer And Text "R32'
Silk To Solder Mask Clearance Constraint: (Collision < 10mil) Between Pad R33-2(798.819mil,-2559.055mil) on Top Layer And Text "TH_TP2'
Silk To Solder Mask Clearance Constraint: (Collision < 10mil) Between Pad R34-1(4704.725mil,-2066.929mil) on Top Layer And Text "U25'
Silk To Solder Mask Clearance Constraint: (Collision < 10mil) Between Pad R34-2(4704.725mil,-2127.953mil) on Top Layer And Text "U25'
Silk To Solder Mask Clearance Constraint: (Collision < 10mil) Between Pad R35-1(4783.465mil,-2066.929mil) on Top Layer And Text "U25'
Silk To Solder Mask Clearance Constraint: (Collision < 10mil) Between Pad R35-2(4783.465mil,-2127.953mil) on Top Layer And Text "U25'
Silk To Solder Mask Clearance Constraint: (Collision < 10mil) Between Pad R36-2(3330.512mil,-2066.043mil) on Top Layer And Text "U26'
Silk To Solder Mask Clearance Constraint: (Collision < 10mil) Between Pad R37-2(3405.512mil,-2066.043mil) on Top Layer And Text "U26'
Silk To Solder Mask Clearance Constraint: (8.224mil < 10mil) Between Pad R38-1(7381.89mil,-2056.102mil) on Top Layer And Text "U27'
Silk To Solder Mask Clearance Constraint: (Collision < 10mil) Between Pad R38-2(7381.89mil,-2117.126mil) on Top Layer And Text "U27'
Silk To Solder Mask Clearance Constraint: (8.224mil < 10mil) Between Pad R39-1(7452.756mil,-2056.102mil) on Top Layer And Text "U27'
Silk To Solder Mask Clearance Constraint: (Collision < 10mil) Between Pad R39-2(7452.756mil,-2117.126mil) on Top Layer And Text "U27'
Silk To Solder Mask Clearance Constraint: (Collision < 10mil) Between Pad R4-1(2770.811mil,-3337.599mil) on Top Layer And Text "R3'
Silk To Solder Mask Clearance Constraint: (Collision < 10mil) Between Pad R4-1(2770.811mil,-3337.599mil) on Top Layer And Track
Silk To Solder Mask Clearance Constraint: (Collision < 10mil) Between Pad R4-2(2831.834mil,-3337.599mil) on Top Layer And Text "R3'
Silk To Solder Mask Clearance Constraint: (Collision < 10mil) Between Pad R44-1(6170.276mil,-3444.882mil) on Top Layer And Text "R43'
Silk To Solder Mask Clearance Constraint: (Collision < 10mil) Between Pad R44-2(6231.299mil,-3444.882mil) on Top Layer And Text "R43'
Silk To Solder Mask Clearance Constraint: (Collision < 10mil) Between Pad R45-1(6170.276mil,-3326.772mil) on Top Layer And Text "R44'
Silk To Solder Mask Clearance Constraint: (Collision < 10mil) Between Pad R45-2(6231.299mil,-3326.772mil) on Top Layer And Text "R44'
Silk To Solder Mask Clearance Constraint: (Collision < 10mil) Between Pad R46-1(5719.488mil,-3326.772mil) on Top Layer And Text "R47'
Silk To Solder Mask Clearance Constraint: (Collision < 10mil) Between Pad R46-2(5658.465mil,-3326.772mil) on Top Layer And Text "R47'
Silk To Solder Mask Clearance Constraint: (Collision < 10mil) Between Pad R47-1(5719.488mil,-3444.882mil) on Top Layer And Text "R48'
Silk To Solder Mask Clearance Constraint: (Collision < 10mil) Between Pad R47-2(5658.465mil,-3444.882mil) on Top Layer And Text "R48'
Silk To Solder Mask Clearance Constraint: (Collision < 10mil) Between Pad R48-2(5658.465mil,-3562.992mil) on Top Layer And Text "C41'
Silk To Solder Mask Clearance Constraint: (Collision < 10mil) Between Pad R5-2(5452.756mil,-3199.803mil) on Top Layer And Text "LED3'
Silk To Solder Mask Clearance Constraint: (Collision < 10mil) Between Pad R6-2(5175.197mil,-1054.134mil) on Top Layer And Text "R8'

Silk To Solder Mask (Clearance=10mil) (IsPad),(All)
Silk To Solder Mask Clearance Constraint: (Collision < 10mil) Between Pad R7-1(5240.158mil,-1791.339mil) on Top Layer And Text "TP8'
Silk To Solder Mask Clearance Constraint: (Collision < 10mil) Between Pad R7-2(5179.134mil,-1791.339mil) on Top Layer And Text "TP8'
Silk To Solder Mask Clearance Constraint: (Collision < 10mil) Between Pad R9-2(5540.355mil,-1054.134mil) on Top Layer And Text "R15'
Silk To Solder Mask Clearance Constraint: (Collision < 10mil) Between Pad R9-2(5540.355mil,-1054.134mil) on Top Layer And Text "TP9'
Silk To Solder Mask Clearance Constraint: (Collision < 10mil) Between Pad TP10-TP(400.196mil,-1224.37mil) on Top Layer And Text "U5'
Silk To Solder Mask Clearance Constraint: (8.278mil < 10mil) Between Pad TP11-TP(400.196mil,-1814.921mil) on Top Layer And Text "C58'
Silk To Solder Mask Clearance Constraint: (Collision < 10mil) Between Pad TP16-TP(7677.166mil,-1811.024mil) on Top Layer And Text "P2'
Silk To Solder Mask Clearance Constraint: (Collision < 10mil) Between Pad TP17-TP(2854.331mil,-1181.102mil) on Top Layer And Text "TP17'
Silk To Solder Mask Clearance Constraint: (4.652mil < 10mil) Between Pad TP21-TP(964.567mil,-1515.748mil) on Top Layer And Text "C24'
Silk To Solder Mask Clearance Constraint: (Collision < 10mil) Between Pad TP21-TP(964.567mil,-1515.748mil) on Top Layer And Text "TP22'
Silk To Solder Mask Clearance Constraint: (Collision < 10mil) Between Pad TP22-TP(964.567mil,-1594.488mil) on Top Layer And Text "C24'
Silk To Solder Mask Clearance Constraint: (Collision < 10mil) Between Pad TP27-TP(3543.307mil,-1535.433mil) on Top Layer And Text "TP28'
Silk To Solder Mask Clearance Constraint: (Collision < 10mil) Between Pad TP28-TP(3543.307mil,-1620.669mil) on Top Layer And Text "C23'
Silk To Solder Mask Clearance Constraint: (Collision < 10mil) Between Pad TP31-TP(6122.047mil,-1557.087mil) on Top Layer And Text "TP32'
Silk To Solder Mask Clearance Constraint: (Collision < 10mil) Between Pad U10-5(3027.559mil,-1471.457mil) on Top Layer And Text "C19'
Silk To Solder Mask Clearance Constraint: (Collision < 10mil) Between Pad U11-1(2429.134mil,-1673.228mil) on Top Layer And Text "TP20'
Silk To Solder Mask Clearance Constraint: (Collision < 10mil) Between Pad U11-10(2255.906mil,-1673.228mil) on Top Layer And Text "TP19'
Silk To Solder Mask Clearance Constraint: (Collision < 10mil) Between Pad U11-10(2255.906mil,-1673.228mil) on Top Layer And Text "TP20'
Silk To Solder Mask Clearance Constraint: (Collision < 10mil) Between Pad U11-2(2429.134mil,-1653.543mil) on Top Layer And Text "TP20'
Silk To Solder Mask Clearance Constraint: (1.223mil < 10mil) Between Pad U11-9(2255.906mil,-1653.543mil) on Top Layer And Text "TP19'
Silk To Solder Mask Clearance Constraint: (Collision < 10mil) Between Pad U11-9(2255.906mil,-1653.543mil) on Top Layer And Text "TP20'
Silk To Solder Mask Clearance Constraint: (9.734mil < 10mil) Between Pad U1-2(455.473mil,-2341.142mil) on Top Layer And Track
Silk To Solder Mask Clearance Constraint: (8.92mil < 10mil) Between Pad U1-2(455.473mil,-2341.142mil) on Top Layer And Track
Silk To Solder Mask Clearance Constraint: (9.691mil < 10mil) Between Pad U1-3(455.473mil,-2291.142mil) on Top Layer And Track
Silk To Solder Mask Clearance Constraint: (8.973mil < 10mil) Between Pad U1-3(455.473mil,-2291.142mil) on Top Layer And Track
Silk To Solder Mask Clearance Constraint: (Collision < 10mil) Between Pad U13-1(581.827mil,-1574.803mil) on Top Layer And Text "C57'
Silk To Solder Mask Clearance Constraint: (Collision < 10mil) Between Pad U13-2(581.827mil,-1594.488mil) on Top Layer And Text "C57'
Silk To Solder Mask Clearance Constraint: (Collision < 10mil) Between Pad U13-3(581.827mil,-1614.173mil) on Top Layer And Text "C57'
Silk To Solder Mask Clearance Constraint: (Collision < 10mil) Between Pad U13-4(581.827mil,-1633.858mil) on Top Layer And Text "C57'
Silk To Solder Mask Clearance Constraint: (6.66mil < 10mil) Between Pad U13-5(581.827mil,-1653.543mil) on Top Layer And Text "C57'
Silk To Solder Mask Clearance Constraint: (5.989mil < 10mil) Between Pad U15-1(5759.843mil,-1614.173mil) on Top Layer And Text "C14'
Silk To Solder Mask Clearance Constraint: (Collision < 10mil) Between Pad U1-6(266.496mil,-2291.142mil) on Top Layer And Text "C7'
Silk To Solder Mask Clearance Constraint: (Collision < 10mil) Between Pad U16-1(5047.244mil,-1692.913mil) on Top Layer And Text "TP26'
Silk To Solder Mask Clearance Constraint: (Collision < 10mil) Between Pad U16-10(4874.016mil,-1692.913mil) on Top Layer And Text "TP25'
Silk To Solder Mask Clearance Constraint: (Collision < 10mil) Between Pad U16-10(4874.016mil,-1692.913mil) on Top Layer And Text "TP26'
Silk To Solder Mask Clearance Constraint: (6.618mil < 10mil) Between Pad U16-2(5047.244mil,-1673.228mil) on Top Layer And Text "TP26'
Silk To Solder Mask Clearance Constraint: (6.618mil < 10mil) Between Pad U16-9(4874.016mil,-1673.228mil) on Top Layer And Text "TP25'
Silk To Solder Mask Clearance Constraint: (6.618mil < 10mil) Between Pad U16-9(4874.016mil,-1673.228mil) on Top Layer And Text "TP26'
Silk To Solder Mask Clearance Constraint: (Collision < 10mil) Between Pad U17-1(1025.788mil,-2509.843mil) on Top Layer And Text "C28'
Silk To Solder Mask Clearance Constraint: (9.529mil < 10mil) Between Pad U17-1(1025.788mil,-2509.843mil) on Top Layer And Text "C48'
Silk To Solder Mask Clearance Constraint: (Collision < 10mil) Between Pad U17-2(1075.788mil,-2509.843mil) on Top Layer And Text "C28'
Silk To Solder Mask Clearance Constraint: (1.691mil < 10mil) Between Pad U17-2(1075.788mil,-2509.843mil) on Top Layer And Text "C48'
Silk To Solder Mask Clearance Constraint: (4.046mil < 10mil) Between Pad U17-3(1125.788mil,-2509.843mil) on Top Layer And Text "C28'
Silk To Solder Mask Clearance Constraint: (Collision < 10mil) Between Pad U17-4(1175.788mil,-2509.843mil) on Top Layer And Text "C28'
Silk To Solder Mask Clearance Constraint: (Collision < 10mil) Between Pad U18-1(1576.969mil,-2509.843mil) on Top Layer And Text "C30'
Silk To Solder Mask Clearance Constraint: (Collision < 10mil) Between Pad U18-2(1626.969mil,-2509.843mil) on Top Layer And Text "C30'
Silk To Solder Mask Clearance Constraint: (2.52mil < 10mil) Between Pad U18-3(1676.969mil,-2509.843mil) on Top Layer And Text "C30'
Silk To Solder Mask Clearance Constraint: (0.653mil < 10mil) Between Pad U18-4(1726.969mil,-2509.843mil) on Top Layer And Text "C30'
Silk To Solder Mask Clearance Constraint: (Collision < 10mil) Between Pad U19-1(3624.213mil,-2509.843mil) on Top Layer And Text "TP24'
Silk To Solder Mask Clearance Constraint: (Collision < 10mil) Between Pad U20-1(4189.764mil,-2509.843mil) on Top Layer And Text "C36'
Silk To Solder Mask Clearance Constraint: (Collision < 10mil) Between Pad U20-2(4239.764mil,-2509.843mil) on Top Layer And Text "C36'
Silk To Solder Mask Clearance Constraint: (2.122mil < 10mil) Between Pad U20-3(4289.764mil,-2509.843mil) on Top Layer And Text "C36'

Silk To Solder Mask (Clearance=10mil) (IsPad),(All)
Silk To Solder Mask Clearance Constraint: (Collision < 10mil) Between Pad U20-4(4339.764mil,-2509.843mil) on Top Layer And Text "C36'
Silk To Solder Mask Clearance Constraint: (3.792mil < 10mil) Between Pad U2-1(3230.512mil,-3552.165mil) on Top Layer And Text "TH_TP1'
Silk To Solder Mask Clearance Constraint: (Collision < 10mil) Between Pad U21-1(6224.803mil,-2529.528mil) on Top Layer And Text "C32'
Silk To Solder Mask Clearance Constraint: (Collision < 10mil) Between Pad U21-2(6274.803mil,-2529.528mil) on Top Layer And Text "C32'
Silk To Solder Mask Clearance Constraint: (2.563mil < 10mil) Between Pad U21-3(6324.803mil,-2529.528mil) on Top Layer And Text "C32'
Silk To Solder Mask Clearance Constraint: (Collision < 10mil) Between Pad U21-4(6374.803mil,-2529.528mil) on Top Layer And Text "C32'
Silk To Solder Mask Clearance Constraint: (3.808mil < 10mil) Between Pad U2-2(3280.512mil,-3552.165mil) on Top Layer And Text "TH_TP1'
Silk To Solder Mask Clearance Constraint: (Collision < 10mil) Between Pad U22-1(6774mil,-2529.708mil) on Top Layer And Text "C34'
Silk To Solder Mask Clearance Constraint: (Collision < 10mil) Between Pad U22-2(6824mil,-2529.708mil) on Top Layer And Text "C34'
Silk To Solder Mask Clearance Constraint: (1.445mil < 10mil) Between Pad U22-3(6874mil,-2529.708mil) on Top Layer And Text "C34'
Silk To Solder Mask Clearance Constraint: (Collision < 10mil) Between Pad U22-4(6924mil,-2529.708mil) on Top Layer And Text "C34'
Silk To Solder Mask Clearance Constraint: (8.613mil < 10mil) Between Pad U2-3(3330.512mil,-3552.165mil) on Top Layer And Text "TH_TP1'
Silk To Solder Mask Clearance Constraint: (Collision < 10mil) Between Pad U23-8(2181.3mil,-2430.118mil) on Top Layer And Text "C46'
Silk To Solder Mask Clearance Constraint: (8.676mil < 10mil) Between Pad U2-4(3380.512mil,-3552.165mil) on Top Layer And Text "TH_TP1'
Silk To Solder Mask Clearance Constraint: (4.083mil < 10mil) Between Pad U24-5(779.331mil,-2430.118mil) on Top Layer And Text "R33'
Silk To Solder Mask Clearance Constraint: (Collision < 10mil) Between Pad U24-6(829.331mil,-2430.118mil) on Top Layer And Text "R33'
Silk To Solder Mask Clearance Constraint: (Collision < 10mil) Between Pad U24-7(879.331mil,-2430.118mil) on Top Layer And Text "R33'
Silk To Solder Mask Clearance Constraint: (Collision < 10mil) Between Pad U24-8(929.331mil,-2430.118mil) on Top Layer And Text "C48'
Silk To Solder Mask Clearance Constraint: (Collision < 10mil) Between Pad U24-8(929.331mil,-2430.118mil) on Top Layer And Text "R33'
Silk To Solder Mask Clearance Constraint: (3.792mil < 10mil) Between Pad U2-5(3430.512mil,-3552.165mil) on Top Layer And Text "TH_TP1'
Silk To Solder Mask Clearance Constraint: (Collision < 10mil) Between Pad U25-8(4819.095mil,-2430.118mil) on Top Layer And Text "C50'
Silk To Solder Mask Clearance Constraint: (Collision < 10mil) Between Pad U2-6(3480.512mil,-3552.165mil) on Top Layer And Text "C6'
Silk To Solder Mask Clearance Constraint: (3.792mil < 10mil) Between Pad U2-6(3480.512mil,-3552.165mil) on Top Layer And Text "TH_TP1'
Silk To Solder Mask Clearance Constraint: (8.752mil < 10mil) Between Pad U26-6(3380.512mil,-2430.118mil) on Top Layer And Text "TP24'
Silk To Solder Mask Clearance Constraint: (Collision < 10mil) Between Pad U26-7(3430.512mil,-2430.118mil) on Top Layer And Text "TP24'
Silk To Solder Mask Clearance Constraint: (Collision < 10mil) Between Pad U26-8(3480.512mil,-2430.118mil) on Top Layer And Text "C52'
Silk To Solder Mask Clearance Constraint: (Collision < 10mil) Between Pad U26-8(3480.512mil,-2430.118mil) on Top Layer And Text "TP24'
Silk To Solder Mask Clearance Constraint: (Collision < 10mil) Between Pad U2-7(3530.512mil,-3552.165mil) on Top Layer And Text "C6'
Silk To Solder Mask Clearance Constraint: (3.813mil < 10mil) Between Pad U2-7(3530.512mil,-3552.165mil) on Top Layer And Text "TH_TP1'
Silk To Solder Mask Clearance Constraint: (Collision < 10mil) Between Pad U27-1(7492.323mil,-2215.551mil) on Top Layer And Text "R39'
Silk To Solder Mask Clearance Constraint: (Collision < 10mil) Between Pad U27-2(7442.323mil,-2215.551mil) on Top Layer And Text "R39'
Silk To Solder Mask Clearance Constraint: (Collision < 10mil) Between Pad U27-3(7392.323mil,-2215.551mil) on Top Layer And Text "R39'
Silk To Solder Mask Clearance Constraint: (8.565mil < 10mil) Between Pad U27-4(7342.323mil,-2215.551mil) on Top Layer And Text "R39'
Silk To Solder Mask Clearance Constraint: (Collision < 10mil) Between Pad U27-8(7492.323mil,-2430.118mil) on Top Layer And Text "C54'
Silk To Solder Mask Clearance Constraint: (7.567mil < 10mil) Between Pad U2-8(3580.512mil,-3552.165mil) on Top Layer And Text "C6'
Silk To Solder Mask Clearance Constraint: (Collision < 10mil) Between Pad U28-8(6064.567mil,-2419.291mil) on Top Layer And Text "C56'
Silk To Solder Mask Clearance Constraint: (Collision < 10mil) Between Pad U3-6(3154.669mil,-2677.165mil) on Top Layer And Text "C8'
Silk To Solder Mask Clearance Constraint: (Collision < 10mil) Between Pad U3-7(3154.669mil,-2657.48mil) on Top Layer And Text "C8'
Silk To Solder Mask Clearance Constraint: (Collision < 10mil) Between Pad U3-8(3154.669mil,-2637.795mil) on Top Layer And Text "C8'
Silk To Solder Mask Clearance Constraint: (3.245mil < 10mil) Between Pad U3-9(3154.669mil,-2618.11mil) on Top Layer And Text "C8'
Silk To Solder Mask Clearance Constraint: (7.317mil < 10mil) Between Pad U8-4(2586.811mil,-1471.457mil) on Top Layer And Text "C17'
Silk To Solder Mask Clearance Constraint: (7.878mil < 10mil) Between Pad U8-5(2661.615mil,-1471.457mil) on Top Layer And Text "C15'
Silk To Solder Mask Clearance Constraint: (6.207mil < 10mil) Between Pad U8-5(2661.615mil,-1471.457mil) on Top Layer And Text "C17'
Silk To Solder Mask Clearance Constraint: (9.221mil < 10mil) Between Pad U9-5(7830.709mil,-1476.378mil) on Top Layer And Text "C20'

Silk to Silk (Clearance=10mil) (All),(All)
Silk To Silk Clearance Constraint: (Collision < 10mil) Between Arc (1033.465mil,-2417.323mil) on Top Overlay And Text "C48" (908.536mil,-2475.409mil)
Silk To Silk Clearance Constraint: (Collision < 10mil) Between Arc (2367.52mil,-1673.858mil) on Top Overlay And Text "TP20" (2242.406mil,-1718.547mil)
Silk To Silk Clearance Constraint: (Collision < 10mil) Between Arc (2397.52mil,-1708.858mil) on Top Overlay And Text "TP20" (2242.406mil,-1718.547mil)
Silk To Silk Clearance Constraint: (Collision < 10mil) Between Arc (3590.748mil,-2509.843mil) on Top Overlay And Text "TP24" (3809.013mil,-2508.508mil)
Silk To Silk Clearance Constraint: (Collision < 10mil) Between Arc (3631.89mil,-2417.323mil) on Top Overlay And Text "C52" (3460.284mil,-2455.095mil)
Silk To Silk Clearance Constraint: (3.894mil < 10mil) Between Arc (4156.299mil,-2509.843mil) on Top Overlay And Text "C36" (4169.638mil,-2572.984mil)
Silk To Silk Clearance Constraint: (Collision < 10mil) Between Arc (4985.63mil,-1693.543mil) on Top Overlay And Text "TP26" (4872.327mil,-1751.618mil)
Silk To Silk Clearance Constraint: (Collision < 10mil) Between Arc (5015.63mil,-1728.543mil) on Top Overlay And Text "TP26" (4872.327mil,-1751.618mil)
Silk To Silk Clearance Constraint: (Collision < 10mil) Between Arc (6191.339mil,-2529.528mil) on Top Overlay And Text "C32" (6204.788mil,-2566.63mil)
Silk To Silk Clearance Constraint: (1.686mil < 10mil) Between Arc (6232.481mil,-2437.008mil) on Top Overlay And Text "C56" (6044.402mil,-2435.724mil)
Silk To Silk Clearance Constraint: (Collision < 10mil) Between Arc (6740.535mil,-2529.708mil) on Top Overlay And Text "C34" (6753.032mil,-2573.724mil)
Silk To Silk Clearance Constraint: (Collision < 10mil) Between Arc (7525.788mil,-2215.551mil) on Top Overlay And Text "R39" (7513.675mil,-2175.088mil)
Silk To Silk Clearance Constraint: (Collision < 10mil) Between Arc (7594.37mil,-1708.858mil) on Top Overlay And Text "TP30" (7506.185mil,-1757.524mil)
Silk To Silk Clearance Constraint: (3.858mil < 10mil) Between Text "1" (1893.126mil,-3405.819mil) on Top Overlay And Track
Silk To Silk Clearance Constraint: (9.515mil < 10mil) Between Text "1" (5720.473mil,-3677.165mil) on Top Overlay And Text "C40'
Silk To Silk Clearance Constraint: (7.806mil < 10mil) Between Text "1" (5720.473mil,-3677.165mil) on Top Overlay And Track
Silk To Silk Clearance Constraint: (7.795mil < 10mil) Between Text "5" (1673.229mil,-1081.102mil) on Top Overlay And Track
Silk To Silk Clearance Constraint: (7.795mil < 10mil) Between Text "5" (3350.394mil,-1081.102mil) on Top Overlay And Track
Silk To Silk Clearance Constraint: (7.795mil < 10mil) Between Text "5" (4271.654mil,-1081.102mil) on Top Overlay And Track
Silk To Silk Clearance Constraint: (7.795mil < 10mil) Between Text "5" (5951.772mil,-1081.102mil) on Top Overlay And Track
Silk To Silk Clearance Constraint: (7.795mil < 10mil) Between Text "5" (6870.079mil,-1081.102mil) on Top Overlay And Track
Silk To Silk Clearance Constraint: (7.795mil < 10mil) Between Text "5" (751.969mil,-1081.102mil) on Top Overlay And Track
Silk To Silk Clearance Constraint: (7.795mil < 10mil) Between Text "8" (6082.677mil,-3318.898mil) on Top Overlay And Track
Silk To Silk Clearance Constraint: (Collision < 10mil) Between Text "C11" (2431.074mil,-2568.435mil) on Top Overlay And Text "R19'
Silk To Silk Clearance Constraint: (Collision < 10mil) Between Text "C12" (5235.339mil,-1589.575mil) on Top Overlay And Text "C13'
Silk To Silk Clearance Constraint: (Collision < 10mil) Between Text "C12" (5235.339mil,-1589.575mil) on Top Overlay And Track
Silk To Silk Clearance Constraint: (Collision < 10mil) Between Text "C14" (5598.26mil,-1596.392mil) on Top Overlay And Text "C16'
Silk To Silk Clearance Constraint: (Collision < 10mil) Between Text "C14" (5598.26mil,-1596.392mil) on Top Overlay And Text "U15'
Silk To Silk Clearance Constraint: (Collision < 10mil) Between Text "C15" (2641.402mil,-1563.409mil) on Top Overlay And Text "C17'
Silk To Silk Clearance Constraint: (Collision < 10mil) Between Text "C15" (2641.402mil,-1563.409mil) on Top Overlay And Track
Silk To Silk Clearance Constraint: (Collision < 10mil) Between Text "C18" (7893.677mil,-1674.577mil) on Top Overlay And Text "R24'
Silk To Silk Clearance Constraint: (Collision < 10mil) Between Text "C18" (7893.677mil,-1674.577mil) on Top Overlay And Text "TP16'
Silk To Silk Clearance Constraint: (7.611mil < 10mil) Between Text "C18" (7893.677mil,-1674.577mil) on Top Overlay And Text "TP30'
Silk To Silk Clearance Constraint: (Collision < 10mil) Between Text "C19" (3006.89mil,-1549.26mil) on Top Overlay And Text "U12'
Silk To Silk Clearance Constraint: (Collision < 10mil) Between Text "C21" (3012.195mil,-1577.486mil) on Top Overlay And Text "R26'
Silk To Silk Clearance Constraint: (Collision < 10mil) Between Text "C22" (2159.969mil,-1473.795mil) on Top Overlay And Text "U11'
Silk To Silk Clearance Constraint: (Collision < 10mil) Between Text "C24" (825.827mil,-1600.591mil) on Top Overlay And Text "TP22'
Silk To Silk Clearance Constraint: (Collision < 10mil) Between Text "C25" (7341.402mil,-1473.937mil) on Top Overlay And Text "TP15'
Silk To Silk Clearance Constraint: (Collision < 10mil) Between Text "C25" (7341.402mil,-1473.937mil) on Top Overlay And Text "U14'
Silk To Silk Clearance Constraint: (Collision < 10mil) Between Text "C27" (4767.402mil,-1493.409mil) on Top Overlay And Text "U16'
Silk To Silk Clearance Constraint: (9.019mil < 10mil) Between Text "C29" (1005.402mil,-1923.409mil) on Top Overlay And Text "C47'
Silk To Silk Clearance Constraint: (Collision < 10mil) Between Text "C31" (1507.674mil,-2090.647mil) on Top Overlay And Track
Silk To Silk Clearance Constraint: (5.836mil < 10mil) Between Text "C33" (6204.788mil,-1943.409mil) on Top Overlay And Text "C55'
Silk To Silk Clearance Constraint: (9.019mil < 10mil) Between Text "C39" (5545.662mil,-3756.984mil) on Top Overlay And Text "C40'
Silk To Silk Clearance Constraint: (Collision < 10mil) Between Text "C4" (3109.733mil,-3150.268mil) on Top Overlay And Text "C5'
Silk To Silk Clearance Constraint: (Collision < 10mil) Between Text "C4" (3109.733mil,-3150.268mil) on Top Overlay And Text "TP6" (3096.56mil,-3209.5mil)
Silk To Silk Clearance Constraint: (Collision < 10mil) Between Text "C42" (5775.402mil,-3852.409mil) on Top Overlay And Text "C43'
Silk To Silk Clearance Constraint: (Collision < 10mil) Between Text "C42" (5775.402mil,-3852.409mil) on Top Overlay And Text "C44'
Silk To Silk Clearance Constraint: (Collision < 10mil) Between Text "C42" (5775.402mil,-3852.409mil) on Top Overlay And Track
Silk To Silk Clearance Constraint: (Collision < 10mil) Between Text "C42" (5775.402mil,-3852.409mil) on Top Overlay And Track
Silk To Silk Clearance Constraint: (Collision < 10mil) Between Text "C43" (5697.402mil,-3852.409mil) on Top Overlay And Text "C44'
Silk To Silk Clearance Constraint: (Collision < 10mil) Between Text "C43" (5697.402mil,-3852.409mil) on Top Overlay And Track

Silk to Silk (Clearance=10mil) (All),(All)
Silk To Silk Clearance Constraint: (Collision < 10mil) Between Text "C43" (5697.402mil,-3852.409mil) on Top Overlay And Track
Silk To Silk Clearance Constraint: (Collision < 10mil) Between Text "C44" (5618.402mil,-3852.409mil) on Top Overlay And Track
Silk To Silk Clearance Constraint: (Collision < 10mil) Between Text "C44" (5618.402mil,-3852.409mil) on Top Overlay And Track
Silk To Silk Clearance Constraint: (Collision < 10mil) Between Text "C45" (2199.591mil,-2080.126mil) on Top Overlay And Text "R28'
Silk To Silk Clearance Constraint: (Collision < 10mil) Between Text "C45" (2199.591mil,-2080.126mil) on Top Overlay And Text "R29'
Silk To Silk Clearance Constraint: (Collision < 10mil) Between Text "C46" (2162.311mil,-2475.409mil) on Top Overlay And Text "TP23'
Silk To Silk Clearance Constraint: (Collision < 10mil) Between Text "C47" (908.402mil,-2002.409mil) on Top Overlay And Text "U17'
Silk To Silk Clearance Constraint: (Collision < 10mil) Between Text "C48" (908.536mil,-2475.409mil) on Top Overlay And Text "R33" (781.126mil,-2501mil)
Silk To Silk Clearance Constraint: (Collision < 10mil) Between Text "C48" (908.536mil,-2475.409mil) on Top Overlay And Track
Silk To Silk Clearance Constraint: (Collision < 10mil) Between Text "C48" (908.536mil,-2475.409mil) on Top Overlay And Track
Silk To Silk Clearance Constraint: (7.109mil < 10mil) Between Text "C49" (4850.827mil,-2067.748mil) on Top Overlay And Text "R34'
Silk To Silk Clearance Constraint: (Collision < 10mil) Between Text "C49" (4850.827mil,-2067.748mil) on Top Overlay And Text "R35'
Silk To Silk Clearance Constraint: (Collision < 10mil) Between Text "C50" (4798.733mil,-2452.457mil) on Top Overlay And Track
Silk To Silk Clearance Constraint: (5.521mil < 10mil) Between Text "C50" (4798.733mil,-2452.457mil) on Top Overlay And Track
Silk To Silk Clearance Constraint: (Collision < 10mil) Between Text "C51" (3260.535mil,-1880.384mil) on Top Overlay And Text "R36'
Silk To Silk Clearance Constraint: (Collision < 10mil) Between Text "C51" (3260.535mil,-1880.384mil) on Top Overlay And Text "R37'
Silk To Silk Clearance Constraint: (Collision < 10mil) Between Text "C52" (3460.284mil,-2455.095mil) on Top Overlay And Text "TP24'
Silk To Silk Clearance Constraint: (0.35mil < 10mil) Between Text "C52" (3460.284mil,-2455.095mil) on Top Overlay And Track
Silk To Silk Clearance Constraint: (7.291mil < 10mil) Between Text "C52" (3460.284mil,-2455.095mil) on Top Overlay And Track
Silk To Silk Clearance Constraint: (Collision < 10mil) Between Text "C52" (3460.284mil,-2455.095mil) on Top Overlay And Track
Silk To Silk Clearance Constraint: (Collision < 10mil) Between Text "C52" (3460.284mil,-2455.095mil) on Top Overlay And Track
Silk To Silk Clearance Constraint: (8.089mil < 10mil) Between Text "C53" (7515.087mil,-2071.984mil) on Top Overlay And Text "R38'
Silk To Silk Clearance Constraint: (Collision < 10mil) Between Text "C53" (7515.087mil,-2071.984mil) on Top Overlay And Track
Silk To Silk Clearance Constraint: (0.24mil < 10mil) Between Text "C54" (7475.662mil,-2454.984mil) on Top Overlay And Track
Silk To Silk Clearance Constraint: (4.691mil < 10mil) Between Text "C54" (7475.662mil,-2454.984mil) on Top Overlay And Track
Silk To Silk Clearance Constraint: (6.182mil < 10mil) Between Text "C54" (7475.662mil,-2454.984mil) on Top Overlay And Track
Silk To Silk Clearance Constraint: (Collision < 10mil) Between Text "C55" (6044.292mil,-2015.205mil) on Top Overlay And Text "U21'
Silk To Silk Clearance Constraint: (Collision < 10mil) Between Text "C56" (6044.402mil,-2435.724mil) on Top Overlay And Track
Silk To Silk Clearance Constraint: (1.206mil < 10mil) Between Text "C56" (6044.402mil,-2435.724mil) on Top Overlay And Track
Silk To Silk Clearance Constraint: (Collision < 10mil) Between Text "C56" (6044.402mil,-2435.724mil) on Top Overlay And Track
Silk To Silk Clearance Constraint: (Collision < 10mil) Between Text "C57" (579.205mil,-1635.092mil) on Top Overlay And Text "U13'
Silk To Silk Clearance Constraint: (Collision < 10mil) Between Text "C6" (3460.142mil,-3564.928mil) on Top Overlay And Track
Silk To Silk Clearance Constraint: (4.608mil < 10mil) Between Text "D1" (2341.903mil,-3367.589mil) on Top Overlay And Track
Silk To Silk Clearance Constraint: (1.736mil < 10mil) Between Text "F1" (1955.252mil,-3788.559mil) on Top Overlay And Track
Silk To Silk Clearance Constraint: (Collision < 10mil) Between Text "LED3" (5441.402mil,-3237.409mil) on Top Overlay And Text "R46'
Silk To Silk Clearance Constraint: (Collision < 10mil) Between Text "P1" (4043.441mil,-2880.386mil) on Top Overlay And Track
Silk To Silk Clearance Constraint: (7.042mil < 10mil) Between Text "P16" (443.376mil,-803.322mil) on Top Overlay And Text "R12'
Silk To Silk Clearance Constraint: (Collision < 10mil) Between Text "Q1" (2759.212mil,-3525.205mil) on Top Overlay And Track
Silk To Silk Clearance Constraint: (Collision < 10mil) Between Text "R12" (339.001mil,-880.345mil) on Top Overlay And Track
Silk To Silk Clearance Constraint: (Collision < 10mil) Between Text "R12" (339.001mil,-880.345mil) on Top Overlay And Track
Silk To Silk Clearance Constraint: (Collision < 10mil) Between Text "R15" (5523.055mil,-1122.409mil) on Top Overlay And Text "TP9'
Silk To Silk Clearance Constraint: (Collision < 10mil) Between Text "R18" (2539.892mil,-2491.179mil) on Top Overlay And Text "R19'
Silk To Silk Clearance Constraint: (Collision < 10mil) Between Text "R24" (7747.402mil,-1693.409mil) on Top Overlay And Text "TP16'
Silk To Silk Clearance Constraint: (Collision < 10mil) Between Text "R28" (2048.402mil,-2018.583mil) on Top Overlay And Text "R29'
Silk To Silk Clearance Constraint: (Collision < 10mil) Between Text "R3" (2752.822mil,-3379.388mil) on Top Overlay And Track
Silk To Silk Clearance Constraint: (Collision < 10mil) Between Text "R30" (779.869mil,-1906.96mil) on Top Overlay And Text "R31'
Silk To Silk Clearance Constraint: (8.39mil < 10mil) Between Text "R32" (781.756mil,-2579.37mil) on Top Overlay And Text "R33" (781.126mil,-2501mil)
Silk To Silk Clearance Constraint: (Collision < 10mil) Between Text "R32" (781.756mil,-2579.37mil) on Top Overlay And Text "TH_TP2'
Silk To Silk Clearance Constraint: (Collision < 10mil) Between Text "R33" (781.126mil,-2501mil) on Top Overlay And Text "TH_TP2'
Silk To Silk Clearance Constraint: (Collision < 10mil) Between Text "R34" (4686.229mil,-2008.921mil) on Top Overlay And Text "R35'
Silk To Silk Clearance Constraint: (Collision < 10mil) Between Text "R36" (3227.113mil,-1918.387mil) on Top Overlay And Text "R37'
Silk To Silk Clearance Constraint: (7.119mil < 10mil) Between Text "R36" (3227.113mil,-1918.387mil) on Top Overlay And Text "TP18'

Silk to Silk (Clearance=10mil) (All),(All)
Silk To Silk Clearance Constraint: (Collision < 10mil) Between Text "R4" (2752.822mil,-3279.099mil) on Top Overlay And Track
Silk To Silk Clearance Constraint: (Collision < 10mil) Between Text "R40" (5906.709mil,-1920.039mil) on Top Overlay And Text "R41'
Silk To Silk Clearance Constraint: (Collision < 10mil) Between Text "R46" (5641.087mil,-3268.409mil) on Top Overlay And Track
Silk To Silk Clearance Constraint: (Collision < 10mil) Between Text "R47" (5640.914mil,-3386.41mil) on Top Overlay And Track
Silk To Silk Clearance Constraint: (Collision < 10mil) Between Text "R48" (5641.402mil,-3504.409mil) on Top Overlay And Track
Silk To Silk Clearance Constraint: (Collision < 10mil) Between Text "TP1" (2635.5mil,-2425.5mil) on Top Overlay And Track
Silk To Silk Clearance Constraint: (3.609mil < 10mil) Between Text "TP10" (386.696mil,-1170.87mil) on Top Overlay And Track
Silk To Silk Clearance Constraint: (Collision < 10mil) Between Text "TP13" (2447.13mil,-1309.689mil) on Top Overlay And Text "U8'
Silk To Silk Clearance Constraint: (Collision < 10mil) Between Text "TP14" (2573.311mil,-1875.634mil) on Top Overlay And Track
Silk To Silk Clearance Constraint: (Collision < 10mil) Between Text "TP15" (7427.515mil,-1498.494mil) on Top Overlay And Text "U14'
Silk To Silk Clearance Constraint: (Collision < 10mil) Between Text "TP16" (7663.666mil,-1757.524mil) on Top Overlay And Text "TP30'
Silk To Silk Clearance Constraint: (Collision < 10mil) Between Text "TP17" (2808.42mil,-1250.463mil) on Top Overlay And Text "U10'
Silk To Silk Clearance Constraint: (2.829mil < 10mil) Between Text "TP17" (2808.42mil,-1250.463mil) on Top Overlay And Track
Silk To Silk Clearance Constraint: (6.709mil < 10mil) Between Text "TP19" (2017.8mil,-1716.541mil) on Top Overlay And Text "TP20'
Silk To Silk Clearance Constraint: (5.461mil < 10mil) Between Text "TP2" (2508.154mil,-3666.972mil) on Top Overlay And Track
Silk To Silk Clearance Constraint: (Collision < 10mil) Between Text "TP20" (2242.406mil,-1718.547mil) on Top Overlay And Track
Silk To Silk Clearance Constraint: (Collision < 10mil) Between Text "TP20" (2242.406mil,-1718.547mil) on Top Overlay And Track
Silk To Silk Clearance Constraint: (Collision < 10mil) Between Text "TP20" (2242.406mil,-1718.547mil) on Top Overlay And Track
Silk To Silk Clearance Constraint: (8.76mil < 10mil) Between Text "TP21" (951.067mil,-1462.248mil) on Top Overlay And Text "TP22'
Silk To Silk Clearance Constraint: (Collision < 10mil) Between Text "TP24" (3392.012mil,-2508.508mil) on Top Overlay And Track
Silk To Silk Clearance Constraint: (Collision < 10mil) Between Text "TP24" (3392.012mil,-2508.508mil) on Top Overlay And Track
Silk To Silk Clearance Constraint: (Collision < 10mil) Between Text "TP25" (4710.91mil,-1751.618mil) on Top Overlay And Text "TP26'
Silk To Silk Clearance Constraint: (Collision < 10mil) Between Text "TP25" (4710.91mil,-1751.618mil) on Top Overlay And Track
Silk To Silk Clearance Constraint: (Collision < 10mil) Between Text "TP25" (4710.91mil,-1751.618mil) on Top Overlay And Track
Silk To Silk Clearance Constraint: (Collision < 10mil) Between Text "TP26" (4872.327mil,-1751.618mil) on Top Overlay And Track
Silk To Silk Clearance Constraint: (Collision < 10mil) Between Text "TP26" (4872.327mil,-1751.618mil) on Top Overlay And Track
Silk To Silk Clearance Constraint: (Collision < 10mil) Between Text "TP26" (4872.327mil,-1751.618mil) on Top Overlay And Track
Silk To Silk Clearance Constraint: (5.876mil < 10mil) Between Text "TP27" (3492.398mil,-1377.431mil) on Top Overlay And Track
Silk To Silk Clearance Constraint: (Collision < 10mil) Between Text "TP29" (7307.359mil,-1762.274mil) on Top Overlay And Text "TP30'
Silk To Silk Clearance Constraint: (0.524mil < 10mil) Between Text "TP29" (7307.359mil,-1762.274mil) on Top Overlay And Track
Silk To Silk Clearance Constraint: (0.443mil < 10mil) Between Text "TP29" (7307.359mil,-1762.274mil) on Top Overlay And Track
Silk To Silk Clearance Constraint: (2.194mil < 10mil) Between Text "TP30" (7506.185mil,-1757.524mil) on Top Overlay And Track
Silk To Silk Clearance Constraint: (Collision < 10mil) Between Text "TP30" (7506.185mil,-1757.524mil) on Top Overlay And Track
Silk To Silk Clearance Constraint: (Collision < 10mil) Between Text "TP30" (7506.185mil,-1757.524mil) on Top Overlay And Track
Silk To Silk Clearance Constraint: (6.791mil < 10mil) Between Text "TP31" (6108.547mil,-1503.587mil) on Top Overlay And Text "TP32'
Silk To Silk Clearance Constraint: (Collision < 10mil) Between Text "TP5" (2622.5mil,-3174.5mil) on Top Overlay And Track
Silk To Silk Clearance Constraint: (Collision < 10mil) Between Text "TP7" (5025.87mil,-1309.689mil) on Top Overlay And Text "U6'
Silk To Silk Clearance Constraint: (Collision < 10mil) Between Text "U1" (221.402mil,-2175.409mil) on Top Overlay And Track

Net Antennae (Tolerance=0mil) (All)
Net Antennae: Track (1211.614mil,-953.74mil)(1318.898mil,-846.457mil) on Top Layer
Net Antennae: Track (402.166mil,-1418.071mil)(475.158mil,-1345.079mil) on Top Layer
Net Antennae: Track (455.473mil,-1345.079mil)(455.473mil,-1319.488mil) on Top Layer