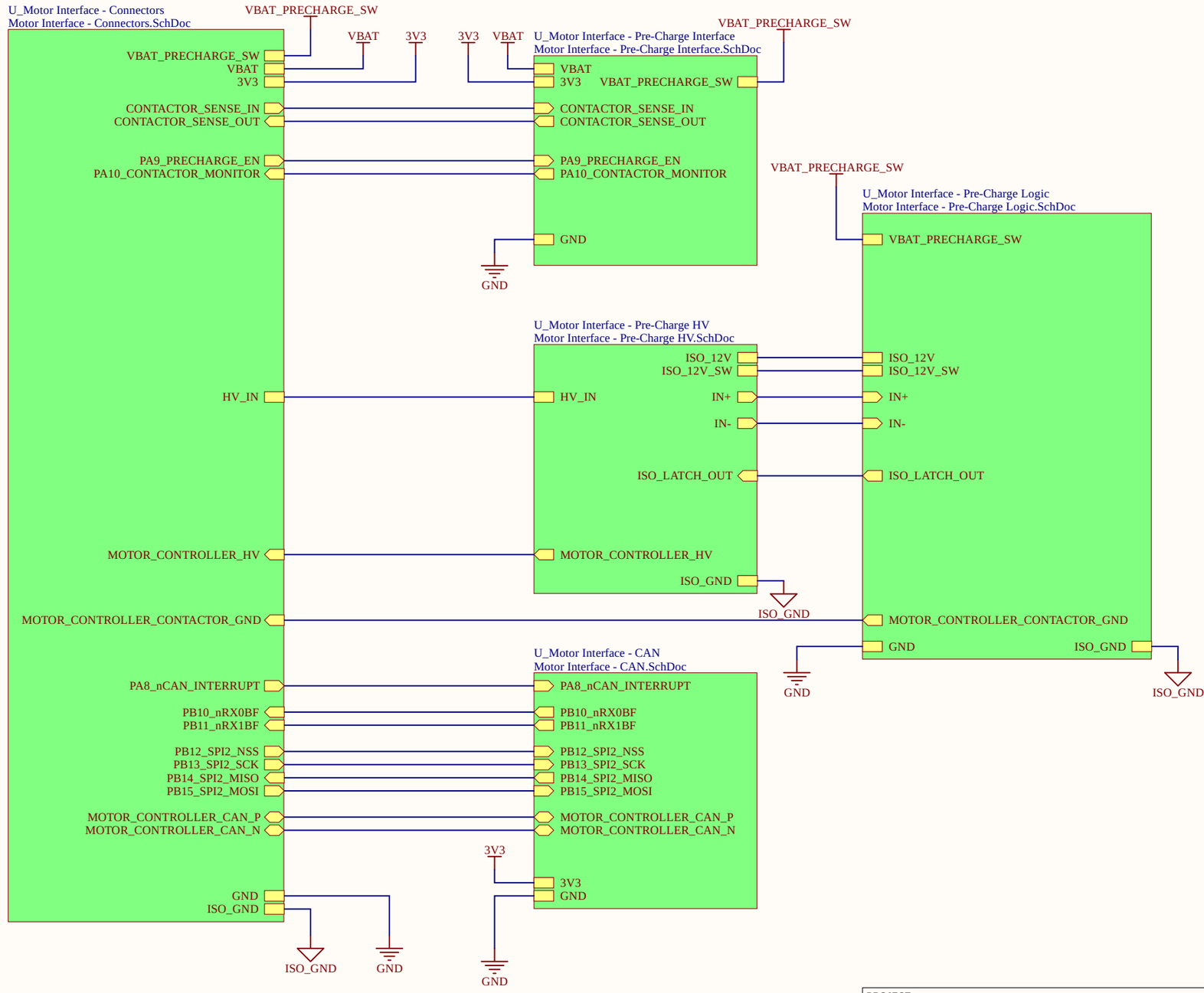

PROJECT	PreCharge.PrjPcb		
DOCUMENT	Title		
PART NUMBER	MS14004	VARIANT	01 - Standard
DRAWN BY	Taiping Li	REVISION	4.0
LAST MODIFIED	2019-01-18	SHEET	1 OF 6

MIDNIGHT SUN

Engineering 5 - 1002
University of Waterloo
(519) 888-4567 x32978
hardware@uwmidsun.com

Connectors

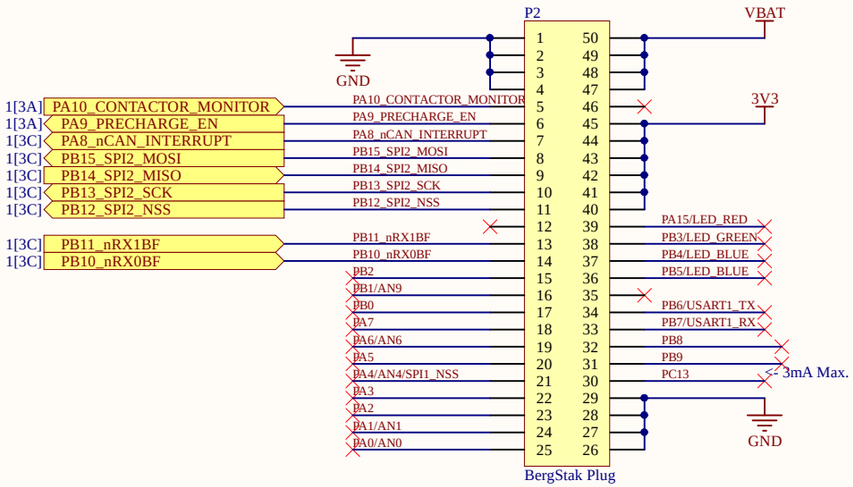

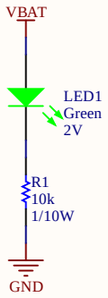

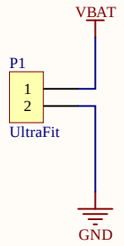

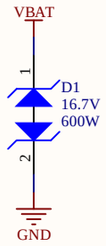

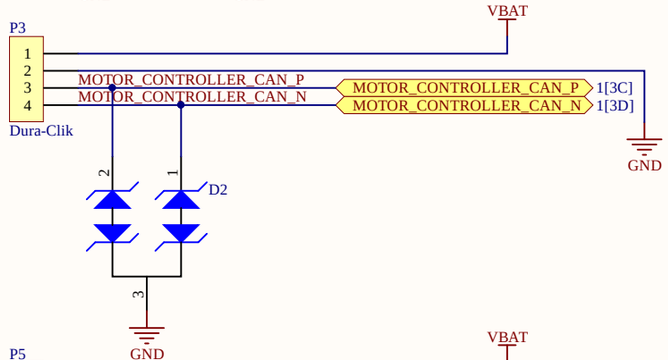

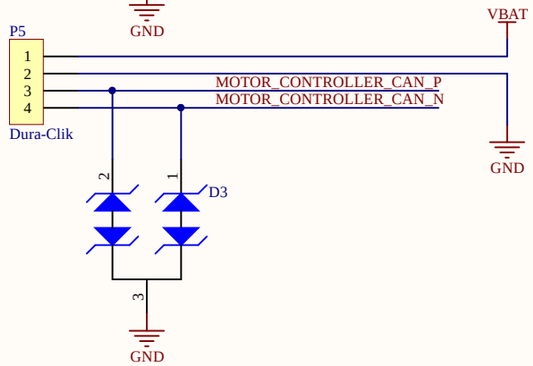

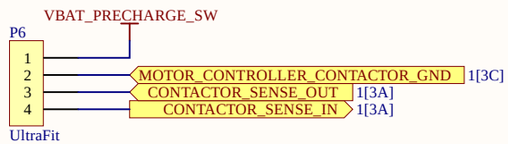

HV Connector

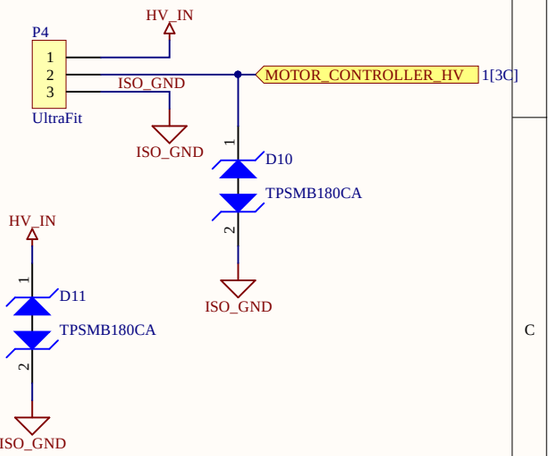

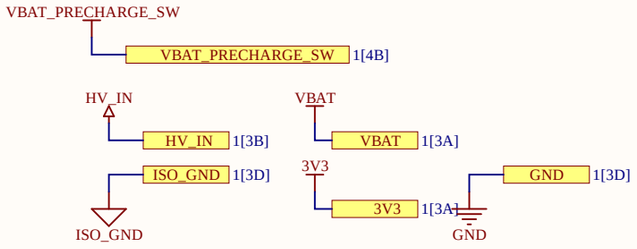

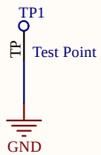

PROJECT	PreCharge.PrjPcb		
DOCUMENT	Motor Interface - Connectors		
PART NUMBER	MS14004	VARIANT	01 - Standard
DRAWN BY	Taiping Li	REVISION	4.0
LAST MODIFIED	2019-01-18	SHEET	2 OF 6

MIDNIGHT SUN

Engineering 5 - 1002
University of Waterloo
(519) 888-4567 x32978
hardware@uwmidsun.com

CAN Controller

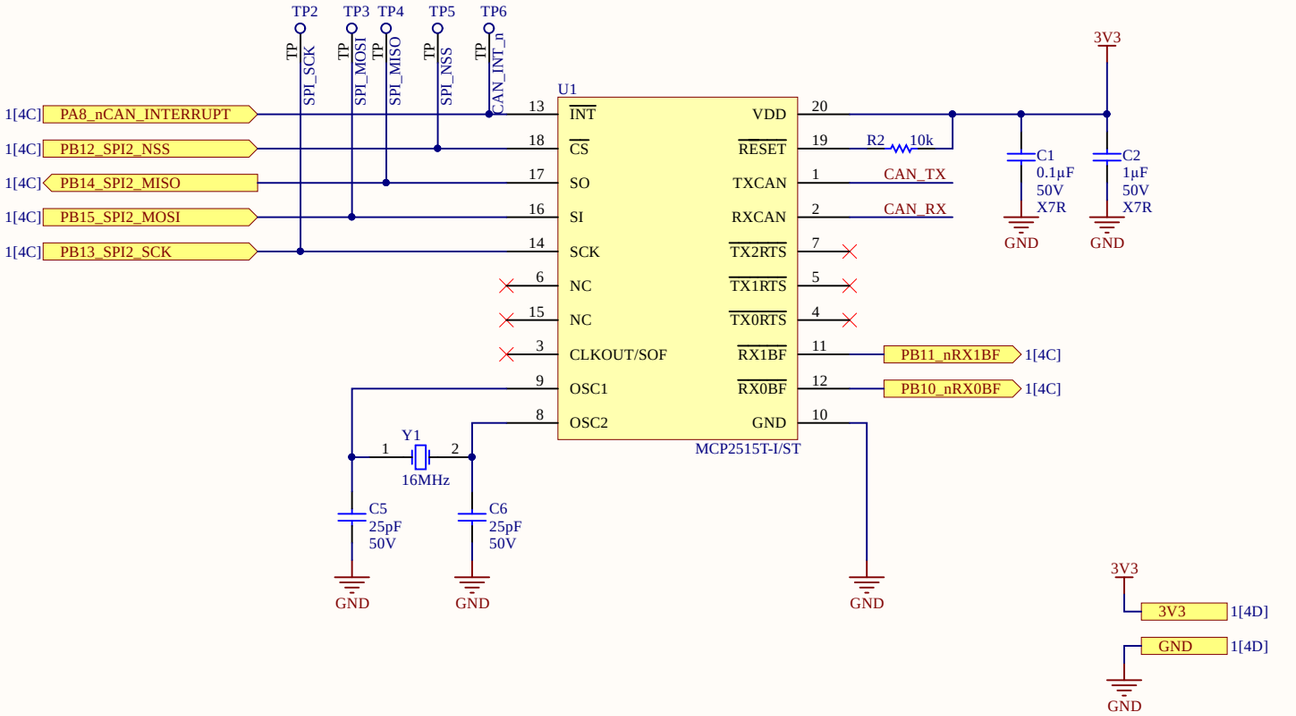

CAN Transceiver

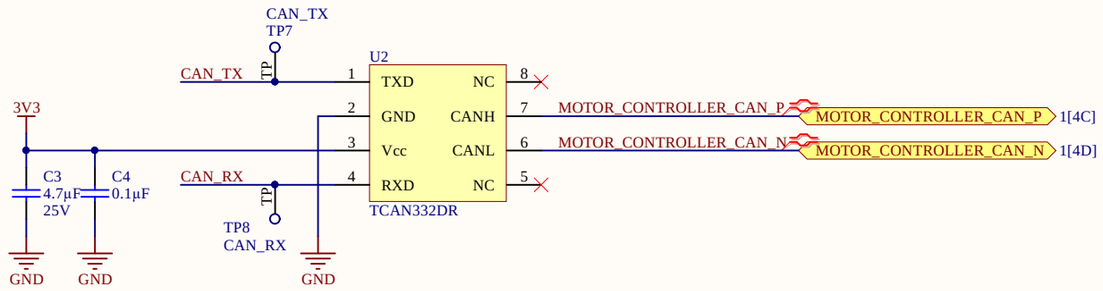

PROJECT	PreCharge.PrjPcb		MIDNIGHT SUN
DOCUMENT	Motor Interface - CAN		
PART NUMBER	MS14004	VARIANT	01 - Standard
DRAWN BY	Taiping Li	REVISION	4.0
LAST MODIFIED	2019-01-18	SHEET	3 OF 6

Engineering 5 - 1002
University of Waterloo
(519) 888-4567 x32978
hardware@uwmidsun.com

Precharge Control

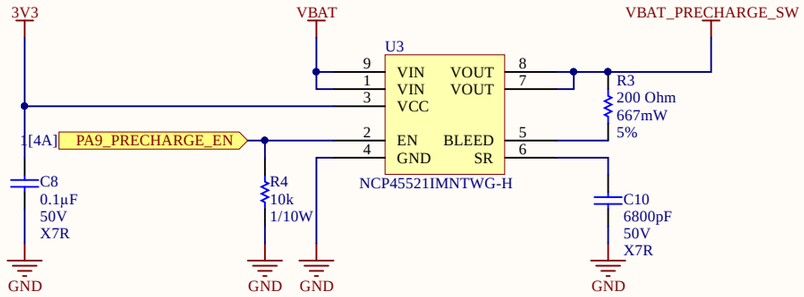

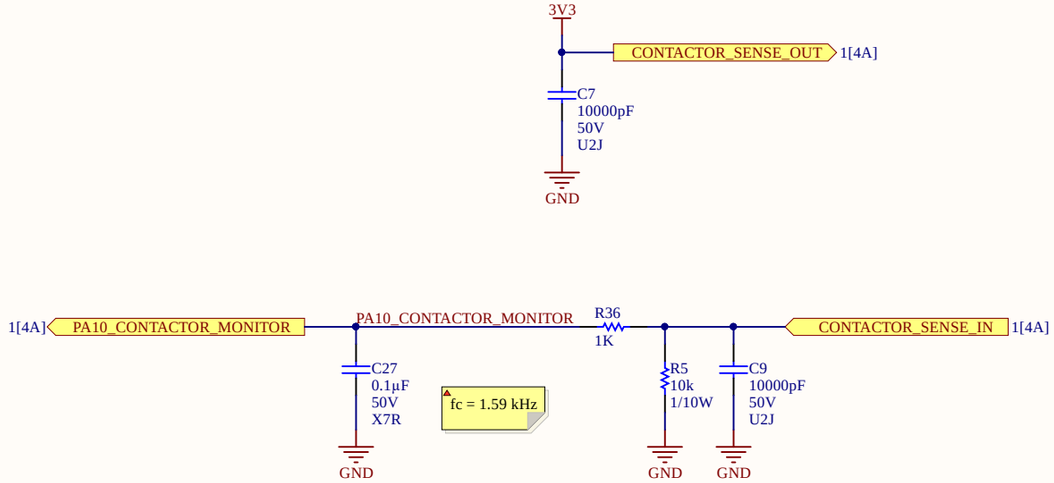

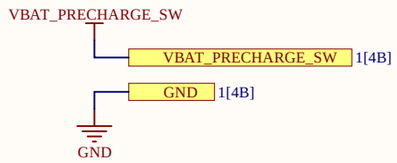

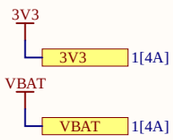

PROJECT	PreCharge.PrjPcb		MIDNIGHT SUN
DOCUMENT	Motor Interface - PreCharge Interface		
PART NUMBER	MS14004	VARIANT	01 - Standard
DRAWN BY	Taiping Li	REVISION	4.0
LAST MODIFIED	2019-01-18	SHEET	4 OF 6

Engineering 5 - 1002
University of Waterloo
(519) 888-4567 x32978
hardware@uwmidsun.com

Pre-Charge

Discharge

HV

HV_IN

M2

3A 450VDC
BK/PCC-3-R

F1

3A

HV_IN_FUSED

Q1
300W
500V
1R

Q2
300W
500V
1R

D4
16V

R13
250mW
29.4kR

R15
250mW
470kR

M1

HEATSINK 4xTO-247
345-1574-ND

R6
100W
18R

R7
100W
18R

R8
100W
18R

R9
100W
18R

R11
470k
0.25W
0.1%

R12
470k
0.25W
0.1%

D5
DIODE GEN PURP 800V 8A SMC
985mV
800V
8A

MOTOR_CONTROLLER_HV 1[4C]

F2
3A 450VDC
BK/PCC-3-R

R10
330R
100W

R14
330R
100W

M!1

HEATSINK 2xTO-247_1
345-1573-ND

ISO_12V

R16
10k
1/10W

nISO_LATCH_OUT

R20
22.1
1/10W

Q4
150W
650V

1[4B] ISO_LATCH_OUT

Q5
700mW
60V

IN- 1[4B]

IN+ 1[4B]

R17
29.4k
0.25W
1%

R23
2k
0.25W
0.1%

D6
16V

R18
33k
0.25W
0.1%

R22
0R
0.25W
1%

D7
16V

ISO_GND

HV Battery = 150V:
IN+: 9.84V
IN-: 9.39V

End pre-charge at 95% of VBAT

ISO_LATCH_OUT
0V: Pre-charge in progress
12V: Pre-charge complete

P-FET on HV_IN turns off when
pre-charge is complete

U4
TC7662BEOA713CT-ND
VIN
CAP+
CAP-
GND
VOUT
LV
BOOST
OSC

C11
2.2µF
25V
X5R

C12
25V
10µF

C13
25V
10µF

R19
40.2
1/10W

R21
10k
1/10W

DISC_GATE1

TP

Q3
500V
300W
IXTH6N50D2-ND

D8
16V

ISO_12V
ISO_12V 1[4B]

HV_IN
HV_IN 1[4B]

ISO_12V_SW
ISO_12V_SW 1[4B]

ISO_GND 1[4C]

PROJECT	PreCharge.PrjPcb
DOCUMENT	Motor Interface - PreCharge HV
PART NUMBER	MS14004
VARIANT	01 - Standard
DRAWN BY	Taiping Li
REVISION	4.0
LAST MODIFIED	2019-01-18
SHEET	5 OF 6

MIDNIGHT SUN

Engineering 5 - 1002
University of Waterloo
(519) 888-4567 x32978
hardware@uwmidsun.com

Logic

Motor Controller Contactor Driver

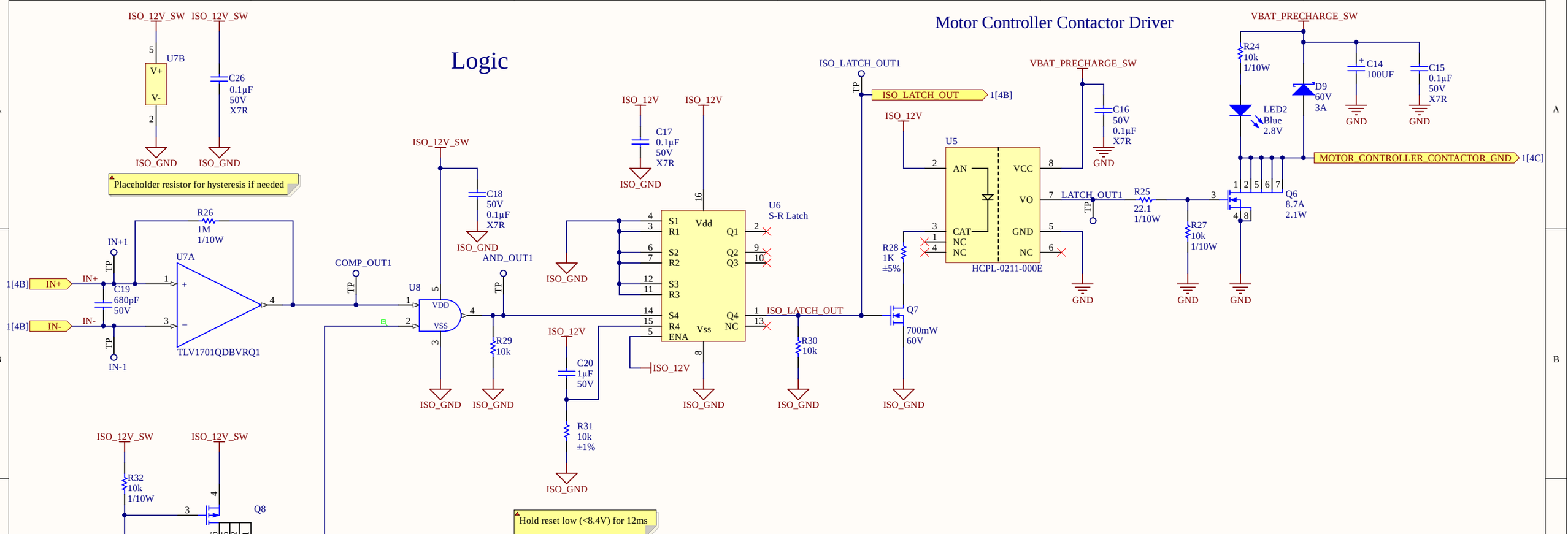

Isolated DC/DC

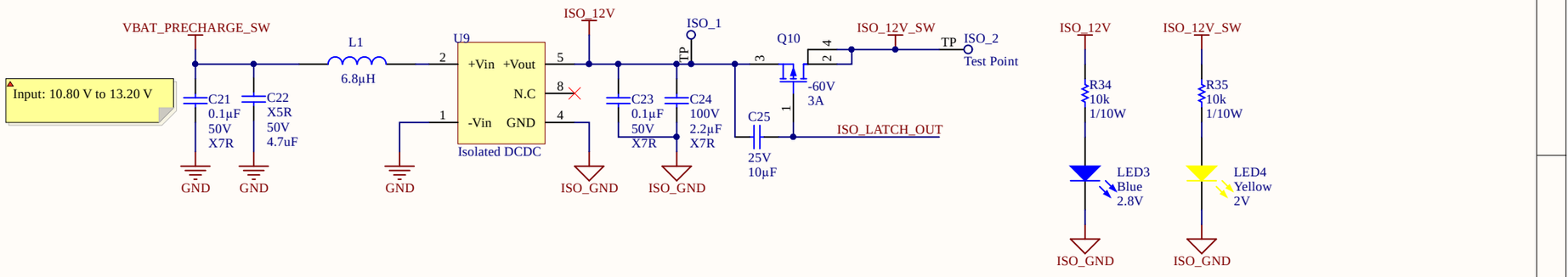

VBAT_PRECHARGE_SW 1[4B]

GND 1[4C]

ISO_12V_SW 1[4B]

ISO_GND 1[4C]

ISO_12V 1[4B]

PROJECT	PreCharge.PrjPcb		
DOCUMENT	Motor Interface - PreCharge Logic		
PART NUMBER	MS14004	VARIANT	01 - Standard
DRAWN BY	Taiping Li	REVISION	4.0
LAST MODIFIED	2019-01-18	SHEET	6 OF 6

MIDNIGHT SUN

Engineering 5 - 1002
University of Waterloo
(519) 888-4567 x32978
hardware@uwmidsun.com

Bill of Materials

Project:	PreCharge.PrjPcb
Revision:	4.0
Project Lead:	Taiping Li
Generated On:	2019-01-18 6:34:35 PM
Production Quantity:	1
Currency	CAD
Total Parts Count:	111

LibRef	Designator	Manufacturer 1	Manufacturer Part Number 1	Supplier 1	Supplier Part Number 1	Supplier Unit Price 1	Quantity	Supplier Subtotal 1
CAP CER 0.1UF 50V 10% X7R 0603	C1	Kyocera AVX	06035C-104KAT2A	Digi-Key	478-5052-1-ND	0.23	1	$ 0.23
CAP CER 1UF 50V 10% X7R 0603	C2	Taiyo Yuden	UMK107AB7105KA-T	Digi-Key	587-3247-1-ND	0.38	1	$ 0.38
CAP CER 4.7UF 25V 10% X5R 0603	C3	Murata	GRM188R61E475KE11D	Digi-Key	490-7203-1-ND	0.49	1	$ 0.49
CAP CER 0.1UF 50V 10% X5R 0603	C4	Kyocera AVX	06035C-104KAT2A	Digi-Key	478-5052-1-ND	0.23	1	$ 0.23
CAP CER 25PF 50V ±5% C0G/NP0 0603	C5	Samsung	CL10C250JB8NNNC	Digi-Key	1276-2244-1-ND	0.13	1	$ 0.13
CAP CER 25PF 50V ±5% C0G/NP0 0603	C6	Samsung	CL10C250JB8NNNC	Digi-Key	1276-2244-1-ND	0.13	1	$ 0.13
CAP CER 10nF 50V 5% X7R 0603	C7	KEMET	C0603C103J5JACTU	Digi-Key	399-13384-1-ND	0.49	1	$ 0.49
CAP CER 0.1UF 50V 10% X7R 0603	C8	Kyocera AVX	06035C-104KAT2A	Digi-Key	478-5052-1-ND	0.23	1	$ 0.23
CAP CER 10nF 50V 5% X7R 0603	C9	KEMET	C0603C103J5JACTU	Digi-Key	399-13384-1-ND	0.49	1	$ 0.49
CAP CER 6800pF 50V 10% X7R 0603	C10	Samsung	CL10B682KB8SFNC	Digi-Key	1276-2103-1-ND	0.13	1	$ 0.13
CAP CER 2.2UF 25V 10% X5R 0603	C11	Murata	GRM188R61E225KA12D	Digi-Key	490-10731-1-ND	0.23	1	$ 0.23
CAP CER 10uF 25V 10% X5R 0805	C12	Murata	GRM21BR61E106KA73L	Digi-Key	490-5523-1-ND	0.57	1	$ 0.57
CAP CER 10uF 25V 10% X5R 0805	C13	Murata	GRM21BR61E106KA73L	Digi-Key	490-5523-1-ND	0.57	1	$ 0.57
CAP ALUM 100UF 20% 35V SMD	C14	Panasonic	EEE1VA101XP	Digi-Key	PCE3951CT-ND	0.62	1	$ 0.62
CAP CER 0.1UF 50V 10% X7R 0603	C15	Kyocera AVX	06035C-104KAT2A	Digi-Key	478-5052-1-ND	0.23	1	$ 0.23
CAP CER 0.1UF 50V 10% X7R 0603	C16	Kyocera AVX	06035C-104KAT2A	Digi-Key	478-5052-1-ND	0.23	1	$ 0.23
CAP CER 0.1UF 50V 10% X7R 0603	C17	Kyocera AVX	06035C-104KAT2A	Digi-Key	478-5052-1-ND	0.23	1	$ 0.23
CAP CER 0.1UF 50V 10% X7R 0603	C18	Kyocera AVX	06035C-104KAT2A	Digi-Key	478-5052-1-ND	0.23	1	$ 0.23
CAP CER 680PF 50V C0G 0603	C19	Samsung	CL10C681JB8NNNC	Digi-Key	1276-1820-1-ND	0.21	1	$ 0.21
CAP CER 1UF 50V 10% X7R 0603	C20	Taiyo Yuden	UMK107AB7105KA-T	Digi-Key	587-3247-1-ND	0.38	1	$ 0.38
CAP CER 0.1UF 50V 10% X7R 0603	C21	Kyocera AVX	06035C-104KAT2A	Digi-Key	478-5052-1-ND	0.23	1	$ 0.23
CAP CER 4.7UF 50V 10% X5R 0805	C22	Murata	GRT21BR61H475ME13L	Digi-Key	490-12395-1-ND	0.66	1	$ 0.66
CAP CER 0.1UF 50V 10% X7R 0603	C23	Kyocera AVX	06035C-104KAT2A	Digi-Key	478-5052-1-ND	0.23	1	$ 0.23
CAP CER 2.2UF 100V ±20% X7R 1206	C24	Murata	GRM31CR72A225MA73L	Digi-Key	490-12773-1-ND		1	
CAP CER 10uF 25V 10% X5R 0805	C25	Murata	GRM21BR61E106KA73L	Digi-Key	490-5523-1-ND	0.57	1	$ 0.57
CAP CER 0.1UF 50V 10% X7R 0603	C26	Kyocera AVX	06035C-104KAT2A	Digi-Key	478-5052-1-ND	0.23	1	$ 0.23
CAP CER 0.1UF 50V 10% X7R 0603	C27	Kyocera AVX	06035C-104KAT2A	Digi-Key	478-5052-1-ND	0.23	1	$ 0.23
DIODE TVS 15VWM 24.4VC DO-214AA (SMB)	D1	Taiwan Semiconductor	SMBJ15CA	Digi-Key	SMBJ15CAFSCT-ND	0.97	1	$ 0.97
DIODE TVS 24VWM 70VC SOT23	D2	Nexperia	PESD1CAN,215	Digi-Key	1727-3817-1-ND	0.65	1	$ 0.65
DIODE TVS 24VWM 70VC SOT23	D3	Nexperia	PESD1CAN,215	Digi-Key	1727-3817-1-ND	0.65	1	$ 0.65
DIODE ZENER 16V 5W DO-214AA (SMB)	D4	MCC	SMBJ5353B-TP	Digi-Key	SMBJ5353B-TPMSCT-ND	0.9	1	$ 0.90
DIODE GEN PURP 800V 8A SMC	D5	Diodes	S8KC-13	Digi-Key	S8KCDICT-ND	0.9	1	$ 0.90
DIODE ZENER 16V 5W DO-214AA (SMB)	D6	MCC	SMBJ5353B-TP	Digi-Key	SMBJ5353B-TPMSCT-ND	0.9	1	$ 0.90
DIODE ZENER 16V 5W DO-214AA (SMB)	D7	MCC	SMBJ5353B-TP	Digi-Key	SMBJ5353B-TPMSCT-ND	0.9	1	$ 0.90
DIODE ZENER 16V 5W DO-214AA (SMB)	D8	MCC	SMBJ5353B-TP	Digi-Key	SMBJ5353B-TPMSCT-ND	0.9	1	$ 0.90
DIODE SCHOTTKY 60V 3A SMA	D9	Diodes	B360A-13-F	Digi-Key	B360A-FDICT-ND	0.54	1	$ 0.54
DIODE TVS 154V 246V DO-2144A (SMB)	D10	Littelfuse	TPSMB180CA	Digi-Key	F10356CT-ND	1.11	1	$ 1.11
DIODE TVS 154V 246V DO-2144A (SMB)	D11	Littelfuse	TPSMB180CA	Digi-Key	F10356CT-ND	1.11	1	$ 1.11
FUSE 3A 250VAC/450VDC RADIAL	F1	Eaton	BK/PCC-3-R	Digi-Key	283-2768-ND	3.2	1	$ 3.20
FUSE 3A 250VAC/450VDC RADIAL	F2	Eaton	BK/PCC-3-R	Digi-Key	283-2768-ND	3.2	1	$ 3.20
IND 6.8uH 260mA 20% 1210	L1	TDK	NLFV32T-6R8M-EF	Digi-Key	445-15776-1-ND	0.58	1	$ 0.58
LED GREEN CLEAR 2V 0603	LED1	Wurth Electronics	150060VS75000	Digi-Key	732-4980-1-ND	0.19	1	$ 0.19
LED BLUE CLEAR 2.8V 0603	LED2	Vishay Lite-On	LTST-C193TBKT-5A	Digi-Key	160-1827-1-ND	0.62	1	$ 0.62
LED BLUE CLEAR 2.8V 0603	LED3	Vishay Lite-On	LTST-C193TBKT-5A	Digi-Key	160-1827-1-ND	0.62	1	$ 0.62
LED YELLOW CLEAR 2.1V 0603	LED4	Wurth Electronics	150060YS75000	Digi-Key	732-4981-1-ND	0.19	1	$ 0.19
HEATSINK ATO-247	M1	Wakefield	OMNI-UNI-30-50-D	Digi-Key	345-1574-ND	5.42	1	$ 5.42
FUSE HOLDER PC-TRON RADIAL	M2						1	
HEATSINK 2xTO-247_1	M!1	Wakefield	OMNI-UNI-30-25-D	Digi-Key	345-1573-ND	3.71	1	$ 3.71
CONN 2POS ULTRA-FIT 0.138"	P1	Molex	1722861302	Digi-Key	WM11673-ND	1.94	1	$ 1.94
CONN 50POS Bergstak Plug 0.02"	P2	Amphenol FCI	10132797-055100LF	Digi-Key	609-5226-1-ND		1	
CONN 4POS DURA-CLIK 0.079"	P3	Molex	560020-0420	Digi-Key	WM10864CT-ND	2.2	1	$ 2.20
CONN 3POS ULTRA-FIT 0.138"	P4	Molex	1722871103	Digi-Key	WM11702-ND	1.09	1	$ 1.09
CONN 4POS DURA-CLIK 0.079"	P5	Molex	560020-0420	Digi-Key	WM10864CT-ND	2.2	1	$ 2.20
CONN 4POS ULTRA-FIT 0.138"	P6	Molex	1722871104	Digi-Key	WM11703-ND	1.25	1	$ 1.25
MOSFET P-CH 500V 10A 300W TO-263	Q1	IXYS	IXTA10P50P	Digi-Key	IXTA10P50P-ND	6.87	1	$ 6.87
MOSFET P-CH 500V 10A 300W TO-263	Q2	IXYS	IXTA10P50P	Digi-Key	IXTA10P50P-ND	6.87	1	$ 6.87
MOSFET DEPLETION N-CH 500V 6A TO247	Q3	IXYS	IXTH6N50D2	Digi-Key	IXTH6N50D2-ND	8.35	1	$ 8.35
MOSFET N-CH 650V 8A X2 TO-263	Q4	IXYS	IXTA8N65X2	Digi-Key	IXTA8N65X2-ND	3.29	1	$ 3.29
MOSFET N-CH 60V 310MA SOT23	Q5	Diodes	DMN65D8L-7	Digi-Key	DMN65D8L-7DICT-ND		1	
MOSFET N-CH 30V 8.7A 2.1W 6-PQFN (2x2)	Q6	Infineon	IRLHS6342TRPBF	Digi-Key	IRLHS6342TRPBFCT-ND	0.89	1	$ 0.89
MOSFET N-CH 60V 310MA SOT23	Q7	Diodes	DMN65D8L-7	Digi-Key	DMN65D8L-7DICT-ND		1	
MOSFET P-CH 30V 4A 1.6W SOT-23-6	Q8	STMicroelectronics	STT4P3LLH6	Digi-Key	497-15521-1-ND	0.86	1	$ 0.86
MOSFET N-CH 60V 310MA SOT23	Q9	Diodes	DMN65D8L-7	Digi-Key	DMN65D8L-7DICT-ND		1	
MOSFET P-CH 60V 3A SOT223	Q10	Diodes	ZXMP6A17GQTA	Digi-Key	ZXMP6A17GQTADIDKR-ND	1.14	1	$ 1.14
RES 10K OHM 1% 1/10W 0603	R1	Yageo Phycomp	RC0603FR-0710KL	Digi-Key	311-10.0KHRCT-ND	0.13	1	$ 0.13
RES 10K OHM 1% 1/10W 0603	R2	Yageo Phycomp	RC0603FR-0710KL	Digi-Key	311-10.0KHRCT-ND	0.13	1	$ 0.13
RES 200 OHM 5% 2/3W 1206	R3	Panasonic	ERJ-P08J201V	Digi-Key	P200ALCT-ND	0.23	1	$ 0.23
RES 10K OHM 1% 1/10W 0603	R4	Yageo Phycomp	RC0603FR-0710KL	Digi-Key	311-10.0KHRCT-ND	0.13	1	$ 0.13
RES 10K OHM 1% 1/10W 0603	R5	Yageo Phycomp	RC0603FR-0710KL	Digi-Key	311-10.0KHRCT-ND	0.13	1	$ 0.13
RES 18 OHM 100W 5% TO-247	R6	Ohmite	AP10118RJ	Digi-Key	AP101 18R J-ND		1	
RES 18 OHM 100W 5% TO-247	R7	Ohmite	AP10118RJ	Digi-Key	AP101 18R J-ND		1	
RES 18 OHM 100W 5% TO-247	R8	Ohmite	AP10118RJ	Digi-Key	AP101 18R J-ND		1	
RES 18 OHM 100W 5% TO-247	R9	Ohmite	AP10118RJ	Digi-Key	AP101 18R J-ND		1	
RES 330 OHM 100W 5% TO-247	R10	Ohmite	AP101330RJ	Digi-Key	AP101 330R J-ND		1	
RES SMD 470K OHM 0.1% 1/4W 1206	R11	Susumu	RG3216P-4703-B-T1	Digi-Key	RG32P470KBDKR-ND	0.88	1	$ 0.88
RES SMD 470K OHM 0.1% 1/4W 1206	R12	Susumu	RG3216P-4703-B-T1	Digi-Key	RG32P470KBDKR-ND	0.88	1	$ 0.88
RES SMD 29.4K OHM 1% 1/4W 1206	R13	Panasonic	ERJ-8ENF2942V	Digi-Key	P29.4KFCT-ND	0.15	1	$ 0.15
RES 330 OHM 100W 5% TO-247	R14	Ohmite	AP101330RJ	Digi-Key	AP101 330R J-ND		1	
RES SMD 470K OHM 0.1% 1/4W 1206	R15	Susumu	RG3216P-4703-B-T1	Digi-Key	RG32P470KBDKR-ND	0.88	1	$ 0.88
RES 10K OHM 1% 1/10W 0603	R16	Yageo Phycomp	RC0603FR-0710KL	Digi-Key	311-10.0KHRCT-ND	0.13	1	$ 0.13
RES SMD 29.4K OHM 1% 1/4W 1206	R17	Panasonic	ERJ-8ENF2942V	Digi-Key	P29.4KFCT-ND	0.15	1	$ 0.15
RES SMD 33K OHM 0.1% 1/4W 1206	R18	Yageo	RT1206BRD0733KL	Digi-Key	YAG2038CT-ND	0.82	1	$ 0.82
RES 40.2 OHM 0.5% 1/10W 0603	R19	Yageo	RT0603DRE0740R2L	Digi-Key	311-2576-1-ND	0.16	1	$ 0.16
RES 22.1 OHM 1% 1/10W 0603	R20	Yageo	RC0603FR-0722R1L	Digi-Key	311-22.1HRCT-ND	0.13	1	$ 0.13
RES 10K OHM 1% 1/10W 0603	R21	Yageo Phycomp	RC0603FR-0710KL	Digi-Key	311-10.0KHRCT-ND	0.13	1	$ 0.13
RES SMD 0 OHM JUMPER 1/4W 1206	R22	Vishay	CRCW12060000Z0EA	Digi-Key	541-0.0ECT-ND	0.13	1	$ 0.13
RES SMD 2K OHM 0.1% 1/4W 1206	R23	Panasonic	ERA8AEB202V	Digi-Key	P2.0KBCCT-ND	0.88	1	$ 0.88
RES 10K OHM 1% 1/10W 0603	R24	Yageo Phycomp	RC0603FR-0710KL	Digi-Key	311-10.0KHRCT-ND	0.13	1	$ 0.13
RES 22.1 OHM 1% 1/10W 0603	R25	Yageo	RC0603FR-0722R1L	Digi-Key	311-22.1HRCT-ND	0.13	1	$ 0.13
RES 1M OHM 1% 1/10W 0603	R26	Yageo	RC0603FR-071ML	Digi-Key	311-1.00MHRCT-ND	0.13	1	$ 0.13
RES 10K OHM 1% 1/10W 0603	R27	Yageo Phycomp	RC0603FR-0710KL	Digi-Key	311-10.0KHRCT-ND	0.13	1	$ 0.13
RES 1K OHM 5% 1/10W 0603	R28	Yageo	RC0603JR-071KL	Digi-Key	311-1.0KGRCT-ND	0.13	1	$ 0.13
RES 10K OHM 1% 1/10W 0603	R29	Yageo Phycomp	RC0603FR-0710KL	Digi-Key	311-10.0KHRCT-ND	0.13	1	$ 0.13
RES 10K OHM 1% 1/10W 0603	R30	Yageo Phycomp	RC0603FR-0710KL	Digi-Key	311-10.0KHRCT-ND	0.13	1	$ 0.13
RES 10K OHM 1% 1/10W 0603	R31	Yageo Phycomp	RC0603FR-0710KL	Digi-Key	311-10.0KHRCT-ND	0.13	1	$ 0.13
RES 10K OHM 1% 1/10W 0603	R32	Yageo Phycomp	RC0603FR-0710KL	Digi-Key	311-10.0KHRCT-ND	0.13	1	$ 0.13
RES 10K OHM 1% 1/10W 0603	R33	Yageo Phycomp	RC0603FR-0710KL	Digi-Key	311-10.0KHRCT-ND	0.13	1	$ 0.13
RES 10K OHM 1% 1/10W 0603	R34	Yageo Phycomp	RC0603FR-0710KL	Digi-Key	311-10.0KHRCT-ND	0.13	1	$ 0.13
RES 10K OHM 1% 1/10W 0603	R35	Yageo Phycomp	RC0603FR-0710KL	Digi-Key	311-10.0KHRCT-ND	0.13	1	$ 0.13
RES 1K OHM 5% 1/10W 0603	R36	Yageo	RC0603JR-071KL	Digi-Key	311-1.0KGRCT-ND	0.13	1	$ 0.13
Test Point	TP1						1	
IC CAN SPI CONTROLLER MCP2515T-I/ST 20-TSSOP	U1	Microchip	MCP2515T-I/ST	Digi-Key	MCP2515T-I/STCT-ND	2.72	1	$ 2.72
IC CAN Tranceiver TCAN332DR	U2	Texas Instruments	TCAN332DR	Digi-Key	296-43711-1-ND	2.74	1	$ 2.74
IC LOAD SWITCH ACT-HI 10.5A 8DFN	U3	ON Semiconductor	NCP45521IMNTWG-H	Digi-Key	NCP45521IMNTWG-HOSDKR-ND	1.15	1	$ 1.15
IC REG SWTCHD CAP INV 20MA 8SOIC	U4	Microchip	TC7662BEOA713	Digi-Key	TC7662BEOA713CT-ND	3.04	1	$ 3.04
IC OPTOISOLATOR 3.75KV PUSH PULL 8-SOIC	U5	Broadcom Avago	HCPL-0211-000E	Digi-Key	516-1625-5-ND		1	
IC SR LATCH 4CH 16SOIC	U6	Texas Instruments	CD4043BDR	Digi-Key	296-31496-1-ND	0.64	1	$ 0.64
IC COMPARATOR TLV1701 SOT-23-5	U7	Texas Instruments	TLV1701QD6VRO1	Digi-Key	296-47458-1-ND	1.78	1	$ 1.78
IC AND GATE 1CH 5-SSOP	U8	Rohm	BU4S81G2-TR	Digi-Key	BU4S81G2CT-ND	1.23	1	$ 1.23
IC DCDC ISOLATED 12V 1W 8-SMD 5-LEAD	U9	XP Power	ISE1212A	Digi-Key	1470-2950-1-ND	5.64	1	$ 5.64
CRYSTAL 16 MHz 18PF 2-SMD	Y1	Abracon	ABM3-16.000MHZ-D2Y-T	Digi-Key	535-10638-1-ND	0.91	1	$ 0.91
							Total:	$ 100.40

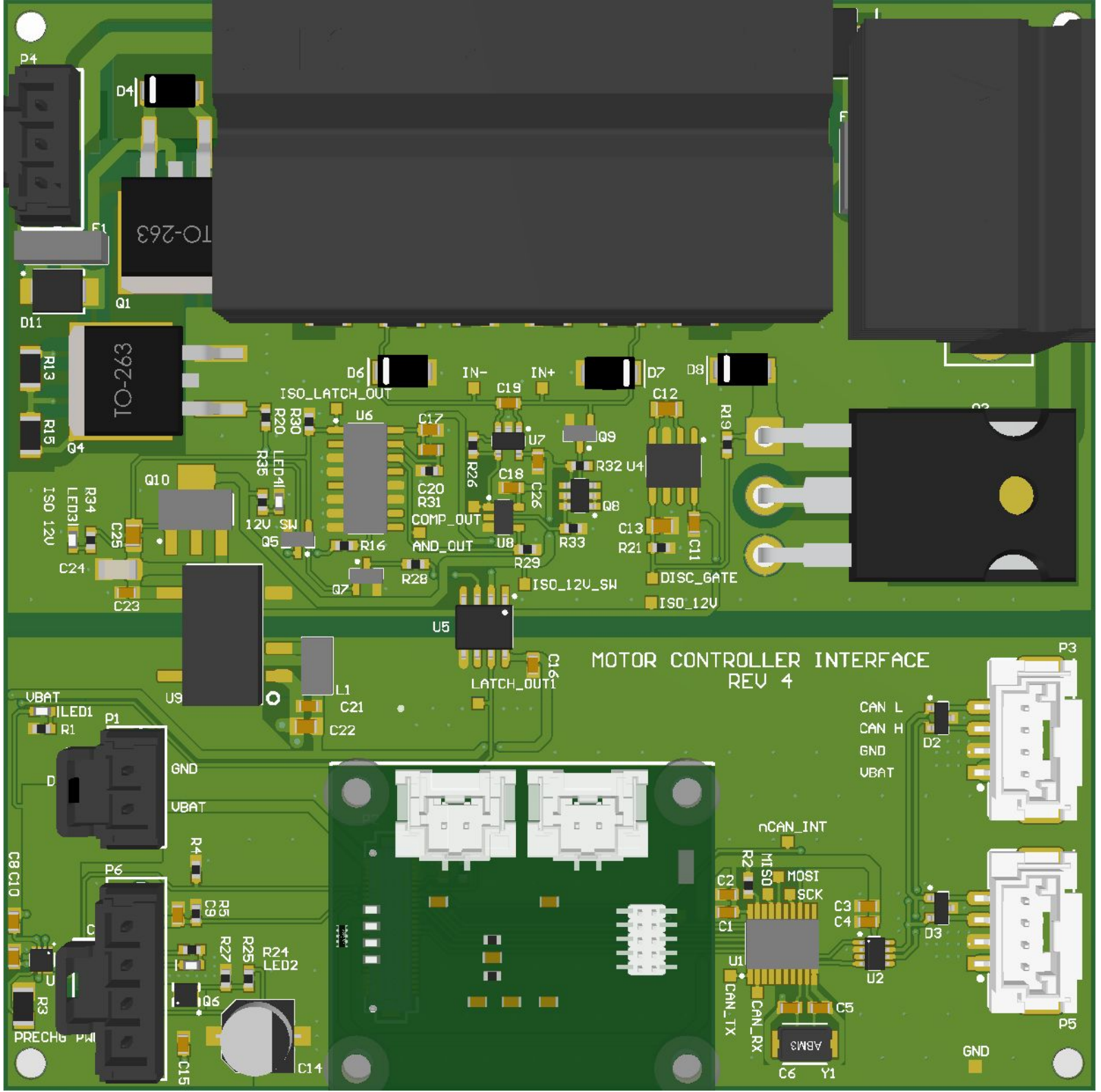
MOTOR CONTROLLER INTERFACE
REV 4
TO-263
TO-263
ISO_LATCH_OUT
IN-
IN+
COMP_OUT
AND_OUT
12V_SW
ISO_12V_SW
DISC_GATE
ISO_12V
LATCH_OUT1
CAN L
CAN H
GND
VBAT
nCAN_INT
MISO
MOSI
SCK
CAN_TX
CAN_RX
PRECHG
GND
VBAT
P1
P3
P4
P5
P6
Q1
Q4
Q5
Q6
Q7
Q8
Q9
Q10
U1
U2
U4
U5
U6
U7
U8
U9
D2
D3
D4
D6
D7
D8
D11
L1
C14
C15
C16
C17
C18
C19
C20
C21
C22
C23
C24
C25
C26
C1
C2
C3
C4
C5
C6
C8
C9
C10
C11
C12
C13
R1
R2
R3
R4
R5
R13
R15
R16
R19
R20
R21
R24
R25
R26
R27
R28
R29
R30
R31
R32
R33
R34
R35
LED1
LED2
LED3
LED4
ISO 12V
Y1

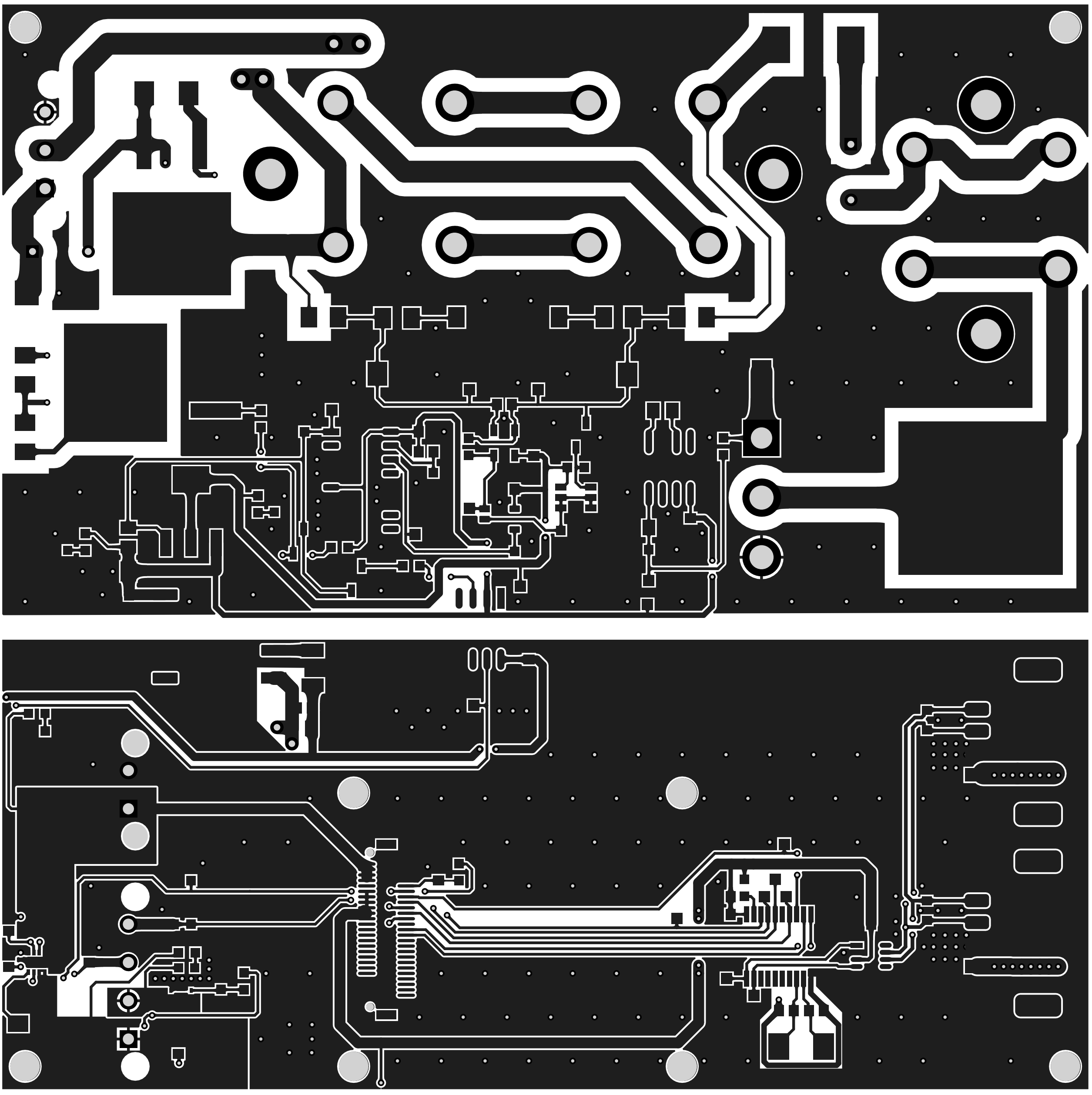

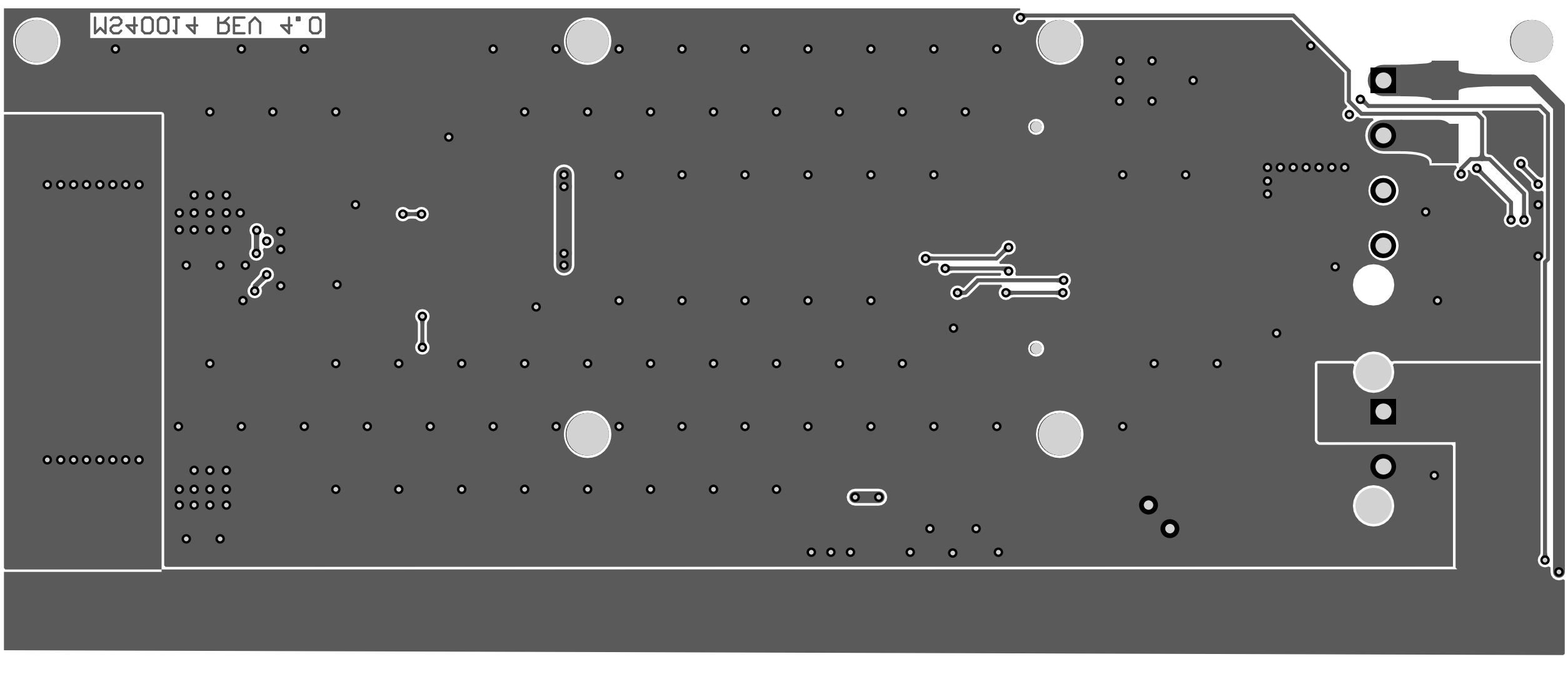
M24001A REV A.0

Electrical Rules Check Report

Class	Document	Message
Warning	Motor Interface - Pre-Charge Interface.SchDoc	3V3 contains Output Port and Unspecified Port objects (Port 3V3,Port CONTACTOR_SENSE_OUT)
Warning	Motor Interface - Pre-Charge Interface.SchDoc	Nets Wire 3V3 has multiple names (Power Object 3V3,Power Object 3V3,Power Object 3V3,Port 3V3,Port CONTACTOR_SENSE_OUT)
Warning	Motor Interface - Top Sheet.SchDoc	Nets Wire 3V3 has multiple names (Power Object 3V3,Power Object 3V3,Power Object 3V3,Power Object 3V3,Power Object 3V3,Power Object 3V3,Power Object 3V3,Power Object 3V3,Power Object 3V3,Power Object 3V3,Power Object 3V3,Sheet Entry U_Motor Interface - CAN-3V3(Passive),Sheet Entry U_Motor Interface - Connectors-3V3(Passive),Sheet Entry U_Motor Interface - Connectors-CONTACTOR_SENSE_OUT(Input),Sheet Entry U_Motor Interface - Pre-Charge Interface-3V3(Passive),Sheet Entry U_Motor Interface - Pre-Charge Interface-CONTACTOR_SENSE_OUT(Output),Port 3V3,Port 3V3,Port 3V3,Port CONTACTOR_SENSE_OUT,Port CONTACTOR_SENSE_OUT)
Warning	Motor Interface - Pre-Charge HV.SchDoc	Off grid at 1800.611mil,7392.532mil
Warning	Motor Interface - Pre-Charge HV.SchDoc	Off grid at 6303.039mil,8262.396mil
Warning	Motor Interface - Pre-Charge HV.SchDoc	Off grid at 12010.97mil,8056.662mil

Design Rules Verification Report

Filename : C:\Users\Taiping\Documents\MidnightSun\hardware\MSXII_PreChargeControlle

Warnings 0
Rule Violations 104

Warnings	
Total	0

Rule Violations	
Clearance Constraint (Gap=0.152mm) (All),(All)	0
Clearance Constraint (Gap=1.25mm) (InNetClass('HV') and Not (InNet('IN+') or InNet('IN-'))),(InNet('*'))	0
Short-Circuit Constraint (Allowed=No) (All),(All)	0
Un-Routed Net Constraint ((All))	0
Modified Polygon (Allow modified: No), (Allow shelved: No)	0
Width Constraint (Min=0.152mm) (Max=10mm) (Preferred=0.254mm) (All)	0
Power Plane Connect Rule(Relief Connect)(Expansion=0.508mm) (Conductor Width=0.254mm) (Air Gap=0.254mm)	0
Minimum Annular Ring (Minimum=0.05mm) (All)	0
Hole Size Constraint (Min=0.3mm) (Max=6.3mm) (All)	0
Hole To Hole Clearance (Gap=0.254mm) (All),(All)	0
Minimum Solder Mask Sliver (Gap=0mm) (All),(All)	0
Silk To Solder Mask (Clearance=0.178mm) (IsPad),(All)	65
Silk to Silk (Clearance=0.254mm) (All),(All)	37
Net Antennae (Tolerance=0mm) (All)	0
Board Clearance Constraint (Gap=0mm) (All)	2
Height Constraint (Min=0mm) (Max=200mm) (Prefered=12.7mm) (All)	0
Total	104

Silk To Solder Mask (Clearance=0.178mm) (IsPad),(All)
Silk To Solder Mask Clearance Constraint: (Collision < 0.178mm) Between Arc (30.841mm,77.6mm) on Top Overlay And Pad R6-1(30.841mm,77.6mm) on
Silk To Solder Mask Clearance Constraint: (Collision < 0.178mm) Between Arc (30.841mm,90.6mm) on Top Overlay And Pad R8-1(30.841mm,90.6mm) on
Silk To Solder Mask Clearance Constraint: (Collision < 0.178mm) Between Arc (41.721mm,77.6mm) on Top Overlay And Pad R6-2(41.721mm,77.6mm) on
Silk To Solder Mask Clearance Constraint: (Collision < 0.178mm) Between Arc (41.721mm,90.6mm) on Top Overlay And Pad R8-2(41.721mm,90.6mm) on
Silk To Solder Mask Clearance Constraint: (Collision < 0.178mm) Between Arc (53.961mm,77.6mm) on Top Overlay And Pad R7-1(54mm,77.6mm) on
Silk To Solder Mask Clearance Constraint: (Collision < 0.178mm) Between Arc (53.961mm,90.6mm) on Top Overlay And Pad R9-1(53.941mm,90.6mm) on
Silk To Solder Mask Clearance Constraint: (Collision < 0.178mm) Between Arc (64.841mm,77.6mm) on Top Overlay And Pad R7-2(64.88mm,77.6mm) on
Silk To Solder Mask Clearance Constraint: (Collision < 0.178mm) Between Arc (64.841mm,90.6mm) on Top Overlay And Pad R9-2(64.821mm,90.6mm) on
Silk To Solder Mask Clearance Constraint: (Collision < 0.178mm) Between Arc (83.741mm,75.43mm) on Top Overlay And Pad R10-2(83.7mm,75.42mm)
Silk To Solder Mask Clearance Constraint: (Collision < 0.178mm) Between Arc (83.741mm,86.31mm) on Top Overlay And Pad R10-1(83.7mm,86.3mm) on
Silk To Solder Mask Clearance Constraint: (Collision < 0.178mm) Between Arc (96.741mm,75.46mm) on Top Overlay And Pad R14-2(96.8mm,75.42mm)
Silk To Solder Mask Clearance Constraint: (Collision < 0.178mm) Between Arc (96.741mm,86.34mm) on Top Overlay And Pad R14-1(96.8mm,86.3mm) on
Silk To Solder Mask Clearance Constraint: (Collision < 0.178mm) Between Pad C1-2(65.557mm,16.374mm) on Top Layer And Track
Silk To Solder Mask Clearance Constraint: (0.134mm < 0.178mm) Between Pad C16-2(48.5mm,38.355mm) on Top Layer And Text "LATCH_OUT1"
Silk To Solder Mask Clearance Constraint: (0.077mm < 0.178mm) Between Pad C17-1(39.779mm,60.525mm) on Top Layer And Text "C17"
Silk To Solder Mask Clearance Constraint: (0.077mm < 0.178mm) Between Pad C17-2(38.429mm,60.525mm) on Top Layer And Text "C17"
Silk To Solder Mask Clearance Constraint: (Collision < 0.178mm) Between Pad C2-2(65.575mm,18mm) on Top Layer And Track
Silk To Solder Mask Clearance Constraint: (Collision < 0.178mm) Between Pad C7-2(8.333mm,13.35mm) on Top Layer And Track
Silk To Solder Mask Clearance Constraint: (0.175mm < 0.178mm) Between Pad COMP_OUT-TP(43.08mm,53.5mm) on Top Layer And Text "COMP_OUT"
Silk To Solder Mask Clearance Constraint: (0.166mm < 0.178mm) Between Pad D9-1(8mm,9mm) on Bottom Layer And Track
Silk To Solder Mask Clearance Constraint: (0.166mm < 0.178mm) Between Pad D9-1(8mm,9mm) on Bottom Layer And Track
Silk To Solder Mask Clearance Constraint: (0.166mm < 0.178mm) Between Pad D9-2(8mm,5mm) on Bottom Layer And Track
Silk To Solder Mask Clearance Constraint: (0.166mm < 0.178mm) Between Pad D9-2(8mm,5mm) on Bottom Layer And Track
Silk To Solder Mask Clearance Constraint: (0.115mm < 0.178mm) Between Pad MOSI-TP(70.989mm,19.609mm) on Top Layer And Text "MISO"
Silk To Solder Mask Clearance Constraint: (0.119mm < 0.178mm) Between Pad P3-7(95mm,25.55mm) on Top Layer And Track
Silk To Solder Mask Clearance Constraint: (0.16mm < 0.178mm) Between Pad P3-7(95mm,38.75mm) on Top Layer And Track
Silk To Solder Mask Clearance Constraint: (0.16mm < 0.178mm) Between Pad P5-7(95mm,21.25mm) on Top Layer And Track
Silk To Solder Mask Clearance Constraint: (0.119mm < 0.178mm) Between Pad P5-7(95mm,8.05mm) on Top Layer And Track
Silk To Solder Mask Clearance Constraint: (Collision < 0.178mm) Between Pad Q5-2(26.025mm,51.635mm) on Top Layer And Text "12V SW"
Silk To Solder Mask Clearance Constraint: (0.05mm < 0.178mm) Between Pad Q6-1(17.656mm,8.15mm) on Top Layer And Track
Silk To Solder Mask Clearance Constraint: (0.112mm < 0.178mm) Between Pad Q6-2(17.656mm,8.8mm) on Top Layer And Track
Silk To Solder Mask Clearance Constraint: (0.112mm < 0.178mm) Between Pad Q6-2(17.656mm,8.8mm) on Top Layer And Track
Silk To Solder Mask Clearance Constraint: (0.05mm < 0.178mm) Between Pad Q6-3(17.656mm,9.45mm) on Top Layer And Track
Silk To Solder Mask Clearance Constraint: (0.05mm < 0.178mm) Between Pad Q6-4(15.806mm,9.45mm) on Top Layer And Track
Silk To Solder Mask Clearance Constraint: (0.112mm < 0.178mm) Between Pad Q6-5(15.806mm,8.8mm) on Top Layer And Track
Silk To Solder Mask Clearance Constraint: (0.112mm < 0.178mm) Between Pad Q6-5(15.806mm,8.8mm) on Top Layer And Track
Silk To Solder Mask Clearance Constraint: (0.05mm < 0.178mm) Between Pad Q6-6(15.806mm,8.15mm) on Top Layer And Track
Silk To Solder Mask Clearance Constraint: (0.067mm < 0.178mm) Between Pad R29-2(47.2mm,49.575mm) on Top Layer And Text "U8" (45.3mm,49.8mm)
Silk To Solder Mask Clearance Constraint: (0.175mm < 0.178mm) Between Pad U2-1(78.425mm,13.575mm) on Top Layer And Track
Silk To Solder Mask Clearance Constraint: (0.177mm < 0.178mm) Between Pad U2-2(78.425mm,12.925mm) on Top Layer And Track
Silk To Solder Mask Clearance Constraint: (0.177mm < 0.178mm) Between Pad U2-3(78.425mm,12.275mm) on Top Layer And Track
Silk To Solder Mask Clearance Constraint: (0.177mm < 0.178mm) Between Pad U2-4(78.425mm,11.625mm) on Top Layer And Track
Silk To Solder Mask Clearance Constraint: (0.175mm < 0.178mm) Between Pad U2-5(81.075mm,11.625mm) on Top Layer And Track
Silk To Solder Mask Clearance Constraint: (0.175mm < 0.178mm) Between Pad U2-6(81.075mm,12.275mm) on Top Layer And Track
Silk To Solder Mask Clearance Constraint: (0.175mm < 0.178mm) Between Pad U2-7(81.075mm,12.925mm) on Top Layer And Track
Silk To Solder Mask Clearance Constraint: (0.175mm < 0.178mm) Between Pad U2-8(81.075mm,13.575mm) on Top Layer And Track
Silk To Solder Mask Clearance Constraint: (0.162mm < 0.178mm) Between Pad U3-1(4.3mm,12.9mm) on Top Layer And Track
Silk To Solder Mask Clearance Constraint: (0.139mm < 0.178mm) Between Pad U3-4(2.8mm,12.9mm) on Top Layer And Track
Silk To Solder Mask Clearance Constraint: (0.131mm < 0.178mm) Between Pad U3-5(2.8mm,11.1mm) on Top Layer And Track
Silk To Solder Mask Clearance Constraint: (0.155mm < 0.178mm) Between Pad U3-8(4.05mm,11.25mm) on Top Layer And Track
Silk To Solder Mask Clearance Constraint: (0.155mm < 0.178mm) Between Pad U3-8(4.3mm,11.1mm) on Top Layer And Track
Silk To Solder Mask Clearance Constraint: (0.175mm < 0.178mm) Between Pad U3-9(3.55mm,12mm) on Top Layer And Track

Silk To Solder Mask (Clearance=0.178mm) (IsPad),(All)
Silk To Solder Mask Clearance Constraint: (Collision < 0.178mm) Between Pad U5-1(45.939mm,45.295mm) on Top Layer And Track
Silk To Solder Mask Clearance Constraint: (Collision < 0.178mm) Between Pad U5-2(44.669mm,45.295mm) on Top Layer And Track
Silk To Solder Mask Clearance Constraint: (Collision < 0.178mm) Between Pad U5-3(43.399mm,45.295mm) on Top Layer And Track
Silk To Solder Mask Clearance Constraint: (Collision < 0.178mm) Between Pad U5-4(42.129mm,45.295mm) on Top Layer And Track
Silk To Solder Mask Clearance Constraint: (0mm < 0.178mm) Between Pad U5-5(42.129mm,39.705mm) on Top Layer And Track
Silk To Solder Mask Clearance Constraint: (0mm < 0.178mm) Between Pad U5-6(43.399mm,39.705mm) on Top Layer And Track
Silk To Solder Mask Clearance Constraint: (0mm < 0.178mm) Between Pad U5-7(44.669mm,39.705mm) on Top Layer And Track
Silk To Solder Mask Clearance Constraint: (0mm < 0.178mm) Between Pad U5-8(45.939mm,39.705mm) on Top Layer And Track
Silk To Solder Mask Clearance Constraint: (0.125mm < 0.178mm) Between Pad U7-1(47.2mm,60.65mm) on Top Layer And Track
Silk To Solder Mask Clearance Constraint: (0.125mm < 0.178mm) Between Pad U7-2(46.25mm,60.65mm) on Top Layer And Track
Silk To Solder Mask Clearance Constraint: (0.125mm < 0.178mm) Between Pad U7-3(45.3mm,60.65mm) on Top Layer And Track
Silk To Solder Mask Clearance Constraint: (0.125mm < 0.178mm) Between Pad U7-4(45.3mm,58.35mm) on Top Layer And Track
Silk To Solder Mask Clearance Constraint: (0.125mm < 0.178mm) Between Pad U7-5(47.2mm,58.35mm) on Top Layer And Track

Silk to Silk (Clearance=0.254mm) (All),(All)
Silk To Silk Clearance Constraint: (0.075mm < 0.254mm) Between Text "C16" (49.984mm,39.905mm) on Top Overlay And Text "LATCH_OUT1"
Silk To Silk Clearance Constraint: (0.221mm < 0.254mm) Between Text "C7" (7.749mm,14.382mm) on Top Overlay And Track
Silk To Silk Clearance Constraint: (0.225mm < 0.254mm) Between Text "D11" (1.667mm,70mm) on Top Overlay And Track
Silk To Silk Clearance Constraint: (0.227mm < 0.254mm) Between Text "D2" (84.366mm,31.5mm) on Top Overlay And Track
Silk To Silk Clearance Constraint: (0.126mm < 0.254mm) Between Text "D4" (10.5mm,91.193mm) on Top Overlay And Track
Silk To Silk Clearance Constraint: (0.221mm < 0.254mm) Between Text "D7" (59.124mm,65.4mm) on Top Overlay And Track
Silk To Silk Clearance Constraint: (0.237mm < 0.254mm) Between Text "D8" (62.696mm,65.687mm) on Top Overlay And Track
Silk To Silk Clearance Constraint: (0.192mm < 0.254mm) Between Text "F1" (8.261mm,78.6mm) on Top Overlay And Track
Silk To Silk Clearance Constraint: (0.241mm < 0.254mm) Between Text "F1" (8.261mm,78.6mm) on Top Overlay And Track
Silk To Silk Clearance Constraint: (0.144mm < 0.254mm) Between Text "ISO_LATCH_OUT" (25.475mm,63.5mm) on Top Overlay And Track
Silk To Silk Clearance Constraint: (0.238mm < 0.254mm) Between Text "L1" (30.57mm,36.327mm) on Top Overlay And Track
Silk To Silk Clearance Constraint: (0.238mm < 0.254mm) Between Text "L1" (30.57mm,36.327mm) on Top Overlay And Track
Silk To Silk Clearance Constraint: (0.245mm < 0.254mm) Between Text "LED1" (5.4mm,34.355mm) on Top Overlay And Track
Silk To Silk Clearance Constraint: (0.251mm < 0.254mm) Between Text "LED2" (23.951mm,11.099mm) on Top Overlay And Text "R24" (23.9mm,12.3mm)
Silk To Silk Clearance Constraint: (0.211mm < 0.254mm) Between Text "LED3" (5.93mm,55.177mm) on Top Overlay And Track
Silk To Silk Clearance Constraint: (0.095mm < 0.254mm) Between Text "LED4" (24.8mm,58.547mm) on Top Overlay And Track
Silk To Silk Clearance Constraint: (0.077mm < 0.254mm) Between Text "M!1" (93mm,93.739mm) on Top Overlay And Track
Silk To Silk Clearance Constraint: (0.077mm < 0.254mm) Between Text "M!1" (93mm,93.739mm) on Top Overlay And Track
Silk To Silk Clearance Constraint: (0.136mm < 0.254mm) Between Text "P1" (9.45mm,33.7mm) on Top Overlay And Track
Silk To Silk Clearance Constraint: (0.117mm < 0.254mm) Between Text "P1" (9.45mm,33.7mm) on Top Overlay And Track
Silk To Silk Clearance Constraint: (0.177mm < 0.254mm) Between Text "P6" (9.45mm,19.875mm) on Top Overlay And Track
Silk To Silk Clearance Constraint: (0.173mm < 0.254mm) Between Text "P6" (9.45mm,19.875mm) on Top Overlay And Track
Silk To Silk Clearance Constraint: (0.217mm < 0.254mm) Between Text "Q5" (23.75mm,49.9mm) on Top Overlay And Track
Silk To Silk Clearance Constraint: (0.25mm < 0.254mm) Between Text "Q6" (18.356mm,7.8mm) on Top Overlay And Track
Silk To Silk Clearance Constraint: (0.169mm < 0.254mm) Between Text "Q9" (54.6mm,59.525mm) on Top Overlay And Track
Silk To Silk Clearance Constraint: (0.14mm < 0.254mm) Between Text "Q9" (54.6mm,59.525mm) on Top Overlay And Track
Silk To Silk Clearance Constraint: (Collision < 0.254mm) Between Text "R14" (94.191mm,89.323mm) on Top Overlay And Track
Silk To Silk Clearance Constraint: (0.22mm < 0.254mm) Between Text "U1" (66.566mm,11.5mm) on Top Overlay And Track
Silk To Silk Clearance Constraint: (0.22mm < 0.254mm) Between Text "U1" (66.566mm,11.5mm) on Top Overlay And Track
Silk To Silk Clearance Constraint: (0.232mm < 0.254mm) Between Text "U2" (79.177mm,9.9mm) on Top Overlay And Track
Silk To Silk Clearance Constraint: (0.225mm < 0.254mm) Between Text "U2" (79.177mm,9.9mm) on Top Overlay And Track
Silk To Silk Clearance Constraint: (0.225mm < 0.254mm) Between Text "U2" (79.177mm,9.9mm) on Top Overlay And Track
Silk To Silk Clearance Constraint: (0.147mm < 0.254mm) Between Text "U4" (57.2mm,56.82mm) on Top Overlay And Track
Silk To Silk Clearance Constraint: (0.245mm < 0.254mm) Between Text "U6" (32.398mm,61.5mm) on Top Overlay And Track
Silk To Silk Clearance Constraint: (0.206mm < 0.254mm) Between Text "U8" (45.3mm,49.8mm) on Top Overlay And Track
Silk To Silk Clearance Constraint: (0.205mm < 0.254mm) Between Text "U8" (45.3mm,49.8mm) on Top Overlay And Track
Silk To Silk Clearance Constraint: (0.205mm < 0.254mm) Between Text "U8" (45.3mm,49.8mm) on Top Overlay And Track

Board Clearance Constraint (Gap=0mm) (All)
Board Outline Clearance(Outline Edge): (Collision < 0.406mm) Between Board Edge And Track (30mm,0mm)(30mm,30mm) on Top Overlay
Board Outline Clearance(Outline Edge): (Collision < 0.406mm) Between Board Edge And Track (65mm,0mm)(65mm,30mm) on Top Overlay