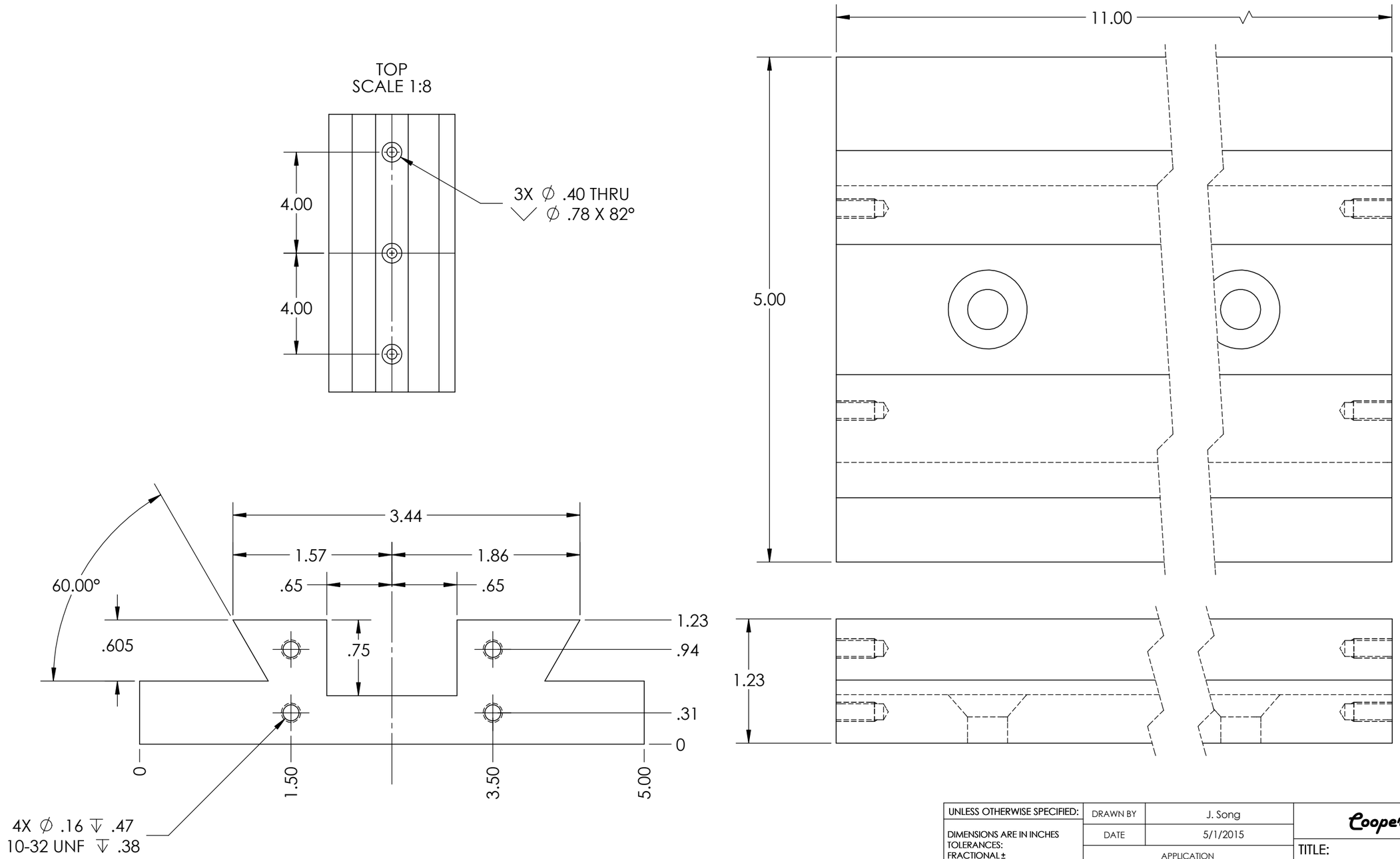

UNLESS OTHERWISE SPECIFIED:	DRAWN BY	J. Song	Cooper Machine Co.
DIMENSIONS ARE IN INCHES TOLERANCES: FRACTIONAL ± ANGULAR: MACH ± BEND ± TWO PLACE DECIMAL ± THREE PLACE DECIMAL ±	DATE	5/1/2015	TITLE: Bottom Dovetail
	APPLICATION		
	NEXT ASSY	Lower Dovetail Stage	
INTERPRET GEOMETRIC TOLERANCING PER:			
MATERIAL Ductile Iron	SUBSYSTEM	Fixturing	SIZE A / FILE NAME dovetail-bottom / REV 4.1
FINISH	COMMENTS: mounts to machine bed		
DO NOT SCALE DRAWING			SCALE: 1:1 / WEIGHT: 11.27 / SHEET 1 OF 1

SolidWorks Educational License
Instructional Use Only