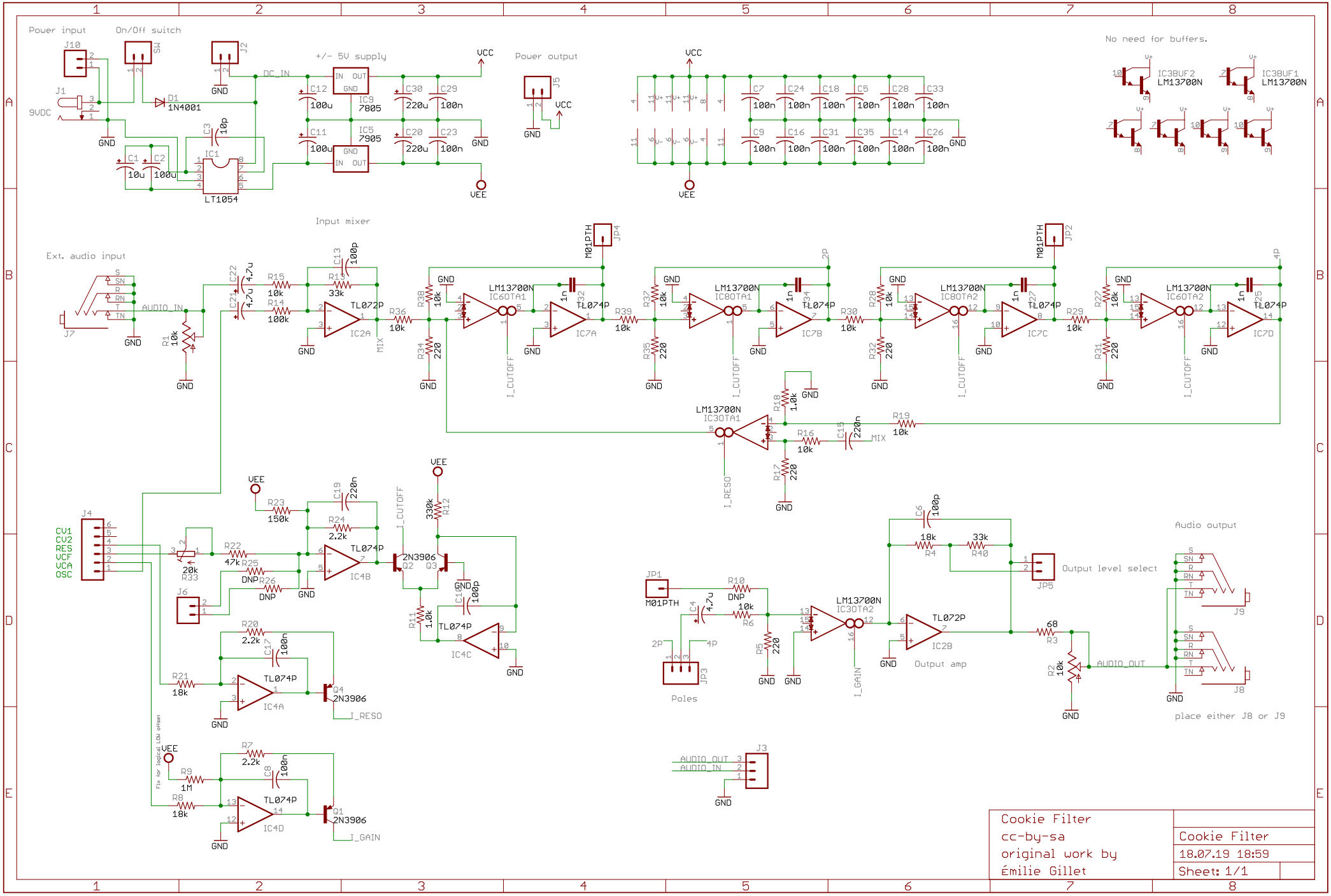

Cookie Filter	
cc-by-sa	Cookie Filter
original work by	18.07.19 18:59
Émilie Gillet	Sheet: 1/1