# Visual Question Answering on VizWiz

## A Generative CLIP + LSTM Approach with Selective Fine-tuning

Kim Đình Sơn  Mai Hà Đạt  Nguyễn Tùng Lương  Ninh Văn Nghĩa
Phạm Thanh Nam  Phạm Nguyên Khánh Minh

Advanced Deep Learning
Master of Data Science Program

Mar 22, 2026

# Table of Contents


1. Executive Summary
2. Introduction
3. Methodology
4. Results
5. Conclusion

# Executive Summary

## Problem

- VQA on real-world images taken by blind users
- Blurry, rotated, poorly-lit photos
- $\approx 25\%$ questions are unanswerable

## Approach

- **Generative** decoder (LSTM)
- **Dual CLIP encoder** (ViT-B/32, frozen)
- **Ablation** across 0, 2, 3 unfrozen ViT layers

## Key Contributions

1. Generative VQA pipeline for VizWiz
2. Layer-wise LR ($\times 0.1$) for CLIP fine-tuning
3. **VQA Accuracy** as official metric (vs. SQuAD EM/F1)

## Best Result — Frozen Baseline

VQA Accuracy: **0.567**

BLEU-1: **0.482** F1: **48.77**

Frozen CLIP > selective unfreezing

# Motivation: Assistive AI for the Visually Impaired

**About VizWiz**

- 20,000+ photos taken by blind smartphone users
- Questions asked in natural speech, often ambiguous
- Harder than VQA v2 (Antol et al., 2015):

| **Challenge** | VQA v2 | **VizWiz** |
|---|---|---|
| Image quality | High | Low |
| Unanswerable | None | 27% |
| Question clarity | Clear | Ambiguous |

**VizWiz VQA Challenge 2024**

*Q: "What brand is this?"*
*A: "unanswerable"* (blurry image)

*Q: "What color is my shirt?"*
*A: "blue"*

*Q: "Is this expired?"*
*A: "no"*

# Dataset: VizWiz VQA

## Data Splits (99/1)

```
Loading datasets...
  [train] 18,470 samples. Source: train.json
  [val]    2,053 samples. Source: train.json
  [test]   4,319 samples. Source: val.json

```

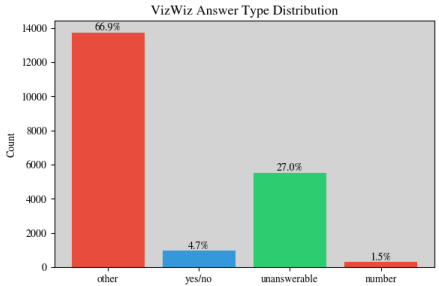


*Answer Type Distribution*

### Annotation Protocol

- **10 annotators** per image-question pair
- Majority vote for `yes/no` labels
- `unanswerable` if $> 3$ annotators agree
- Stored as `all_answers` for VQA Acc

### Key Challenge

Model must learn to **refuse** answering, not hallucinate, for $\approx 27\%$ of inputs.

# Problem Definition

## Our Task

$$f : (I,\ Q) \longrightarrow A$$

- $I \in \mathbb{R}^{3\times 224\times 224}$: input image
- $Q = (q_1, \ldots, q_T)$: question token sequence, $T \leq 77$
- $A = (a_1, \ldots, a_S)$: answer token sequence (generative output)

**Why Generative?**

- Classification over fixed vocab cannot handle *unanswerable*
- Predict the unknown question: VizWiz answers are open-ended and non-standardized
- Enables free-form responses

**Training Objective** Teacher forcing with cross-entropy:

$$\mathcal{L} = -\sum_{t=1}^{S} \log P(a_t \mid a_{<t},\ I,\ Q)$$

# OpenAI CLIP Model

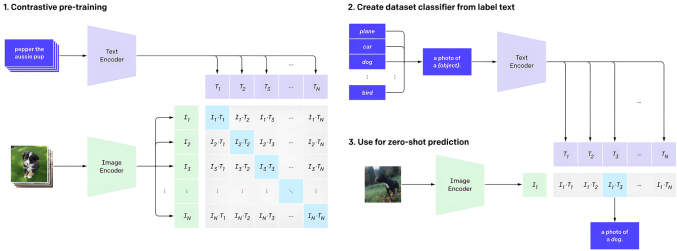


*Summary of CLIP model's approach, from Learning Transferable Visual Models From Natural Language Supervision paper*

## What is contrastive learning?

Imagine you have a main item (the "anchor sample"), a similar item ("positive"), and a different item ("negative sample"). The goal is to make the model understand that the anchor and the positive item are alike, so it brings them closer together in its mind while recognizing that the negative item is different and pushing it away.

# Evaluation Metric: VQA Accuracy

## Follow Official VizWiz

$$\text{VQA-Acc}(\hat{a}) = \min\left(\frac{\left|\{i : \hat{a} = a_i\}\right|}{3}, 1.0\right)$$

where $\{a_i\}_{i=1}^{10}$ are answers from 10 human annotators.

### Interpretation - Fair-play score

- $\geq 3$ annotators agree with $\hat{a} \Rightarrow$ score $= 1.0$
- 2 annotators agree $\Rightarrow$ score $= 0.67$
- 1 annotator agrees $\Rightarrow$ score $= 0.33$
- 0 agree $\Rightarrow$ score $= 0$

### Why Not SQuAD EM/F1?

- SQuAD designed for extractive QA
- Cannot capture synonym answers ("white" vs. "cream" vs. "off-white")
- EM too strict for generative outputs

Additional metric: BLEU-1 for n-gram overlap evaluation.

# Architecture Overview

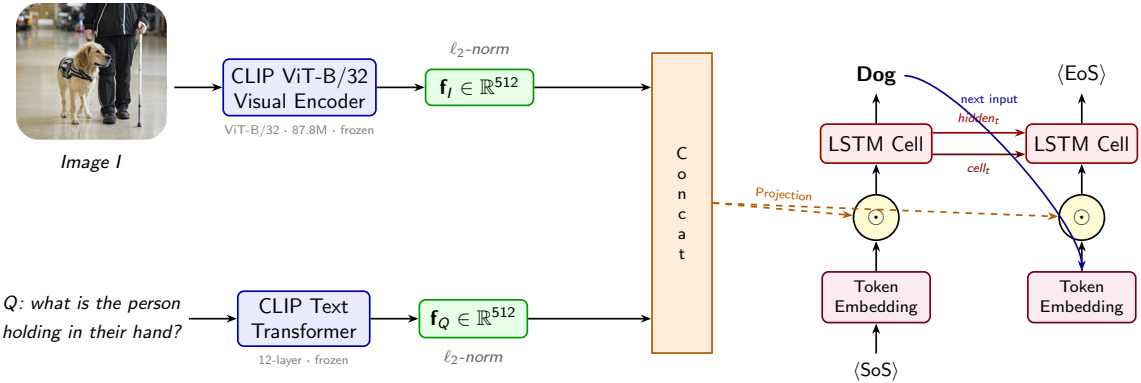

# Training Configuration

## Hyperparameters

| Parameter | Value |
|---|---|
| Optimizer | AdamW |
| $\beta$ | $(0.9,\ 0.98)$, $\epsilon{=}10^{-9}$ |
| LR (decoder) | $4.1 \times 10^{-3}$ |
| Scheduler | MultiStepLR, $\gamma{=}0.37$ |
| Milestones | $[6, 12, 18, 24, 30]$ |
| Dropout | 0.42 |
| Max epochs | 36 |
| EarlyStopping | patience $= 8$ |
| Random seed | 42 (fixed) |

## LR Milestone Derivation

Milestones distributed by $\sqrt{T}$:

$$m_k = \text{round}\left(T \cdot \frac{k}{\sqrt{T}}\right), \quad k = 1, \ldots, \lfloor \sqrt{T} \rfloor$$

For $T{=}36$: milestones $= [6, 12, 18, 24, 30]$

## Inference: Nucleus Sampling

$$V_p = \arg\min_V \left[ \sum_{w \in V} P(w) \geq p \right]$$

Temperature $\tau{=}0.1$, top-$p{=}0.9$

# Quantitative Results

| Experiment | VQA Acc | BLEU-1 | F1 |
|---|---|---|---|
| Exp-B (unfreeze 3L) | 0.541 | 0.439 | 44.07 |
| Exp-A (unfreeze 2L) | 0.542 | 0.455 | 45.88 |
| **Baseline** (frozen) | **0.567** | **0.482** | **48.77** |

## Key Finding

Frozen CLIP encoder **outperforms** both unfreezing variants on all metrics.
Selective unfreezing causes catastrophic forgetting without a warm-up.

| Method | Acc | CIDEr | BLEU | METEOR |
|---|---|---|---|---|
| Q+I [18] | 0.137 | 0.224 | 0.000 | 0.078 |
| Q+I+A [24] | 0.145 | 0.237 | 0.000 | 0.082 |
| Q+I+BUA [6] | 0.134 | 0.226 | 0.000 | 0.077 |
| FT [18] | 0.466 | 0.675 | 0.314 | 0.297 |
| FT [24] | 0.469 | 0.691 | 0.351 | 0.299 |
| FT [6] | **0.475** | **0.713** | 0.359 | **0.309** |
| VizWiz [18] | 0.465 | 0.654 | 0.353 | 0.298 |
| VizWiz [24] | 0.469 | 0.661 | 0.356 | 0.302 |
| VizWiz [6] | 0.469 | 0.675 | **0.396** | 0.306 |

*Performance of VQA methods on the VizWiz test data: https://arxiv.org/pdf/1802.08218*

# Loss Curves

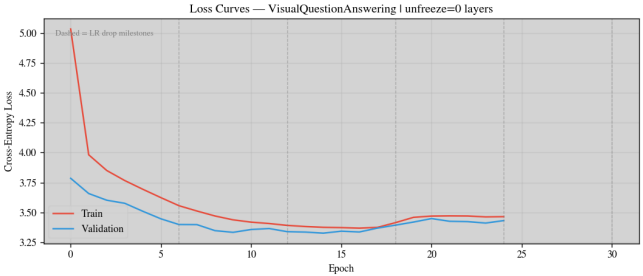


## Observations

- Train loss decreases steadily
- Val loss plateaus after epoch 3
- Gap $\approx$ 1.54 suggests an overfitting.
- LR drops do not rescue val loss

## Possible Causes

- Val set too small (2,053)
- High distribution variance in VizWiz
- Decoder capacity mismatch

# Conclusion

## Contributions

1. **Generative VQA pipeline** on VizWiz — handles unanswerable queries natively
2. **Ablation study** (0, 2, 3 unfrozen layers) reveals frozen CLIP generalises best
3. **VQA Accuracy** as primary metric — correct evaluation for this task

## Best Result

**Baseline** (frozen CLIP): VQA Acc = 0.567, BLEU-1 = 0.482
Exceeds VizWiz fine-tuned baselines by ≈10pp

## Limitations & Future Work

- **No LR warmup** — main cause of catastrophic forgetting in Exp-A/B
- LSTM decoder — cross-attention would be stronger
- No domain augmentation (blur, rotation)
- Compute constraint: single M1 Pro run per config

# Appendix A: Pipeline Improvements (v1 $\rightarrow$ v2)

| **Component** | **v1 (baseline)** | **v2 (this work)** |
|---|---|---|
| Random seed | Random per run | Fixed $= 42$ |
| Train/Val split | 99/1 | **90/10** |
| LR scheduling | Double-step (bug) | Lightning auto-step |
| Milestone calc | `int()` — float error | `round()` |
| Yes/No label | First annotator | **Majority vote** |
| CLIP unfreeze | All-or-nothing | **Selective last** $N$ |
| LR for CLIP | Uniform | **Layer-wise** ($\times 0.1$) |
| Primary metric | SQuAD EM/F1 | **VQA Accuracy** |
| Gradient accum | None | $K$=2 or 3 |
| Mixed precision | None | `16-mixed` (GPU) |

# Appendix B: Full Architecture Specifications

CLIP ViT-B/32

| **Property** | **Value** |
|---|---|
| Input size | $224 \times 224 \times 3$ |
| Patch size | $32 \times 32$ |
| # Patches | $7 \times 7 = 49$ |
| Width | 768 |
| Layers | 12 |
| Heads | 12 |
| Output dim | 512 |
| Total params | 87.8M |

Model Parameter Summary

| **Component** | **Params** |
|---|---|
| ViT-B/32 (visual) | 87.8M |
| Text Transformer | 37.8M |
| Token Embedding | 25.3M |
| LayerNorm | 1.0K |
| Decoder (LSTM) | 53.3M |
| **Total** | **204.5M** |
| **Trainable** | **67.8M** (33.2%) |

# Thank You

Questions & Discussion

---

References:
`VizWiz VQA Challenge:` vizwiz.org

`CLIP:` Radford et al., ICML 2021
`ViT:` Dosovitskiy et al., ICLR 2021
`Attention:` Vaswani et al., NeurIPS 2017
`Bahdanau Attention:` Bahdanau et al., ICLR 2015