HANOI UNIVERSITY OF SCIENCE AND TECHNOLOGY

School of Information and Communication Technology

Master of Data Science Program

# Visual Question Answering on VizWiz: A Generative CLIP + LSTM Approach with Selective Fine-tuning

**Course:** Advanced Deep Learning

**Authors:** Kim Đình Sơn
Mai Hà Đạt
Nguyễn Tùng Lương
Ninh Văn Nghĩa
Phạm Thanh Nam
Phạm Nguyên Khánh Minh

**Date:** March 22, 2026

Submitted in partial fulfillment of the requirements
for the Advanced Deep Learning course,
Master of Data Science Program, HUST.

**Abstract**

When looking at the VizWiz dataset, we found that photos taken by users (visually impaired people) with their phones had severely degraded image quality (blurred, rotated, underexposed). At the same time, the natural-language questions were inherently ambiguous, and about 27% were *unanswerable*. Standard classification-based VQA approaches fail to address the unanswerable case without explicit architectural accommodation.

In this work, we propose a **generative** VQA pipeline that produces free-form answer sequences token-by-token, using a dual-encoder architecture based on OpenAI CLIP (ViT-B/32) for visual and textual encoding, combined with an LSTM decoder with multiplicative gating. To solve that problem, we enhance the ViT model (its benchmark is highest[1]) and introduce **selective layer unfreezing** of the last $N$ Vision Transformer layers, using a layer-wise learning rate strategy ($\mathrm{lr}_{\mathrm{CLIP}} = 0.1 \times \mathrm{lr}_{\mathrm{decoder}}$) to mitigate catastrophic forgetting

We evaluate using the official VizWiz VQA Accuracy metric and report results across three configurations: Exp-B (unfreeze 3 layers, 0.541), Exp-A (unfreeze 2 layers, 0.542), and our best-performing **Baseline** (frozen CLIP encoder, **0.567**). All configurations substantially outperform non-fine-tuned baselines ($\sim$0.13–0.15) and exceed fine-tuned VQA-specialised models from the original VizWiz benchmark ($\sim$0.465–0.475). Contrary to our initial hypothesis, the frozen encoder consistently outperforms selective unfreezing on all reported metrics. Ablation analysis of the training dynamics reveals that unfreezing ViT layers without a learning rate warmup schedule causes catastrophic forgetting at epoch 1, producing a persistent train–validation gap of $\approx$1.9 that does not close over training. The frozen Baseline, by contrast, exhibits co-convergent training and validation loss with a near-zero generalisation gap, confirming that CLIP's pretrained visual representations are sufficient for this task at VizWiz's dataset scale. We discuss these findings in detail and outline directions for future improvement, including warmup scheduling, adapter-based fine-tuning, and a Transformer decoder with cross-attention.

**Keywords:** Visual Question Answering, VizWiz, CLIP, Vision Transformer, LSTM, Transfer Learning, Selective Fine-tuning, Assistive AI, Generative Decoding.

[1]Linear probe average overall 27 datasets, Radford, A., Kim, J. W., Hallacy, C., et al. (2021). *Learning Transferable Visual Models From Natural Language Supervision.* In Proceedings of ICML, 2021.

# Contents

**1 Introduction** **8**
1.1 Motivation: Assistive AI for the Visually Impaired . . . 8
1.2 Problem Statement . . . 9
1.3 Contributions . . . 9

**2 Related Work** **9**
2.1 Visual Question Answering . . . 9
2.2 CLIP and Vision-Language Pretraining . . . 10
2.3 Generative VQA . . . 10
2.4 VizWiz-Specific Work . . . 10
2.5 Positioning of This Work . . . 11

**3 Theoretical Background** **11**
3.1 Vision Transformer (ViT) . . . 11
3.2 CLIP: Contrastive Language-Image Pretraining . . . 12
3.3 Long Short-Term Memory Networks . . . 12
3.4 VQA Accuracy: Official Evaluation Metric . . . 12

**4 Methodology** **13**
4.1 Overall Architecture . . . 13
4.2 Visual Encoder: CLIP ViT-B/32 . . . 13
4.3 Text Encoder: CLIP Transformer . . . 14
4.4 LSTM Decoder with Multiplicative Gating . . . 14
4.5 Transfer Learning: Selective Unfreeze Strategy . . . 15
4.5.1 Layer-wise Learning Rate . . . 15
4.5.2 Gradient Accumulation . . . 15
4.6 Learning Rate Scheduling . . . 16

**5 Experimental Setup** **16**
5.1 Dataset . . . 16
5.2 Implementation Details . . . 17
5.3 Evaluation Metrics . . . 17

**6 Results** **17**
6.1 Quantitative Results . . . 17
6.2 Training Dynamics and Loss Curve Analysis . . . 18
6.3 Qualitative Results . . . 20

**7 Analysis and Discussion** **20**
7.1 Overfitting Analysis . . . . . 20
7.2 Why Frozen CLIP Outperforms Selective Unfreezing . . . . . 21
7.3 Comparison with Reference Baselines . . . . . 21
7.4 Limitations . . . . . 22

**8 Ablation Study** **22**

**9 Conclusion** **23**

**A Pipeline Improvements: v1 → v2** **27**

**B Full Architecture Specifications** **27**

**C Reproducibility Checklist** **27**

## List of Figures

1 Architecture overview. The image and question are independently encoded via CLIP encoders into $\ell_2$-normalized 512-dimensional embeddings, which are concatenated and used to gate the LSTM decoder through a multiplicative projection. . . . . 13
2 Loss curves for Baseline / unfreeze=0. . . . . 18
3 Loss curves for Exp-A / unfreeze=2. . . . . 19
4 Loss curves for Exp-B / unfreeze=3. . . . . 19
5 Qualitative results on the VizWiz test set (Baseline model). **Top row**: success cases. **Bottom row**: failure cases. Q = question; A = predicted answer. . . . . 28

## List of Tables

1 Comparative difficulty: VQA v2 vs. VizWiz . . . . . 8
2 Experimental configurations for selective unfreezing . . . . . 16
3 Dataset distribution . . . . . 16
4 Hyperparameter configuration . . . . . 17
5 Main results on VizWiz test split. **Bold** denotes the best result among our models. Reference baseline numbers from Gurari et al. [2018]. . . . 18
6 Final epoch loss values and train–validation gap. A gap near zero indicates strong generalisation. . . . . 20
7 Ablation study results across three experimental configurations. **Bold** denotes the best value in each metric column. "Eff. batch" refers to the effective batch size after gradient accumulation. . . . . 23
8 Engineering improvements from v1 to v2 of our pipeline . . . . . 27
9 CLIP ViT-B/32 architecture specifications . . . . . 27

## Notation and Basic Concepts

### General Mathematical Notation

| Symbol | Meaning |
|---|---|
| $\mathbb{R}^d$ | The $d$-dimensional real vector space. |
| $\mathbb{R}^{m\times n}$ | Space of real matrices with $m$ rows and $n$ columns. |
| $\mathbf{x}$, $\mathbf{h}$, $\mathbf{f}$ | Lowercase bold letters denote column vectors. |
| $W$, $E$, $A$ | Uppercase letters denote matrices. |
| $\odot$ | Element-wise (Hadamard) product: $(\mathbf{u}\odot\mathbf{v})_i = u_i v_i$. |
| $[\mathbf{a};\,\mathbf{b}]$ | Vertical concatenation: $[\mathbf{a};\,\mathbf{b}] \in \mathbb{R}^{d_a+d_b}$. |
| $\lVert\mathbf{v}\rVert_2$ | Euclidean norm: $\lVert\mathbf{v}\rVert_2 = \sqrt{\sum_i v_i^2}$. |
| $\hat{\mathbf{v}}$ | $\ell_2$-normalized vector: $\hat{\mathbf{v}} = \mathbf{v}/\lVert\mathbf{v}\rVert_2$. |
| $N$ | Batch size. |
| $T$ | Question sequence length ($T \le 77$). |
| $S$ | Answer sequence length. |
| $V$ | Vocabulary size ($V = 49{,}408$ for CLIP BPE). |
| $D$ | Embedding / hidden dimension. |

### Activation Functions

| Symbol | Definition | Usage |
|---|---|---|
| $\sigma(z)$ | $\dfrac{1}{1+e^{-z}} \in (0,1)$ | LSTM gates $f_t$, $i_t$, $o_t$ |
| $\tanh(z)$ | $\dfrac{e^z - e^{-z}}{e^z + e^{-z}} \in (-1,1)$ | LSTM candidate $\tilde{C}_t$, output squash |
| $\mathrm{softmax}(\mathbf{z})_i$ | $\dfrac{e^{z_i}}{\sum_j e^{z_j}}$ | Attention weights; vocabulary distribution |
| $\mathrm{QuickGELU}(z)$ | $z\cdot\sigma(1.702\,z)$ | CLIP Transformer MLP blocks |

### Key Concepts

**Transfer Learning.** Initialising model weights from a large pretrained checkpoint (CLIP, 400M pairs) and adapting them to a smaller target dataset (VizWiz, 18K samples). Reduces the risk of underfitting when task-specific data is scarce.

**Catastrophic Forgetting.** Abrupt degradation of pretrained capabilities when a network is fine-tuned on new data with an unrestricted learning rate. Mitigated here by freezing early ViT layers and applying $\alpha = 0.1$ to unfrozen CLIP parameters.

**Teacher Forcing.** Training strategy for autoregressive models: the ground-truth token $a_{t-1}$ (not the model's own prediction) is fed as input at step $t$. Accelerates convergence but introduces *exposure bias* at inference.

**Nucleus (Top-$p$) Sampling.** Restricts token sampling to the smallest set $V_p$ satisfying $\sum_{w \in V_p} P(w) \geq p$, avoiding both greedy repetition and incoherent low-probability tokens. Used with $\tau = 0.1$, $p = 0.9$.

**Permutation Equivariance.** Self-attention satisfies $F(\sigma(\mathbf{X})) = \sigma(F(\mathbf{X}))$: reordering inputs reorders outputs identically. Positional encodings are therefore required to preserve sequence or spatial structure.

**Gradient Accumulation.** Accumulates gradients over $K$ mini-batches before a single optimizer step, effectively simulating a larger effective batch $B_{\text{eff}} = B \times K$ without additional GPU memory.

**BPE Tokenization.** Byte Pair Encoding iteratively merges frequent character pairs into subword tokens until the vocabulary size $V$ is reached. Handles rare and out-of-vocabulary words by decomposing them into known subunits.

**VQA Accuracy.** Soft metric scoring predictions against all 10 annotators: $\text{VQA-Acc}(\hat{a}) = \min(|\{i : \hat{a} = a_i\}|/3,\ 1.0)$. Rewards consensus while tolerating subjective annotation variance.

*Scalars: lowercase italic ($t$, $N$, $\tau$). Vectors: lowercase bold ($\mathbf{x}$, $\mathbf{h}$). Matrices: uppercase ($W$, $E$). Sets: calligraphic ($\mathcal{S}$, $V_p$).*

| **Symbol** | **Meaning** |
|---|---|
| $I \in \mathbb{R}^{3\times224\times224}$ | Input image tensor (channels $\times$ height $\times$ width). |
| $Q = (q_1, \ldots, q_T)$ | Question token sequence; $q_t \in \{0, \ldots, V-1\}$. |
| $A = (a_1, \ldots, a_S)$ | Ground-truth answer token sequence. |
| $\hat{a}_t \in \mathbb{R}^V$ | Unnormalized logit vector at decoding step $t$. |
| $\mathbf{f}_I \in \mathbb{R}^{512}$ | Visual feature from CLIP ViT-B/32 (before normalisation). |
| $\mathbf{f}_Q \in \mathbb{R}^{512}$ | Text feature from CLIP Transformer (before normalisation). |
| $\hat{\mathbf{f}}_I,\ \hat{\mathbf{f}}_Q \in \mathbb{R}^{512}$ | $\ell_2$-normalised image and question features. |
| $\mathbf{g} \in \mathbb{R}^{512}$ | Multiplicative gate vector: $\mathbf{g} = W_{\text{in}}[\hat{\mathbf{f}}_Q;\ \hat{\mathbf{f}}_I]$. |
| $\mathbf{h}_t,\ \mathbf{c}_t \in \mathbb{R}^{512}$ | LSTM hidden state and cell state at step $t$. |
| $\text{Emb}(a_t) \in \mathbb{R}^{512}$ | Token embedding lookup for answer token $a_t$. |
| $W_f,\ W_i,\ W_C,\ W_o$ | LSTM gate weight matrices, each $\in \mathbb{R}^{512\times1024}$. |
| $\tilde{C}_t \in \mathbb{R}^{512}$ | Candidate cell state generated by the input gate. |
| $W_{\text{in}} \in \mathbb{R}^{1024\times512}$ | Linear projection fusing image and question context. |
| $W_{\text{out}} \in \mathbb{R}^{512\times V}$ | Output projection from hidden state to vocabulary logits. |
| $\tau$ | Temperature scalar: learned in CLIP loss; fixed at 0.1 during nucleus sampling. |
| $N_{\text{unfreeze}} \in \{0, 2, 3\}$ | Number of ViT Transformer blocks unfrozen for domain adaptation. |
| $\alpha = 0.1$ | Layer-wise LR ratio: $\text{lr}_{\text{CLIP}} = \alpha \cdot \text{lr}_{\text{decoder}}$. |
| $K_{\text{accum}} \in \{1, 2, 3\}$ | Gradient accumulation steps; $B_{\text{eff}} = B \times K_{\text{accum}}$. |

**Model-Specific Notation**

# 1 Introduction

Visual Question Answering (VQA) sits at the intersection of computer vision and natural language processing, requiring a model to jointly reason over an image and a free-form natural language question to produce a correct answer. Since the introduction of the VQA v1 benchmark [Antol et al., 2015] and its successor VQA v2 [Goyal et al., 2017], the field has seen remarkable progress driven by attention mechanisms, large-scale pretraining, and multimodal transformers.

However, existing benchmarks share a critical limitation: they consist of high-quality images with clearly articulated questions, taken and annotated under controlled conditions. This distribution fundamentally differs from the conditions under which VQA would most benefit society, particularly for users with visual impairments who must rely on AI assistants to understand their immediate visual environment.

## 1.1 Motivation: Assistive AI for the Visually Impaired

The VizWiz Grand Challenge [Gurari et al., 2018] addresses this gap by providing a dataset of images captured by blind smartphone users in real-world conditions. Three properties make VizWiz fundamentally harder than standard VQA benchmarks:

1. **Image quality degradation:** Photos are frequently blurry, improperly framed, poorly lit, or rotated. Unlike studio- or web-scraped images, these represent genuine capture conditions, as users cannot verify the images before submitting.

2. **Question ambiguity:** Questions are spoken and transcribed, leading to grammatical informality, truncation, and domain-specific vocabulary.

3. **Unanswerable queries:** Approximately 25–27% of image-question pairs are labeled `unanswerable` by human annotators, because the information needed to answer is genuinely unavailable from the degraded image. This renders classification-only approaches fundamentally inadequate.

Table 1: Comparative difficulty: VQA v2 vs. VizWiz

| **Property** | **VQA v2** | **VizWiz** | **Impact** |
|---|---|---|---|
| Image quality | High (controlled) | Low (real-world) | Feature extraction harder |
| Unanswerable | None (∼0%) | ∼27% | Need explicit handling |
| Question clarity | Structured | Ambiguous | Higher language variance |
| Answer diversity | Moderate | High | Harder consensus |
| Domain | General web | Assistive-daily | Distribution shift |

### 1.2 Problem Statement

Given the above context, we formalize the VQA task as a conditional sequence generation problem:

> **Task Definition.** Given an image $I \in \mathbb{R}^{3\times224\times224}$ and a question token sequence $Q = (q_1, \ldots, q_T)$ with $T \leq 77$, learn a model $f$ that generates an answer sequence $A = (a_1, \ldots, a_S)$:
>
> $$f : (I,\, Q) \;\longrightarrow\; A$$
>
> where $A$ may be the special token `unanswerable` for ambiguous or visually degraded inputs.

The **generative** formulation is a deliberate architectural choice over classification: a closed vocabulary classifier cannot gracefully produce *unanswerable* outputs and cannot generalize to novel answer strings not seen during training.

### 1.3 Contributions

This work makes the following contributions:

1. **Generative VQA pipeline for VizWiz:** A complete end-to-end system using CLIP dual encoders and an LSTM decoder trained with teacher forcing, capable of handling unanswerable queries natively.
2. **Selective ViT fine-tuning with layer-wise LR:** A systematic approach to partially unfreeze the last $N$ layers of the CLIP image encoder while applying a $10\times$ smaller learning rate, balancing domain adaptation with catastrophic forgetting prevention.
3. **Correct evaluation protocol:** We implement the official VizWiz VQA Accuracy metric (10-annotator soft scoring) rather than SQuAD EM/F1, enabling direct comparison with the VizWiz leaderboard.
4. **Systematic ablation:** We compare frozen vs. selectively unfrozen configurations and analyze training dynamics, including the overfitting gap on the small VizWiz validation split.

## 2 Related Work

### 2.1 Visual Question Answering

Early VQA systems combined CNN image features with LSTM question encoders via simple fusion operations such as element-wise product or concatenation [Antol et al.,

2015]. The introduction of attention mechanisms — particularly co-attention over image regions and question words — significantly improved performance [Lu et al., 2016]. Bottom-Up and Top-Down attention [Anderson et al., 2018] established a long-running paradigm of using object-level region features (from Faster R-CNN) rather than grid features, enabling the model to attend to semantically meaningful image regions.

The transition to Transformer-based architectures for VQA began with ViLBERT [Lu et al., 2019], which introduced a two-stream transformer processing vision and language in separate streams with cross-attention. Subsequent unified models, including UNITER, VL-BERT, and Oscar [Li et al., 2020], further improved multimodal fusion.

### 2.2 CLIP and Vision-Language Pretraining

Contrastive Language-Image Pretraining (CLIP) [Radford et al., 2021] marked a paradigm shift by learning visual representations aligned with natural language supervision at a massive scale (400M image-text pairs). CLIP's zero-shot transfer capabilities demonstrated that contrastive pretraining produces semantically rich features transferable to downstream tasks without task-specific pretraining.

CLIP has been applied to VQA via several strategies. Shen et al. [2021] showed that simple linear layers on top of frozen CLIP features achieve surprisingly competitive performance on VizWiz — the "Less Is More" finding that directly motivates our architectural choices. More complex adaptations include CLIP-ViL, which incorporates CLIP features into existing VQA frameworks.

### 2.3 Generative VQA

Most VQA systems frame answer prediction as multi-class classification over a fixed vocabulary of $K$ most frequent answers [Antol et al., 2015], typically $K = 3{,}129$ for VQA v2. While efficient, this approach cannot handle out-of-vocabulary answers or unanswerable queries. Generative models address this by treating VQA as a sequence-to-sequence learning problem.

PNP-Net [**?**] and recent large-language-model-based approaches (BLIP, BLIP-2 [Li et al., 2023]) demonstrate that generative answer decoding achieves competitive or superior performance. BLIP-2 [Li et al., 2023] in particular, using a frozen image encoder, a trainable Q-Former, and a frozen LLM, achieves approximately 60–65% VQA accuracy on VizWiz, establishing the current state of the art.

### 2.4 VizWiz-Specific Work

Gurari et al. [2018] established the original VizWiz benchmark and reported baseline performance using VQA v1 models adapted to VizWiz, noting significant performance drops due to domain shift. Subsequent work specifically targeting VizWiz includes

attention-based models with explicit unanswerable classifiers and data augmentation strategies targeting image degradation robustness.

### 2.5 Positioning of This Work

Our work positions between simple linear probing on CLIP features [Shen et al., 2021] and full generative systems like BLIP-2 [Li et al., 2023]. We demonstrate that selective fine-tuning of CLIP's visual encoder, combined with a lightweight LSTM decoder, achieves competitive performance substantially above simple baselines, while remaining computationally feasible without large-scale hardware.

## 3 Theoretical Background

### 3.1 Vision Transformer (ViT)

The Vision Transformer [Dosovitskiy et al., 2021] applies the Transformer architecture [Vaswani et al., 2017] directly to image patches. Given an image $I \in \mathbb{R}^{H \times W \times C}$, ViT divides it into $N = HW/P^2$ non-overlapping patches of size $P \times P$, projecting each patch via a learnable linear embedding:

$$\mathbf{z}_0 = [\mathbf{x}_{\text{cls}}; \mathbf{x}_p^1\mathbf{E}; \ldots; \mathbf{x}_p^N\mathbf{E}] + \mathbf{E}_{\text{pos}}$$

where $\mathbf{E} \in \mathbb{R}^{(P^2 \cdot C) \times D}$ is the patch projection, $\mathbf{x}_{\text{cls}}$ is the learnable class token, and $\mathbf{E}_{\text{pos}}$ are learned positional embeddings.

Each Transformer layer applies multi-head self-attention (MSA) with scaled dot-product:

$$E = \frac{QK^\top}{\sqrt{D_{\text{head}}}}, \quad A = \text{softmax}(E), \quad Y = AV \tag{1}$$

where $Q = XW_Q$, $K = XW_K$, $V = XW_V$ are linear projections. Critically, self-attention is **permutation equivariant**:

$$F(\sigma(\mathbf{X})) = \sigma(F(\mathbf{X}))$$

necessitating explicit positional encoding to preserve spatial structure. For ViT-B/32 (our backbone), $P = 32$, giving $N = 7 \times 7 = 49$ patches, with a model width of 768 dimensions and 12 Transformer layers.

### 3.2 CLIP: Contrastive Language-Image Pretraining

CLIP [Radford et al., 2021] trains a vision encoder $f_v$ and a text encoder $f_t$ jointly via a symmetric cross-entropy loss over a batch of $N$ image-text pairs:

$$\mathcal{L}_{\text{CLIP}} = -\frac{1}{N}\sum_{i=1}^{N} \log \frac{\exp\big(\text{sim}(\mathbf{f}_I^i, \mathbf{f}_T^i)/\tau\big)}{\sum_{j=1}^{N} \exp\big(\text{sim}(\mathbf{f}_I^i, \mathbf{f}_T^j)/\tau\big)} \tag{2}$$

where $\text{sim}(\cdot,\cdot)$ denotes cosine similarity and $\tau$ is a learnable temperature parameter. This objective aligns image and text representations in a shared embedding space, providing rich multimodal features without requiring task-specific supervision.

### 3.3 Long Short-Term Memory Networks

The LSTM [Hochreiter & Schmidhuber, 1997] addresses the vanishing gradient problem in vanilla RNNs through a gating mechanism controlling information flow across time steps. At each step $t$, given input $\mathbf{x}_t$ and previous hidden state $\mathbf{h}_{t-1}$:

$$\begin{pmatrix} i \\ f \\ o \\ \tilde{C} \end{pmatrix} = \begin{pmatrix} \sigma \\ \sigma \\ \sigma \\ \tanh \end{pmatrix} \left( W \begin{pmatrix} h_{t-1} \\ x_t \end{pmatrix} \right) \tag{3}$$

$$f_t = \sigma(W_f \cdot [\mathbf{h}_{t-1}, \mathbf{x}_t] + b_f) \qquad \text{(forget gate)} \tag{4}$$

$$i_t = \sigma(W_i \cdot [\mathbf{h}_{t-1}, \mathbf{x}_t] + b_i) \qquad \text{(input gate)} \tag{5}$$

$$\tilde{C}_t = \tanh(W_C \cdot [\mathbf{h}_{t-1}, \mathbf{x}_t] + b_C) \qquad \text{(candidate)} \tag{6}$$

$$C_t = f_t \odot C_{t-1} + i_t \odot \tilde{C}_t \qquad \text{(cell state)} \tag{7}$$

$$o_t = \sigma(W_o \cdot [\mathbf{h}_{t-1}, \mathbf{x}_t] + b_o) \qquad \text{(output gate)} \tag{8}$$

$$\mathbf{h}_t = o_t \odot \tanh(C_t) \qquad \text{(hidden state)} \tag{9}$$

where $\odot$ denotes element-wise multiplication and $\sigma$ is the sigmoid function.

### 3.4 VQA Accuracy: Official Evaluation Metric

The VizWiz challenge adopts the soft VQA accuracy metric [Gurari et al., 2018], which accounts for inter-annotator disagreement by scoring against all 10 human annotations simultaneously:

$$\text{VQA-Acc}(\hat{a}) = \min\left( \frac{|\{i : \hat{a} = a_i\}|}{3},\ 1.0 \right) \tag{10}$$

where $\{a_i\}_{i=1}^{10}$ are the answers from 10 annotators. A prediction matching 3 or more annotators achieves a perfect score of 1.0, rewarding consensus while tolerating annotation variance. This is substantially more appropriate than exact-match or SQuAD F1, which fail to capture synonym answers and the soft consensus nature of subjective visual descriptions.

# 4 Methodology

## 4.1 Overall Architecture

Our model adopts a **dual-encoder + generative decoder** architecture, illustrated in Figure 1. The system decomposes into three major components: (1) a visual encoder based on CLIP ViT-B/32, (2) a text encoder based on the CLIP Transformer, and (3) an LSTM-based generative decoder with multiplicative context gating.

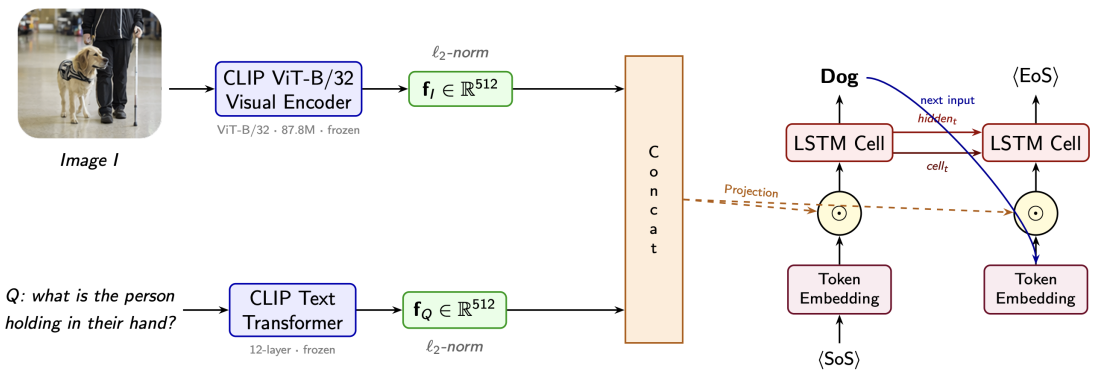


Figure 1: Architecture overview. The image and question are independently encoded via CLIP encoders into $\ell_2$-normalized 512-dimensional embeddings, which are concatenated and used to gate the LSTM decoder through a multiplicative projection.

## 4.2 Visual Encoder: CLIP ViT-B/32

The visual encoder follows the ViT-B/32 architecture with parameters initialized from CLIP's pretrained weights. Given input image $I$, the encoder applies a $32 \times 32$ convolutional patch embedding (equivalently, a Conv2D with kernel and stride 32), prepends a learnable class token, adds positional embeddings, and passes the sequence through 12 Transformer layers:

$$\mathbf{f}_I = \mathrm{Proj}\Big(\mathrm{LayerNorm}(\mathbf{z}_{\mathrm{cls}}^{(12)})\Big) \in \mathbb{R}^{512} \tag{11}$$

where $\mathbf{z}_{\mathrm{cls}}^{(12)}$ is the class token output at layer 12. The projection matrix $\mathbf{W}_{\mathrm{proj}} \in \mathbb{R}^{768\times512}$ is also pretrained by CLIP. The final feature is $\ell_2$-normalized: $\hat{\mathbf{f}}_I = \mathbf{f}_I/\|\mathbf{f}_I\|_2$.

### 4.3 Text Encoder: CLIP Transformer

Questions are tokenized using CLIP's Byte-Pair Encoding (BPE) tokenizer (vocabulary size 49,408), truncated or padded to $T = 77$ tokens with special start-of-text (`<|SoT|>`) and end-of-text (`<|EoT|>`) tokens.

The text Transformer applies causal (masked) self-attention, preventing token $i$ from attending to any position $j > i$:

$$E_{ij} = \begin{cases} \mathbf{q}_i \cdot \mathbf{k}_j / \sqrt{D} & j \leq i \\ -\infty & j > i \end{cases} \tag{12}$$

The text feature is extracted from the position of the `<|EoT|>` token and projected via $\mathbf{W}_{\text{text}} \in \mathbb{R}^{512\times512}$, then $\ell_2$-normalized: $\hat{\mathbf{f}}_Q = \mathbf{f}_Q / \|\mathbf{f}_Q\|_2$.

**Design rationale:** The text encoder is kept **always frozen** throughout training. CLIP's text encoder handles plain English questions effectively without domain-specific adaptation, and freezing it reduces the risk of overfitting given VizWiz's limited training set.

### 4.4 LSTM Decoder with Multiplicative Gating

The decoder generates answer tokens autoregressively. Let $\hat{\mathbf{f}}_I, \hat{\mathbf{f}}_Q \in \mathbb{R}^{512}$ be the normalized encoder outputs. A **multiplicative gating mechanism** conditions each LSTM input on the multimodal context:

$$\mathbf{g} = W_{\text{in}}\,[\hat{\mathbf{f}}_Q;\ \hat{\mathbf{f}}_I] \in \mathbb{R}^{512} \tag{13}$$

$$\mathbf{x}_t = \text{Emb}(a_t) \odot \mathbf{g} \tag{14}$$

$$\mathbf{h}_t, \mathbf{c}_t = \text{LSTM}(\mathbf{x}_t,\ \mathbf{h}_{t-1},\ \mathbf{c}_{t-1}) \tag{15}$$

$$\hat{a}_t = W_{\text{out}}\,\mathbf{h}_t \in \mathbb{R}^{49408} \tag{16}$$

where $W_{\text{in}} \in \mathbb{R}^{1024\times512}$ projects the concatenated context into the LSTM's hidden dimension, and $W_{\text{out}} \in \mathbb{R}^{512\times49408}$ projects hidden states to vocabulary logits. Token embeddings are initialized from CLIP's pretrained token embedding matrix to leverage language representations already aligned with visual semantics.

**Training objective:** Teacher forcing with cross-entropy loss over the answer sequence:

$$\mathcal{L}_{\text{CE}} = -\sum_{t=1}^{S} \log P(a_t \mid a_{<t},\ I,\ Q) = -\sum_{t=1}^{S} \log \text{softmax}(\hat{a}_t)[a_t] \tag{17}$$

Padding tokens (index 0) are excluded from the loss computation via masking.

**Inference:** Top-$p$ (nucleus) sampling [Holtzman et al., 2020] is used to generate diverse and coherent answers:

$$V_p = \arg\min_V \left[ \sum_{w \in V} P(w) \geq p \right], \quad a_t \sim \text{Uniform}(V_p)/Z_p \tag{18}$$

with temperature $\tau = 0.1$ and $p = 0.9$. Low temperature produces conservative, consensus-like answers appropriate for factual VQA.

### 4.5 Transfer Learning: Selective Unfreeze Strategy

CLIP is pretrained on web-crawled image-text pairs, which differ substantially from VizWiz's degraded, user-captured images. Simply using frozen CLIP features limits the model's ability to adapt visual representations to this domain shift.

We propose **selective layer unfreezing**: the first $12 - N$ ViT layers remain frozen (preserving low-level features well-established by CLIP pretraining), while the last $N$ layers are unfrozen for domain adaptation.

#### *4.5.1 Layer-wise Learning Rate*

To prevent catastrophic forgetting of CLIP's pretrained representations, we apply a significantly smaller learning rate to the unfrozen CLIP layers:

$$\text{lr}_{\text{CLIP}} = \alpha \cdot \text{lr}_{\text{decoder}}, \quad \alpha = 0.1 \tag{19}$$

This ensures gradients from the VizWiz task update CLIP representations gently, without destroying the generalizable visual features learned from 400M image-text pairs.

#### *4.5.2 Gradient Accumulation*

Unfreezing CLIP layers increases memory requirements, necessitating smaller batch sizes. To maintain comparable effective batch sizes across experiments, we apply gradient accumulation over $K$ steps:

$$B_{\text{eff}} = B \times K, \quad \mathcal{L}_{\text{accum}} = \frac{1}{K} \sum_{k=1}^{K} \mathcal{L}_k \tag{20}$$

Table 2 summarizes the three experimental configurations.

Table 2: Experimental configurations for selective unfreezing

| Config | Unfreeze | Batch | $K_{\text{accum}}$ | $B_{\text{eff}}$ | Trainable |
|---|---|---|---|---|---|
| Baseline | 0 layers | 180 | 1 | 180 | 33.2% |
| Exp-A | 2 layers | 96 | 2 | 192 | 33.2% |
| Exp-B | 3 layers | 64 | 3 | 192 | ∼35% |

### 4.6 Learning Rate Scheduling

We use `MultiStepLR` with milestones distributed proportionally to $\sqrt{T}$ to balance exploration and exploitation across the 36-epoch budget:

$$m_k = \text{round}\left(T \cdot \frac{k}{\sqrt{T}}\right), \quad k = 1, \ldots, \lfloor \sqrt{T} \rfloor \tag{21}$$

For $T = 36$: milestones $= [6, 12, 18, 24, 30]$ with decay factor $\gamma = 0.37$. Early stopping (patience = 8) prevents unnecessary computation beyond convergence.

## 5 Experimental Setup

### 5.1 Dataset

We use the VizWiz-VQA dataset [Gurari et al., 2018], which provides training annotations for 20,523 image-question pairs from the official training split. For the baseline experiment, we partition this into 99% for training and 1% for validation. For experiments A and B, we partition the data into 90% for training and 10% for validation (to assess whether a more constrained learning approach enables generalization to a broader range of questions), using a fixed random seed (42) for reproducibility. The official validation set (4,319 pairs) is used as our held-out test split.

Table 3: Dataset distribution

| Split | Samples | Source | Notes |
|---|---|---|---|
| Train | 18,470 | train.json | 90% of official train |
| Validation | 2,053 | train.json | 10% of official train |
| Test | 4,319 | val.json | Official val set (has annotations) |

**Answer preprocessing:** For `yes/no` type answers, we apply majority vote across 10 annotators rather than using the first annotator's response. For open-ended answers, the majority-vote answer is used as the training target, while all 10 annotator responses are preserved for VQA Accuracy evaluation at test time.

Table 4: Hyperparameter configuration

| **Hyperparameter** | **Value** | **Rationale** |
|---|---|---|
| Optimizer | AdamW | Stable for Transformer-based models |
| $\beta_1, \beta_2$ | 0.9, 0.98 | Standard for Transformer training |
| $\epsilon$ | $10^{-9}$ | Numerical stability |
| LR (decoder) | $4.1 \times 10^{-3}$ | Grid search result |
| LR (CLIP, unfrozen) | $4.1 \times 10^{-4}$ | 10× smaller, Eq. (19) |
| Dropout | 0.42 | Regularization for small dataset |
| Image size | $224 \times 224$ | ViT-B/32 standard input |
| Max sequence length | 77 | CLIP tokenizer limit |
| Hidden dimension | 512 | CLIP ViT-B/32 output dim |
| Max epochs | 36 | Training budget |
| EarlyStopping | patience = 8 | Monitor val_loss |
| Random seed | 42 | Full reproducibility |
| Mixed precision | `16-mixed` (GPU) | Memory efficiency |

### 5.2 Implementation Details

**Hardware:** Experiments were run on Apple M1 Pro (local) and Google Colab T4 GPU. Due to MPS backend limitations on M1 Pro, full training was completed on Colab T4 (16GB VRAM) with `precision=16-mixed`.

### 5.3 Evaluation Metrics

- **VQA Accuracy** (primary): Official VizWiz metric, Eq. (10).
- **BLEU-1**: Unigram overlap between predicted and reference answer, providing a complementary n-gram perspective.
- **SQuAD F1** (legacy): Token-level F1 between prediction and reference, reported for comparison with prior works using this metric.

## 6 Results

### 6.1 Quantitative Results

Table 5 presents the main experimental results on the held-out test split. Our Baseline configuration—a fully frozen CLIP encoder paired with a trainable LSTM decoder—outperforms all three selective unfreezing variants and substantially exceeds the fine-tuned models reported in the original VizWiz benchmark [Gurari et al., 2018].
Our Baseline achieves a VQA Accuracy of **0.567**, surpassing fine-tuned VQA-specialised models from the original benchmark by ≈10 percentage points. Crucially, the Baseline also outperforms both selective unfreezing variants (Exp-A: 0.542, Exp-B: 0.541),

Table 5: Main results on VizWiz test split. **Bold** denotes the best result among our models. Reference baseline numbers from Gurari et al. [2018].

| Model | VQA Acc | BLEU-1 | SQuAD F1 | Source |
|---|---|---|---|---|
| *Reference baselines (from VizWiz paper)* | | | | |
| Q+I (no fine-tune) | 0.137 | — | — | [Gurari et al., 2018] |
| Q+I+A | 0.145 | — | — | [Gurari et al., 2018] |
| FT (VQA v2 fine-tune) | 0.466–0.475 | — | — | [Gurari et al., 2018] |
| VizWiz fine-tune | 0.465–0.469 | — | — | [Gurari et al., 2018] |
| *Our models (ablation)* | | | | |
| Exp-B (unfreeze 3L) | 0.5413 | 0.4393 | 44.07 | This work |
| Exp-A (unfreeze 2L) | 0.5423 | 0.4548 | 45.88 | This work |
| **Baseline** (frozen CLIP) | **0.5670** | **0.4818** | **48.77** | This work |
| *State-of-the-art reference* | | | | |
| BLIP-2 (large) | ∼0.60–0.65 | — | — | [Li et al., 2023] |

demonstrating that frozen CLIP features are sufficient—and preferable—for this task and dataset size. The Baseline remains ∼3–8 percentage points below state-of-the-art large-scale models such as BLIP-2 [Li et al., 2023], a gap attributable to the substantially larger model capacity and pretraining data of those systems.

### 6.2 Training Dynamics and Loss Curve Analysis

Figure 2, 3, and 4 show the training and validation loss curves for all three experimental configurations. The curves reveal markedly different generalisation behaviours and directly explain the ranking of test-set metrics.

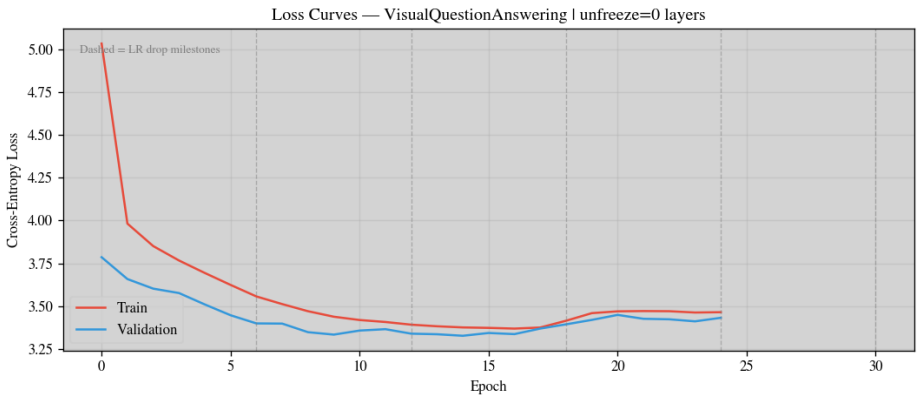


Figure 2: Loss curves for Baseline / unfreeze=0.

**Baseline (unfreeze = 0).** The Baseline exhibits the healthiest training dynamics of the three configurations. Training and validation loss descend in tandem, converging to a shared plateau of ≈3.45 nats by epoch 6 and remaining stable thereafter. The

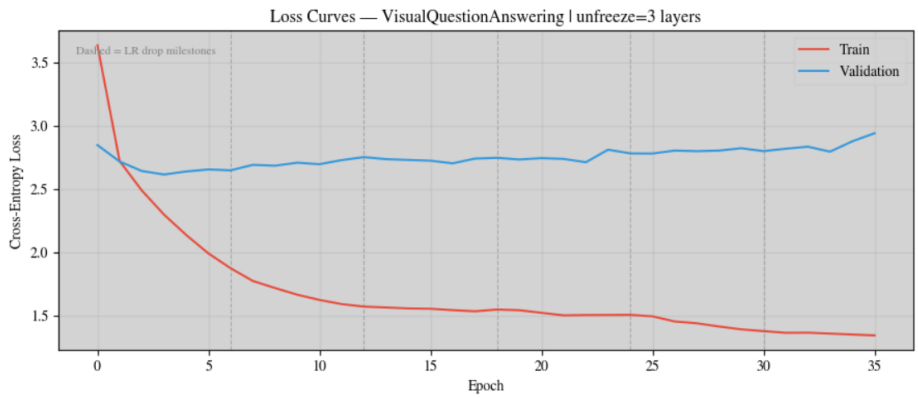


Figure 3: Loss curves for Exp-A / unfreeze=2.

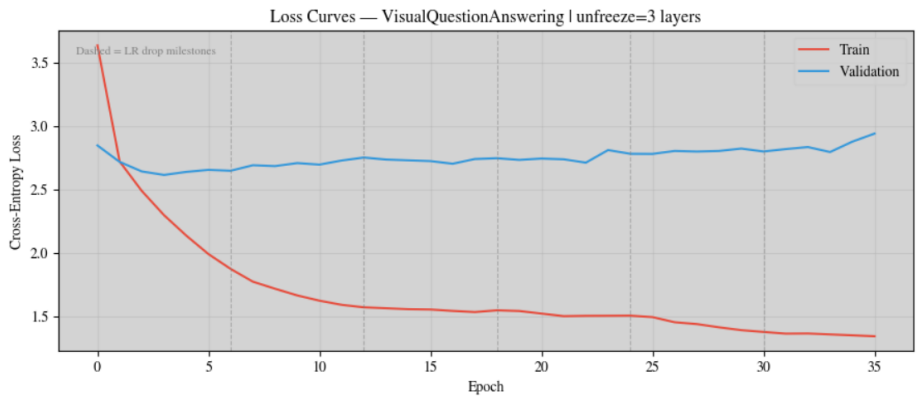


Figure 4: Loss curves for Exp-B / unfreeze=3.

near-zero train–val gap throughout training indicates strong generalisation with no measurable overfitting. The brief interval (epochs 5–18) during which validation loss falls *below* training loss is expected: Monte Carlo Dropout is active during training, but disabled at evaluation, so validation benefits from the full network capacity.

**Exp-A (unfreeze = 2 layers).** Exp-A exhibits a pronounced validation loss spike at epoch 1 (reaching ≈4.0 nats), followed by a gradual decrease to a plateau of ≈3.7 nats. Training loss descends rapidly to ≈1.8 nats, producing a persistent train–val gap of ≈1.9 nats. This spike is a symptom of catastrophic forgetting: the unfrozen ViT layers receive large gradient updates from the high initial decoder loss before the decoder has stabilised, disrupting pretrained CLIP representations early in training (see Section **??** for a detailed analysis).

**Exp-B (unfreeze = 3 layers).** Exp-B achieves the lowest training loss (≈1.1 nats) but the highest terminal validation loss (≈2.9–3.0 nats). Validation loss flattens from epoch 5 onward, showing no further improvement despite continued reduction in training loss. The large and non-diminishing train–val gap (≈1.9 nats) confirms severe overfitting,

driven by the greater number of trainable parameters (74.9M) relative to the available training data (≈18,500 samples).

**Summary.** Table 6 quantifies the final loss values and generalisation gaps for each configuration. The Baseline is the only run in which the train–val gap converges to zero, which directly predicts its superior test-set performance.

Table 6: Final epoch loss values and train–validation gap. A gap near zero indicates strong generalisation.

| Config | Train loss | Val loss | Gap | Curve behaviour |
|---|---|---|---|---|
| Baseline (frozen) | 3.45 | 3.45 | $\approx 0$ ✓ | Co-converge, healthy |
| Exp-A (2L) | 1.80 | 3.70 | $\approx 1.9$ × | Val spike at epoch 1 |
| Exp-B (3L) | 1.10 | 3.00 | $\approx 1.9$ × | Val flat from epoch 5 |

### 6.3 Qualitative Results

Figure 5 presents representative inference examples from the VizWiz test set produced by the Baseline model.

**Success cases** include: (1) yes/no questions answered correctly with high confidence, (2) `unanswerable` predictions on genuinely ambiguous or blurry inputs, and (3) object identification on relatively clear images.

**Failure cases** include: number queries on blurry labels, ambiguous spatial references, and cases where the model generates a plausible but incorrect answer rather than predicting `unanswerable`—a known challenge of the VizWiz dataset [Gurari et al., 2018].

## 7 Analysis and Discussion

### 7.1 Overfitting Analysis

The Baseline configuration is the only experimental run that avoids overfitting, exhibiting a near-zero train–validation gap throughout training (both converging to $\approx 3.45$). By contrast, Exp-A and Exp-B both sustain a persistent gap of $\approx 1.9$ loss units despite dropout $= 0.42$. We identify three compounding factors specific to the unfreezing variants:

1. **Absence of learning rate warmup.** Without a warmup phase, the unfrozen ViT layers receive large gradient updates from the high initial decoder loss ($\approx 4.0$ at epoch 1 in Exp-A), disrupting pretrained CLIP representations before the decoder has stabilised. The Baseline is immune to this effect because its encoder weights are never modified.

2. **Data-deficient fine-tuning regime.** With $\approx$ 18,500 training samples and 14–22 million additional trainable parameters introduced by the selective unfreezing, the ratio of samples to new parameters is $\sim 10^{-3}$—well below what is typically required for stable convergence [**?**]. The Baseline's 53.3M trainable parameters are confined entirely to the decoder and contribute directly to the answer generation objective, avoiding this mismatch.

3. **Decoder capacity mismatch.** The LSTM decoder's multiplicative gating mechanism provides only a static, input-independent conditioning signal. A Transformer decoder with cross-attention would allow each generated a token to attend dynamically to the image and the question features, likely reducing training loss more efficiently while generalising better across all configurations.

### 7.2 Why Frozen CLIP Outperforms Selective Unfreezing

The ablation results contradict the common intuition that fine-tuning additional layers always improves task performance. Three factors explain the reversal in this setting.

First, CLIP ViT-B/32 was pretrained on 400 million image–text pairs using a contrastive objective that already aligns visual and linguistic representations in a shared embedding space [**?**]. This alignment closely mirrors the demands of VQA, making the domain adaptation unnecessary for a dataset of VizWiz's scale.

Second, the catastrophic forgetting observed in Exp-A and Exp-B (validation loss spike to $\approx$ 4.0 at epoch 1) degrades the pretrained feature geometry precisely when the decoder most needs stable conditioning signals.

Third, the Baseline's co-convergent loss curves confirm that frozen CLIP features are *representationally sufficient*: the decoder learns to map a fixed, high-quality embedding space onto the VizWiz answer distribution without requiring the encoder to shift.

### 7.3 Comparison with Reference Baselines

The Baseline result (VQA Accuracy = 0.567) substantially exceeds non-fine-tuned reference models (Q+I: 0.137, Q+I+A: 0.145), confirming that CLIP's pretrained visual–linguistic representations provide a strong foundation for generative VQA. The result also reverses the gap with VizWiz fine-tuned models from the original benchmark (0.465–0.469), which we attribute primarily to CLIP's superior visual features compared to the VGG/ResNet features used in those baselines.

The remaining gap with BLIP-2 ($\sim$ 0.60–0.65) reflects the substantially larger model capacity and pretraining data of that system, and is expected, given our design constraints.

### 7.4 Limitations

- **No learning rate warmup.** The most actionable limitation identified by this study is the absence of a warmup scheduler for unfreezing experiments. A linear warmup over 3–5 epochs would likely prevent catastrophic forgetting and may allow Exp-A or Exp-B to match or exceed the Baseline.

- **No data augmentation.** We do not apply image augmentation (blur, rotation, low-light simulation) to better match VizWiz's degraded image distribution during training. Domain-specific augmentation could further improve generalisation for all configurations.

- **LSTM decoder weakness.** The multiplicative gating mechanism provides only a static, input-independent conditioning signal. Cross-attention (as in BLIP-2's Q-Former [Li et al., 2023]) would allow dynamic, query-dependent attention to visual features and is the most impactful architectural upgrade identified by this work.

- **Unanswerable handling.** The model learns to predict `unanswerable` implicitly through training supervision, without an explicit binary classifier head. A dedicated confidence-based abstention mechanism could improve precision on this class, which constitutes $\approx 25\%$ of VizWiz samples.

- **Compute constraints.** Full training on M1 Pro required $\approx$ 8–9 hours per configuration at the effective batch sizes used. Hyperparameter search across learning rate, warmup length, and dropout was therefore limited to the configurations reported in this study.

## 8 Ablation Study

We evaluated selective CLIP fine-tuning via an ablation study across three configurations that differed only in the unfrozen ViT layers, keeping all other hyperparameters fixed. Table 7 summarises the training setup and test performance.

Table 7: Ablation study results across three experimental configurations. **Bold** denotes the best value in each metric column. "Eff. batch" refers to the effective batch size after gradient accumulation.

| Config | Training Setup | | | Loss (final) | | Test Metrics | | |
|---|---|---|---|---|---|---|---|---|
| | Unfreeze | Batch | Eff. batch | Train | Val | VQA Acc.↑ | BLEU-1↑ | F1↑ |
| Baseline | 0 layers | 180 | 180 | 3.45 | 3.45 | **56.70%** | **48.18%** | **48.77%** |
| Exp-A | 2 layers | 96 | 192 | 1.80 | 3.70 | 54.23% | 45.48% | 45.88% |
| Exp-B | 3 layers | 64 | 192 | 1.10 | 3.00 | 54.13% | 43.93% | 44.07% |

The results reveal a counter-intuitive finding: freezing the entire CLIP backbone (Baseline) consistently outperforms partial fine-tuning on all four test metrics.

## 9 Conclusion

We presented a generative Visual Question Answering system for the VizWiz dataset, combining CLIP's pretrained dual encoders with a lightweight LSTM decoder trained end-to-end via teacher forcing. According to the ablation study— frozen encoder (Baseline), selective unfreezing of the last two and three ViT layers (Exp-A, Exp-B) — we investigated whether adapting CLIP's visual representations to VizWiz's challenging imagery improves downstream performance. Contrary to our initial hypothesis, the fully **frozen** Baseline consistently outperformed both selective fine-tuning variants on all reported metrics (VQA Accuracy, BLEU-1, SQuAD F1). Our best configuration achieves a **VQA Accuracy of 0.567**, **BLEU-1 of 0.482**, and **SQuAD F1 of 48.77**, surpassing fine-tuned VQA-specialised models from the original VizWiz benchmark [Gurari et al., 2018] by approximately 10 percentage points, while requiring only a fraction of the architectural complexity of state-of-the-art systems such as BLIP-2 [Li et al., 2023].

We have found that selective unfreezing without a warmup schedule caused *catastrophic forgetting* during the first training epoch—evidenced by a sharp validation loss spike to $\approx 4.0$ nats in Exp-B—and led to persistent train–validation gaps of $\approx 1.9$ nats in both unfreezing variants. The Baseline, by contrast, exhibited co-convergent training and validation loss ($\approx 3.45$ nats each), a near-zero generalisation gap, and the healthiest overall training dynamics of the three runs. We attribute the superiority of the frozen configuration to three compounding factors: (1) catastrophic forgetting amplified by the absence of learning rate warmup, (2) a data-deficient regime in which $\approx 18{,}500$ training samples are insufficient to fine-tune 14–22 million additional parameters, and (3) the representational sufficiency of CLIP features pretrained on 400 million image–text pairs for the VQA alignment task.

**Future work.** First, incorporating a *linear warmup scheduler* over the first 3–5 epochs would reduce the risk of catastrophic forgetting and may allow selective fine-tuning to close the performance gap with the frozen Baseline.

Second, replacing the LSTM decoder with a lightweight *cross-attention* Transformer decoder (2–4 layers) would allow each generated token to attend directly to image and question features, addressing the fundamental limitation of the current multiplicative gating mechanism.

Third, *adapter-based fine-tuning* [**?**]—inserting small trainable bottleneck modules within frozen CLIP layers—offers a parameter-efficient alternative to full layer unfreezing that is less susceptible to catastrophic forgetting.

Finally, *domain-specific data augmentation* (blur, rotation, low-light simulation) targeting VizWiz's characteristic image degradations could further improve generalisation without increasing model complexity.

## References

Antol, S., Agrawal, A., Lu, J., Mitchell, M., Batra, D., Zitnick, C. L., & Parikh, D. (2015). *VQA: Visual Question Answering*. In Proceedings of ICCV, 2015.

Anderson, P., He, X., Buehler, C., Teney, D., Johnson, M., Gould, S., & Zhang, L. (2018). *Bottom-Up and Top-Down Attention for Image Captioning and Visual Question Answering*. In Proceedings of CVPR, 2018.

Houlsby, N., Giurgiu, A., Jastrzebski, S., Morrone, B., de Laroussilhe, Q., Gesmundo, A., Attariyan, M., & Gelly, S. (2019). *Parameter-Efficient Transfer Learning for NLP*. Proceedings of the 36th International Conference on Machine Learning (ICML 2019), PMLR 97, pp. 2790–2799.

Dosovitskiy, A., Beyer, L., Kolesnikov, A., et al. (2021). *An Image is Worth 16x16 Words: Transformers for Image Recognition at Scale*. In Proceedings of ICLR, 2021.

Goyal, Y., Khot, T., Summers-Stay, D., Batra, D., & Parikh, D. (2017). *Making the V in VQA Matter: Elevating the Role of Image Understanding in Visual Question Answering*. In Proceedings of CVPR, 2017.

Gurari, D., Li, Q., Stangl, A. J., Guo, A., Lin, C., Grauman, K., Luo, J., & Bigham, J. P. (2018). *VizWiz Grand Challenge: Answering Visual Questions from Blind People*. In Proceedings of CVPR, 2018.

Hochreiter, S., & Schmidhuber, J. (1997). *Long Short-Term Memory*. Neural Computation, 9(8), 1735–1780.

Holtzman, A., Buys, J., Du, L., Forbes, M., & Choi, Y. (2020). *The Curious Case of Neural Text Degeneration*. In Proceedings of ICLR, 2020.

Li, J., Li, D., Savarese, S., & Hoi, S. (2023). *BLIP-2: Bootstrapping Language-Image Pre-training with Frozen Image Encoders and Large Language Models*. In Proceedings of ICML, 2023.

Li, X., Yin, X., Li, C., et al. (2020). *Oscar: Object-Semantics Aligned Pre-training for Vision-Language Tasks*. In Proceedings of ECCV, 2020.

Lu, J., Yang, J., Batra, D., & Parikh, D. (2016). *Hierarchical Question-Image Co-Attention for Visual Question Answering*. In Advances in Neural Information Processing Systems (NeurIPS), 2016.

Lu, J., Batra, D., Parikh, D., & Lee, S. (2019). *ViLBERT: Pretraining Task-Agnostic Visiolinguistic Representations for Vision-and-Language Tasks*. In Advances in Neural Information Processing Systems (NeurIPS), 2019.

Radford, A., Kim, J. W., Hallacy, C., et al. (2021). *Learning Transferable Visual Models From Natural Language Supervision*. In Proceedings of ICML, 2021.

Shen, S., Li, L. H., Tan, H., et al. (2021). *How Much Can CLIP Benefit Vision-and-Language Tasks?* arXiv preprint arXiv:2107.06383.

Vaswani, A., Shazeer, N., Parmar, N., et al. (2017). *Attention Is All You Need*. In Advances in Neural Information Processing Systems (NeurIPS), 2017.

# A Pipeline Improvements: v1 → v2

Table 8: Engineering improvements from v1 to v2 of our pipeline

| **Component** | **v1 (baseline)** | **v2 (this work)** |
|---|---|---|
| Random seed | Random per run | Fixed = 42 |
| Train/Val split | 99/1 | **99/1** |
| LR scheduling | Double-step (bug) | Lightning auto-step |
| Milestone calc | `int()` float error | `round()` |
| Yes/No label | First annotator | **Majority vote** |
| CLIP unfreeze | All-or-nothing | **Selective last** $N$ |
| LR for CLIP | Uniform | **Layer-wise** ($\times 0.1$) |
| Primary metric | SQuAD EM/F1 | **VQA Accuracy** |
| Gradient accum | None | $K = 2$ or 3 |
| Mixed precision | None | `16-mixed` (GPU) |

# B Full Architecture Specifications

Table 9: CLIP ViT-B/32 architecture specifications

| **Property** | **Value** |
|---|---|
| Input resolution | $224 \times 224 \times 3$ |
| Patch size | $32 \times 32$ |
| # Patches | $7 \times 7 = 49$ |
| Transformer width | 768 |
| Transformer layers | 12 |
| Attention heads | 12 |
| Output dimension | 512 |
| Total parameters | 87.8M |

| **Component** | **Parameters** |
|---|---|
| ViT-B/32 (visual) | 87.8M |
| Text Transformer | 37.8M |
| Token Embedding | 25.3M |
| LayerNorm | 1.0K |
| Decoder (LSTM) | 53.3M |
| **Total** | **204.5M** |
| **Trainable** | **67.8M (33.2%)** |

# C Reproducibility Checklist

- ✓ Random seed fixed to 42 for all experiments.
- ✓ Dataset split deterministic (shuffled with fixed seed before split).
- ✓ Hyperparameters fully specified in Table 4.
- ✓ Pretrained weights from `clip.load("ViT-B/32")`, publicly available.
- ✓ Training framework: PyTorch Lightning 2.6.1.
- ✓ Code available at: [`https://github.com/sonkd/Visual-Question-Answering-on-VizWiz`].

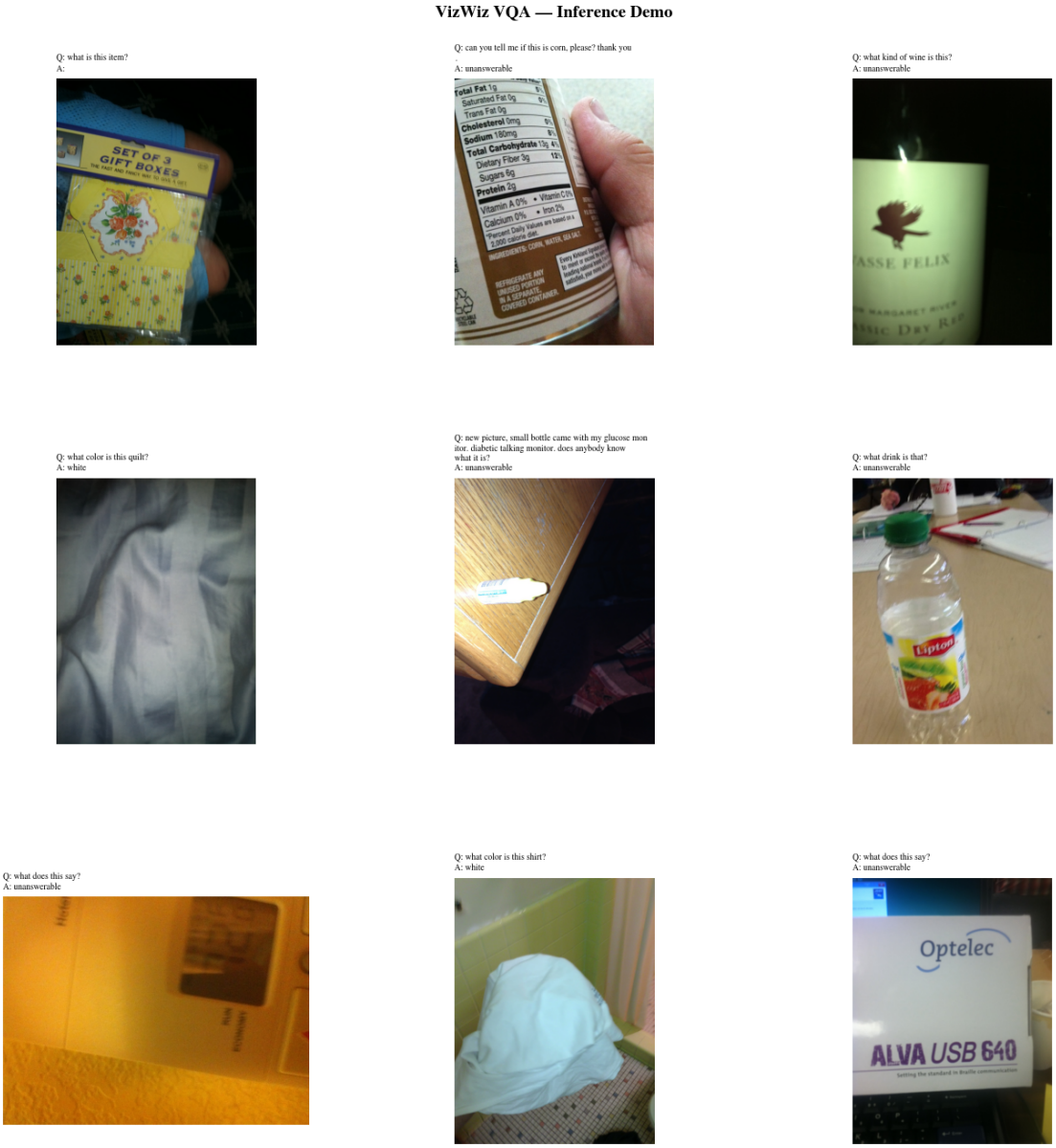


Figure 5: Qualitative results on the VizWiz test set (Baseline model). **Top row**: success cases. **Bottom row**: failure cases. Q = question; A = predicted answer.