Visual Question Answering on VizWiz

A Generative CLIP + LSTM Approach with Selective Fine-tuning

Kim Đình Sơn Mai Hà Đạt Nguyễn Tùng Lương Ninh Văn Nghĩa
Phạm Thanh Nam Phạm Nguyên Khánh Minh

Advanced Deep Learning
Master of Data Science Program

Mar 22, 2026

Table of Contents

1. Executive Summary
2. Introduction
3. Methodology
4. Results
5. Conclusion

Executive Summary

Problem

- VQA on real-world images taken by blind users
- Blurry, rotated, poorly-lit photos
- $\approx 25\%$ questions are unanswerable

Approach

- **Generative** decoder (LSTM)
- **Dual CLIP encoder** (ViT-B/32, frozen)
- **Ablation** across 0, 2, 3 unfrozen ViT layers

Key Contributions

1. Generative VQA pipeline for VizWiz
2. Layer-wise LR ($\times 0.1$) for CLIP fine-tuning
3. **VQA Accuracy** as official metric (vs. SQuAD EM/F1)

Best Result — Frozen Baseline

VQA Accuracy: **0.567**

BLEU-1: **0.482** F1: **48.77**

Frozen CLIP > selective unfreezing

Motivation: Assistive AI for the Visually Impaired

About VizWiz

- 20,000+ photos taken by blind smartphone users
- Questions asked in natural speech, often ambiguous
- Harder than VQA v2 (Antol et al., 2015):

Challenge	VQA v2	**VizWiz**
Image quality	High	Low
Unanswerable	None	27%
Question clarity	Clear	Ambiguous

VizWiz VQA Challenge 2024

Q: "What brand is this?"
A: "unanswerable" (blurry image)

Q: "What color is my shirt?"
A: "blue"

Q: "Is this expired?"
A: "no"

Dataset: VizWiz VQA - Example

Q: Does this foundation have any sunscreen?
A: yes

Q: What is this?
A: 10 euros

Q: What color is this?
A: green

Q: Please can you tell me what this item is?
A: butternut squash red pepper soup

Q: Is it sunny outside?
A: yes

Q: Is this air conditioner on fan, dehumidifier, or air conditioning?
A: air conditioning

Q: What type of pills are these?
A: unsuitable image

Q: What type of soup is this?
A: unsuitable image

Q: Who is this mail for?
A: unanswerable

Q: When is the expiration date?
A: unanswerable

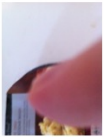

Q: What is this?
A: unanswerable

Q: Can you please tell me what the oven temperature is set to?
A: unanswerable

VizWiz VQA - Example


```
"answerable": 0,
"image": "VizWiz_val_00028000.jpg"
"question": "What is this?",
"answer_type": "unanswerable",
"answers": [
    {"answer": "unanswerable", "an
    {"answer": "chair", "answer_co
    {"answer": "unanswerable", "an
    {"answer": "unanswerable", "an
    {"answer": "unanswerable", "an
    {"answer": "text", "answer_con
    {"answer": "unanswerable", "an
    {"answer": "bottle", "answer_c
    {"answer": "unanswerable", "an
    {"answer": "unanswerable", "an
]
```

Dataset: VizWiz VQA

Data Splits (99/1)

```
Loading datasets...
  [train] 18,470 samples. Source: train.json
  [val]    2,053 samples. Source: train.json
  [test]   4,319 samples. Source: val.json

```

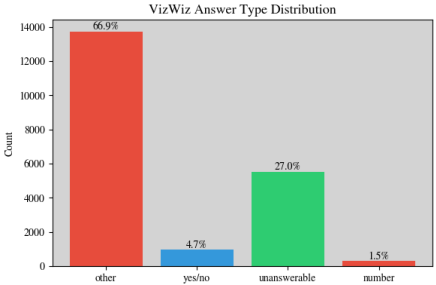

Answer Type Distribution

Annotation Protocol

- **10 annotators** per image-question pair
- Majority vote for `yes/no` labels
- `unanswerable` if > 3 annotators agree
- Stored as `all_answers` for VQA Acc

Key Challenge

Model must learn to **refuse** answering, not hallucinate, for $\approx 27\%$ of inputs.

Problem Definition

Our Task

$$f : (I,\ Q) \longrightarrow A$$

- $I \in \mathbb{R}^{3\times 224\times 224}$: input image
- $Q = (q_1, \ldots, q_T)$: question token sequence, $T \leq 77$
- $A = (a_1, \ldots, a_S)$: answer token sequence (generative output)

Why Generative?

- Classification over fixed vocab cannot handle *unanswerable*
- Predict the unknown question: VizWiz answers are open-ended and non-standardized
- Enables free-form responses

Training Objective Teacher forcing with cross-entropy:

$$\mathcal{L} = -\sum_{t=1}^{S} \log P(a_t \mid a_{<t},\ I,\ Q)$$

OpenAI CLIP Model

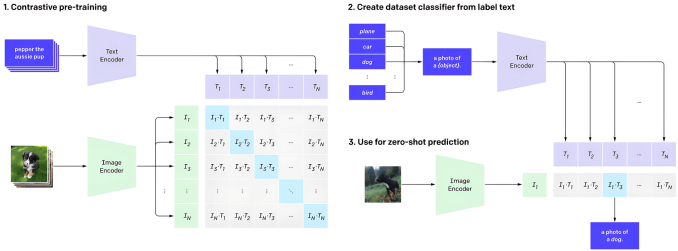

Summary of CLIP model's approach, from Learning Transferable Visual Models From Natural Language Supervision paper

What is contrastive learning?

Imagine you have a main item (the "anchor sample"), a similar item ("positive"), and a different item ("negative sample"). The goal is to make the model understand that the anchor and the positive item are alike, so it brings them closer together in its mind while recognizing that the negative item is different and pushing it away.

Evaluation Metric: VQA Accuracy

Follow Official VizWiz

$$\text{VQA-Acc}(\hat{a}) = \min\left(\frac{\left|\{i : \hat{a} = a_i\}\right|}{3}, 1.0\right)$$

where $\{a_i\}_{i=1}^{10}$ are answers from 10 human annotators.

Interpretation - Fair-play score

- ≥ 3 annotators agree with $\hat{a} \Rightarrow$ score $= 1.0$
- 2 annotators agree $\Rightarrow$ score $= 0.67$
- 1 annotator agrees $\Rightarrow$ score $= 0.33$
- 0 agree $\Rightarrow$ score $= 0$

Why Not SQuAD EM/F1?

- SQuAD designed for extractive QA
- Cannot capture synonym answers ("white" vs. "cream" vs. "off-white")
- EM too strict for generative outputs

Additional metric: BLEU-1 for n-gram overlap evaluation.

Architecture Overview

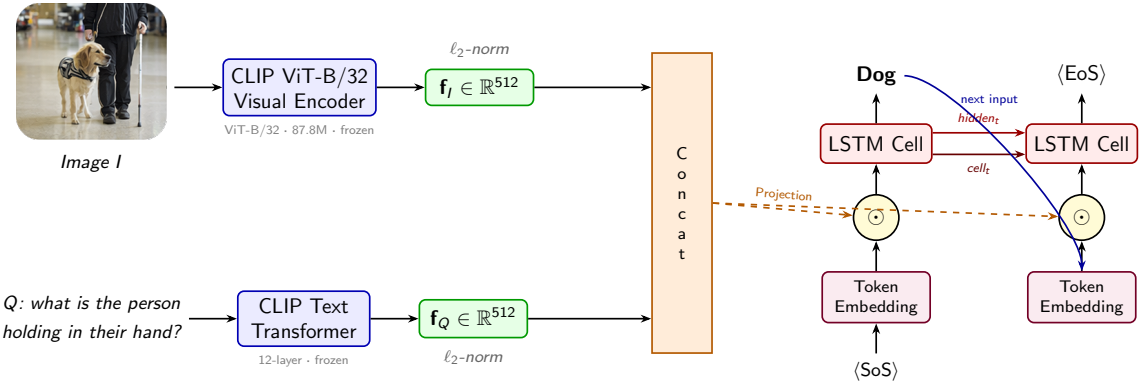

Training Configuration

Hyperparameters

Parameter	Value
Optimizer	AdamW
β	$(0.9,\ 0.98)$, $\epsilon{=}10^{-9}$
LR (decoder)	4.1×10^{-3}
Scheduler	MultiStepLR, $\gamma{=}0.37$
Milestones	$[6, 12, 18, 24, 30]$
Dropout	0.42
Max epochs	36
EarlyStopping	patience $= 8$
Random seed	42 (fixed)

LR Milestone Derivation

Milestones distributed by $\sqrt{T}$:

$$m_k = \text{round}\left(T \cdot \frac{k}{\sqrt{T}}\right), \quad k = 1, \ldots, \lfloor \sqrt{T} \rfloor$$

For $T{=}36$: milestones $= [6, 12, 18, 24, 30]$

Inference: Nucleus Sampling

$$V_p = \arg\min_V \left[\sum_{w \in V} P(w) \geq p \right]$$

Temperature $\tau{=}0.1$, top-$p{=}0.9$

Quantitative Results

Experiment	VQA Acc	BLEU-1	F1
Exp-B (unfreeze 3L)	0.541	0.439	44.07
Exp-A (unfreeze 2L)	0.542	0.455	45.88
Baseline (frozen)	**0.567**	**0.482**	**48.77**

Key Finding

Frozen CLIP encoder **outperforms** both unfreezing variants on all metrics.
Selective unfreezing causes catastrophic forgetting without a warm-up.

Method	Acc	CIDEr	BLEU	METEOR
Q+I [18]	0.137	0.224	0.000	0.078
Q+I+A [24]	0.145	0.237	0.000	0.082
Q+I+BUA [6]	0.134	0.226	0.000	0.077
FT [18]	0.466	0.675	0.314	0.297
FT [24]	0.469	0.691	0.351	0.299
FT [6]	**0.475**	**0.713**	0.359	**0.309**
VizWiz [18]	0.465	0.654	0.353	0.298
VizWiz [24]	0.469	0.661	0.356	0.302
VizWiz [6]	0.469	0.675	**0.396**	0.306

Performance of VQA methods on the VizWiz test data: https://arxiv.org/pdf/1802.08218

Loss Curves

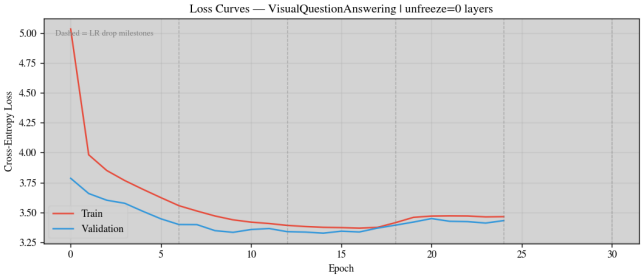

Observations

- Train loss decreases steadily
- Val loss plateaus after epoch 3
- Gap $\approx$ 1.54 suggests an overfitting.
- LR drops do not rescue val loss

Possible Causes

- Val set too small (2,053)
- High distribution variance in VizWiz
- Decoder capacity mismatch

Conclusion

Contributions

1. **Generative VQA pipeline** on VizWiz — handles unanswerable queries natively
2. **Ablation study** (0, 2, 3 unfrozen layers) reveals frozen CLIP generalises best
3. **VQA Accuracy** as primary metric — correct evaluation for this task

Best Result

Baseline (frozen CLIP): VQA Acc = 0.567, BLEU-1 = 0.482
Exceeds VizWiz fine-tuned baselines by ≈10pp

Limitations & Future Work

- **No LR warmup** — main cause of catastrophic forgetting in Exp-A/B
- LSTM decoder — cross-attention would be stronger
- No domain augmentation (blur, rotation)
- Compute constraint: single M1 Pro run per config

Appendix A: Pipeline Improvements (v1 $\rightarrow$ v2)

Component	**v1 (baseline)**	**v2 (this work)**
Random seed	Random per run	Fixed $= 42$
Train/Val split	99/1	**90/10**
LR scheduling	Double-step (bug)	Lightning auto-step
Milestone calc	`int()` — float error	`round()`
Yes/No label	First annotator	**Majority vote**
CLIP unfreeze	All-or-nothing	**Selective last** N
LR for CLIP	Uniform	**Layer-wise** ($\times 0.1$)
Primary metric	SQuAD EM/F1	**VQA Accuracy**
Gradient accum	None	K=2 or 3
Mixed precision	None	`16-mixed` (GPU)

Appendix B: Full Architecture Specifications

CLIP ViT-B/32

Property	**Value**
Input size	$224 \times 224 \times 3$
Patch size	32×32
# Patches	$7 \times 7 = 49$
Width	768
Layers	12
Heads	12
Output dim	512
Total params	87.8M

Model Parameter Summary

Component	**Params**
ViT-B/32 (visual)	87.8M
Text Transformer	37.8M
Token Embedding	25.3M
LayerNorm	1.0K
Decoder (LSTM)	53.3M
Total	**204.5M**
Trainable	**67.8M** (33.2%)

Thank You

Questions & Discussion

References:
`VizWiz VQA Challenge:` vizwiz.org

`CLIP:` Radford et al., ICML 2021
`ViT:` Dosovitskiy et al., ICLR 2021
`Attention:` Vaswani et al., NeurIPS 2017
`Bahdanau Attention:` Bahdanau et al., ICLR 2015