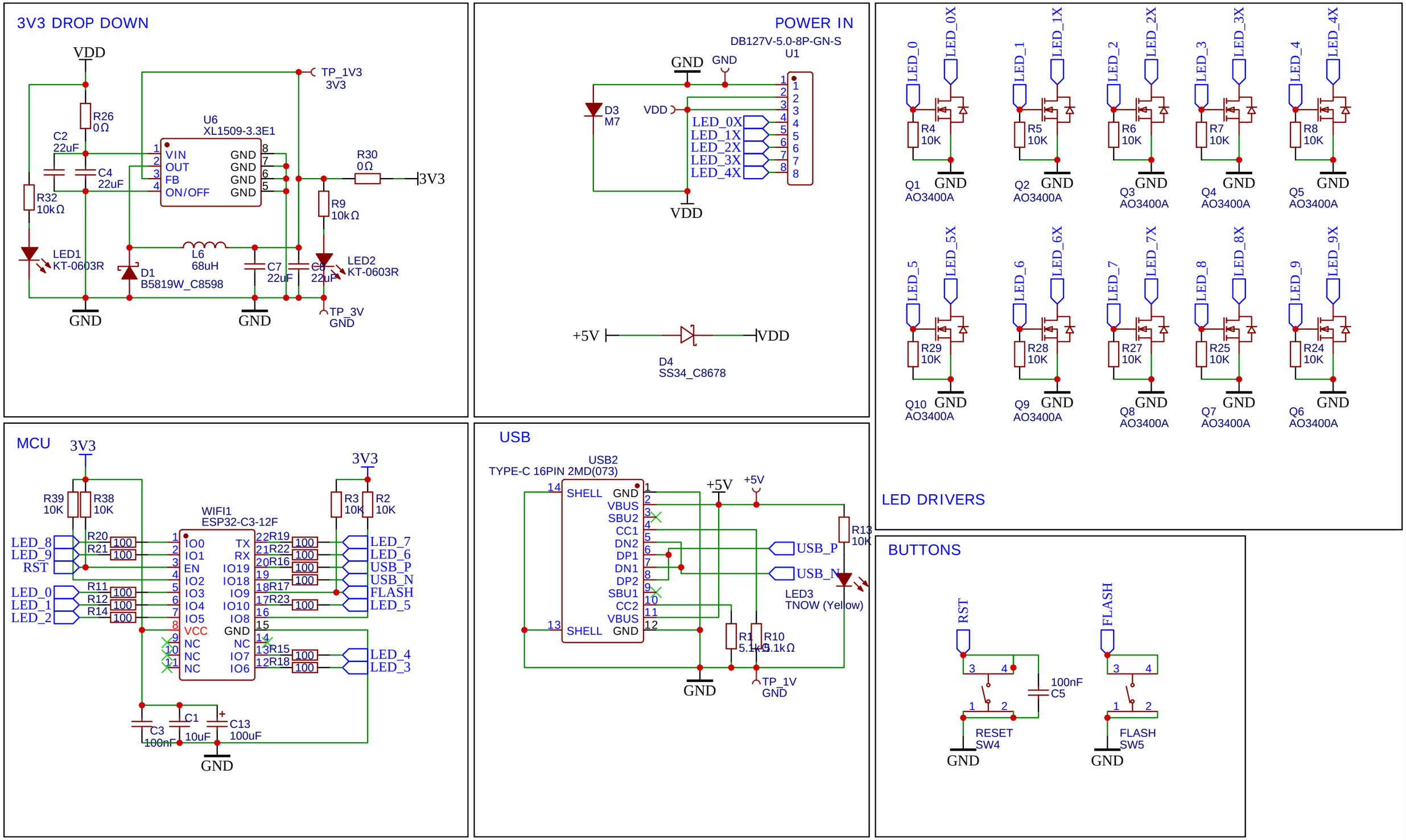

TITLE: ESP32 Luma Drive

REV: A

Company: Sonocotta

Sheet: 1/2

Date: 2024-11-01

Drawn By: andriy@sonocotta.com

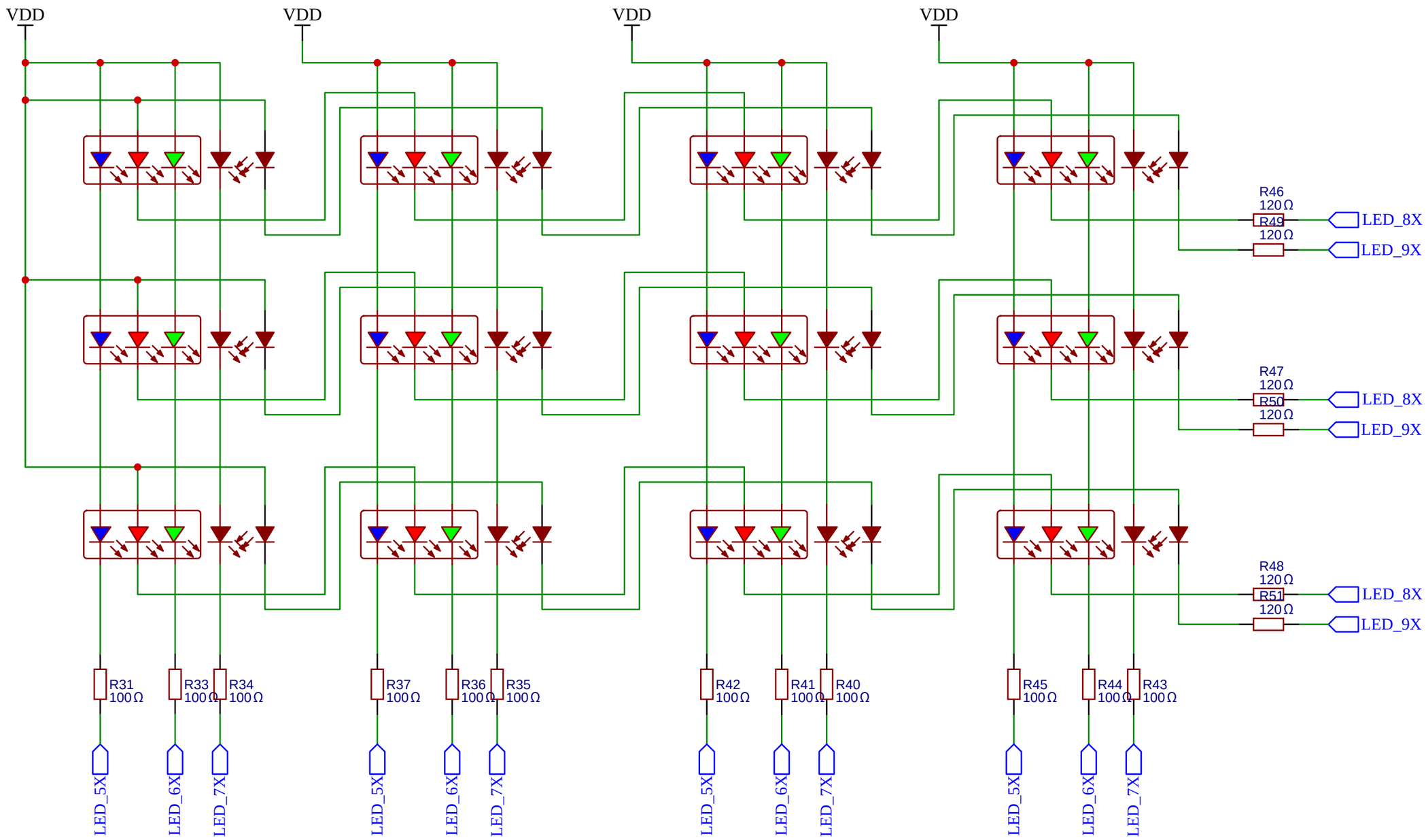

TITLE: ESP32 Luma Drive		REV: A
EasyEDA	Company: Sonocotta	Sheet: 2/2
	Date: 2024-11-02 Drawn By: andriy@sonocotta.com	