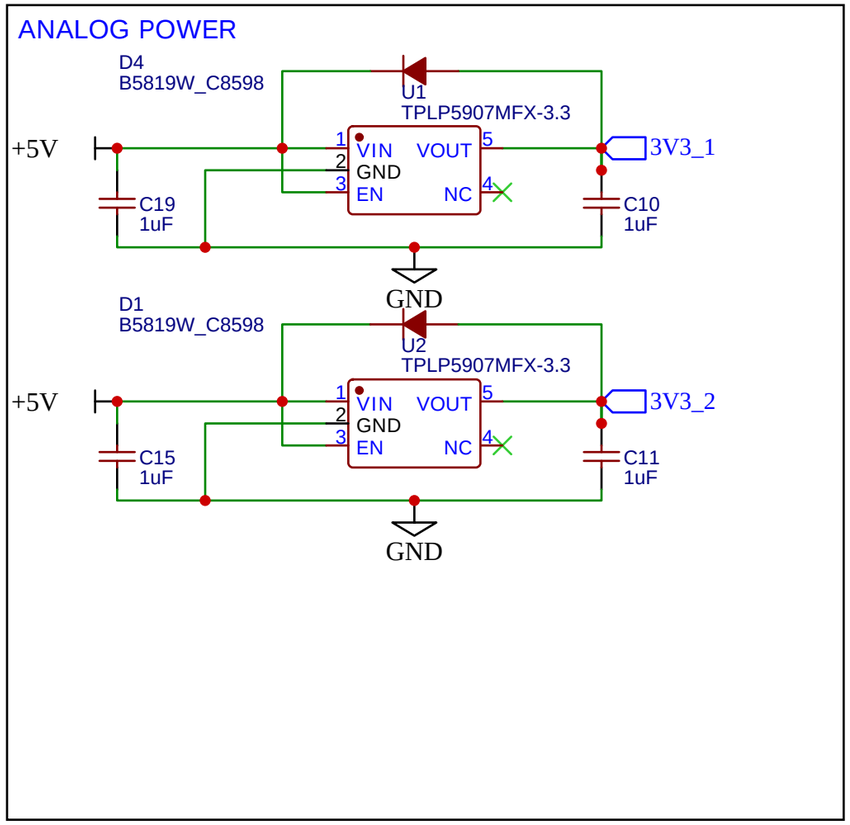

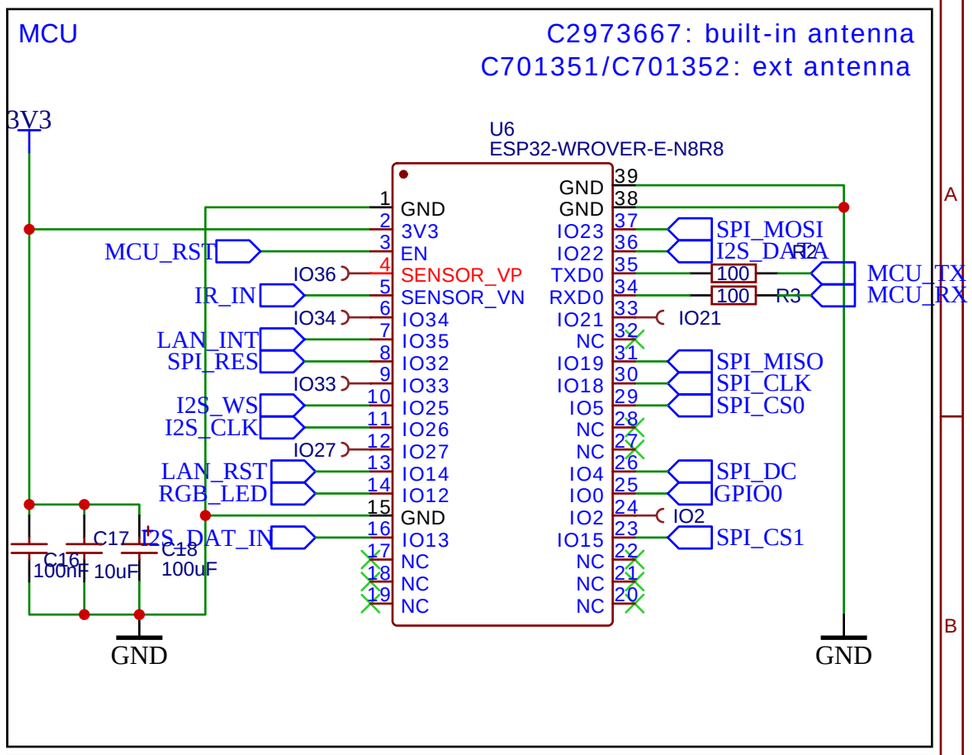

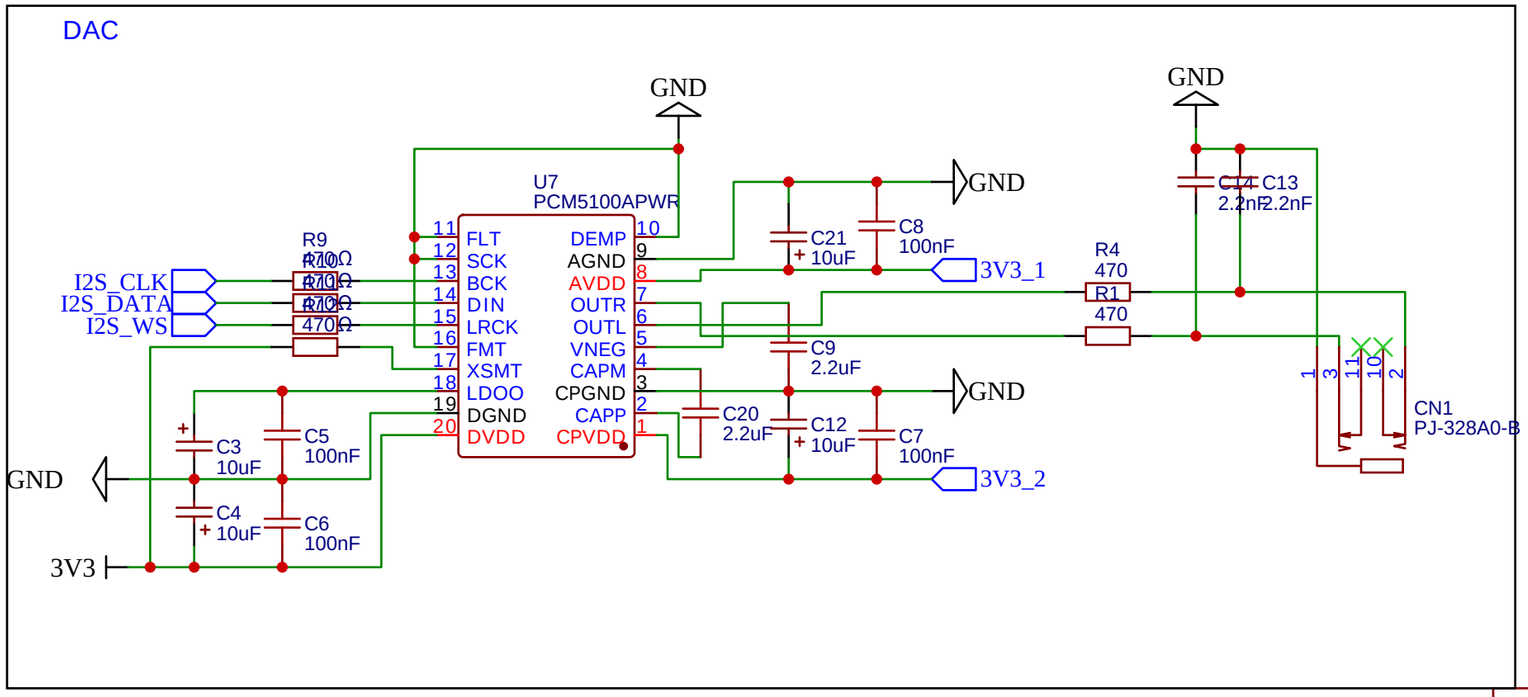

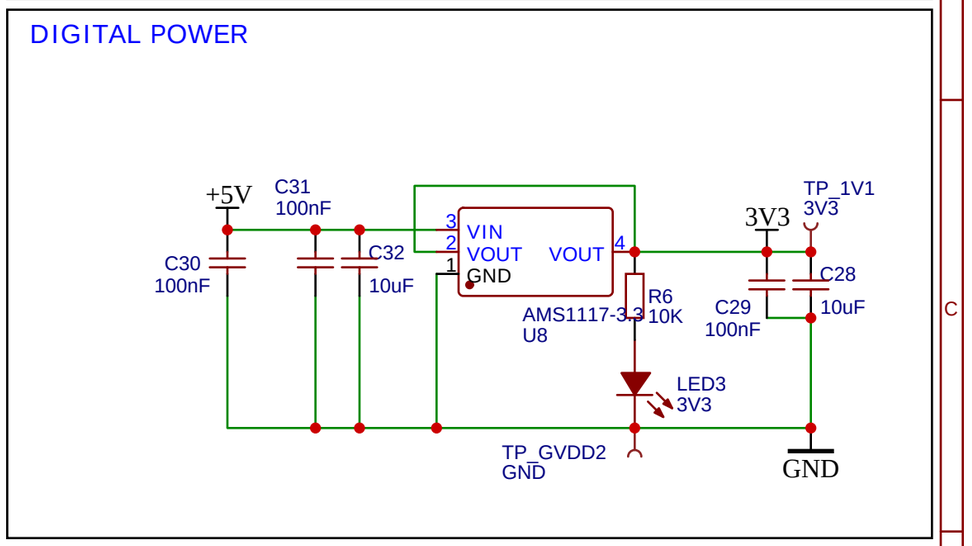

TITLE: HiFi ESP32 (Gen 2)		REV: F3
嘉立创EDA	Company: Sonocotta	Sheet: 1/2
	Date: 2025-09-20	Drawn By: andriy@sonocotta.com

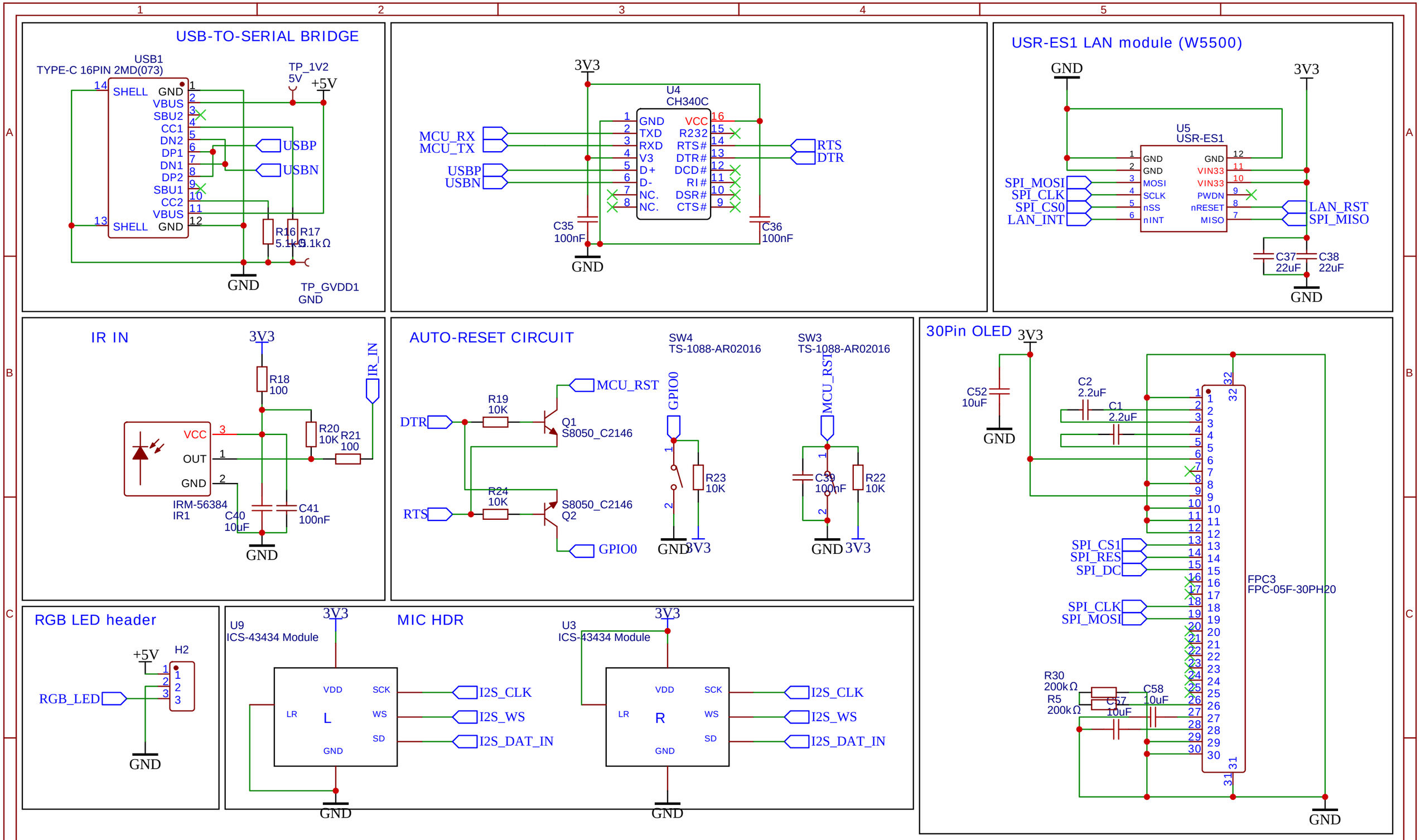

TITLE: HiFi ESP32 (Gen 2)		REV: F3
EasyEDA	Company: Sonocotta	Sheet: 2/2
	Date: 2025-09-20 Drawn By: andriy@sonocotta.com	