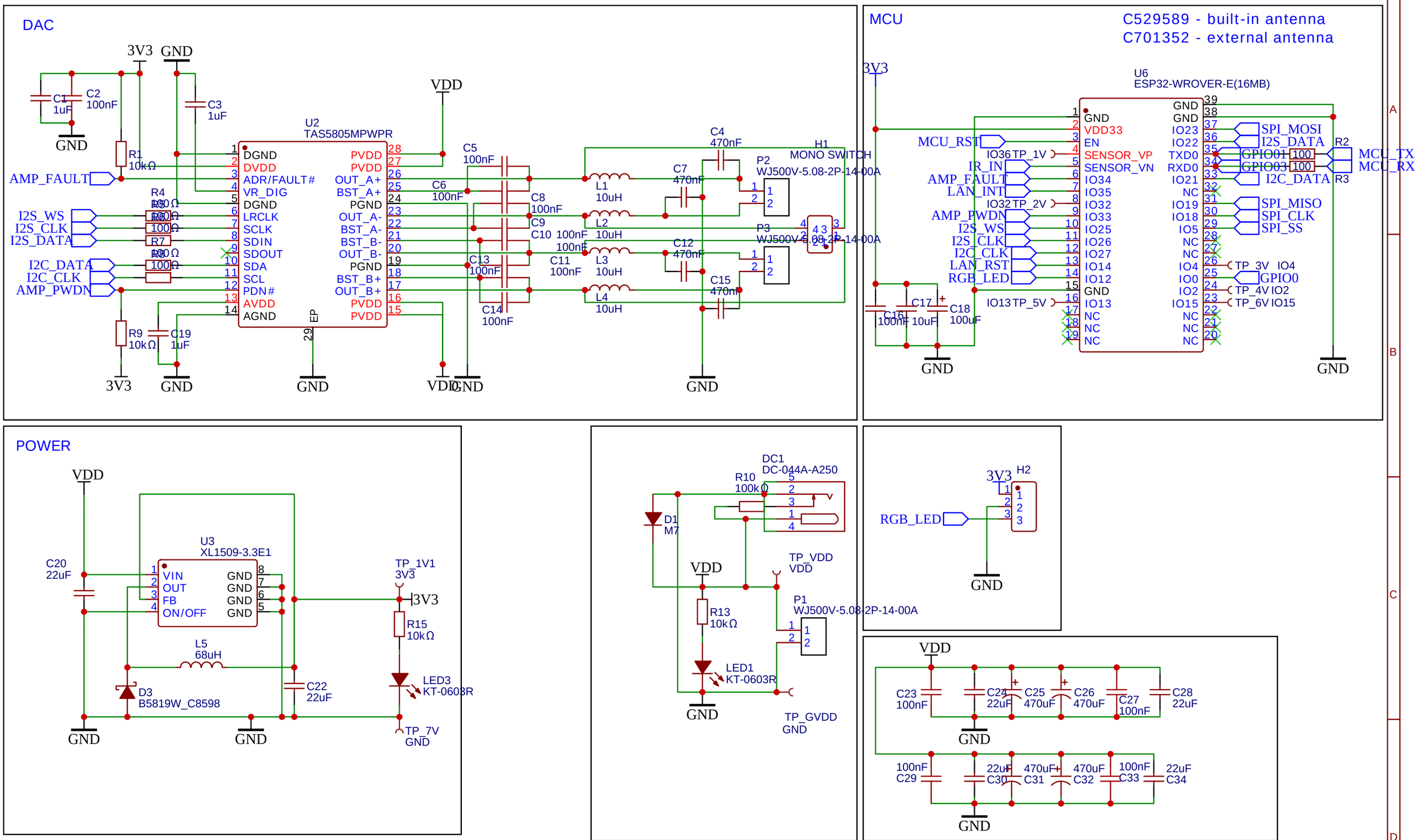

TITLE: Louder-ESP32	REV: H3
嘉立创EDA Company: Sonocotta	Sheet: 1/2
Date: 2024-10-03 Drawn By: andriy@sonocotta.com	

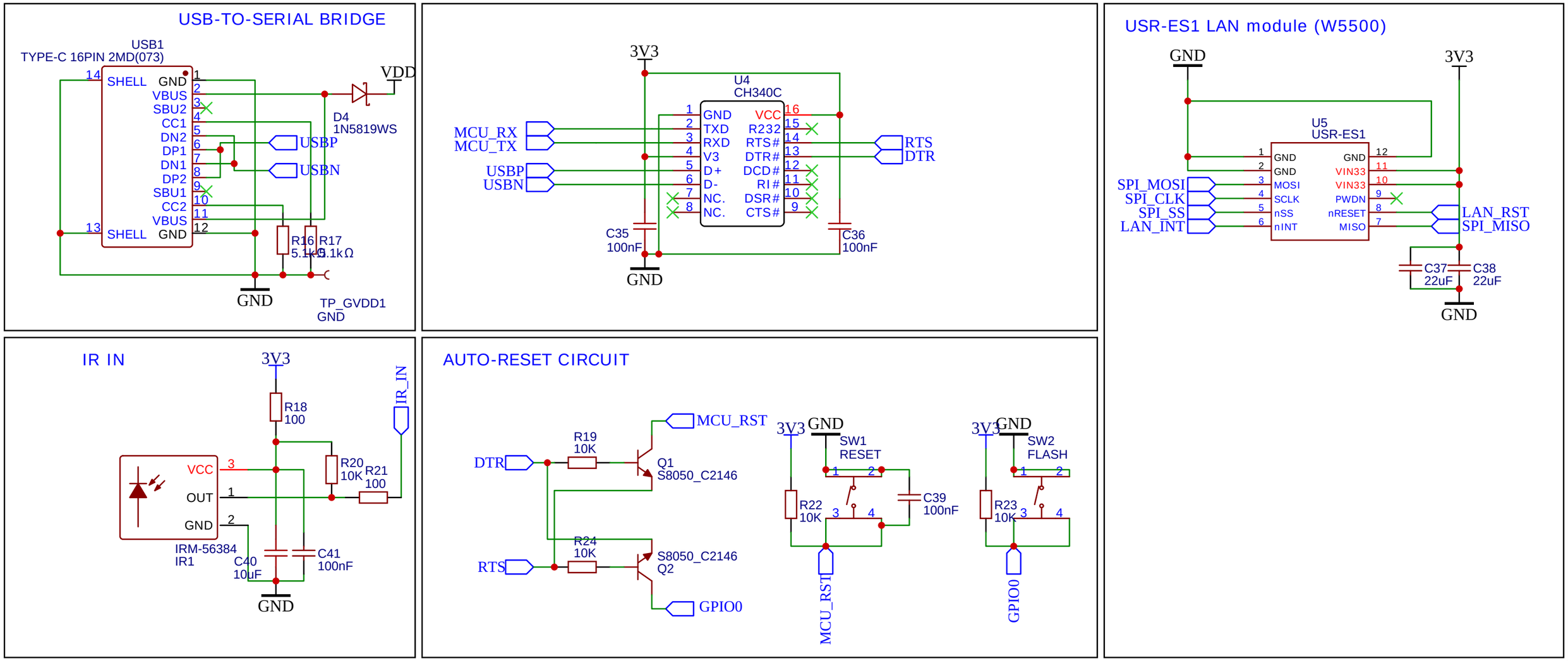

TITLE: Louder-ESP32		REV: H3
EasyEDA	Company: Sonocotta	Sheet: 2/2
	Date: 2024-10-03 Drawn By: andriy@sonocotta.com	