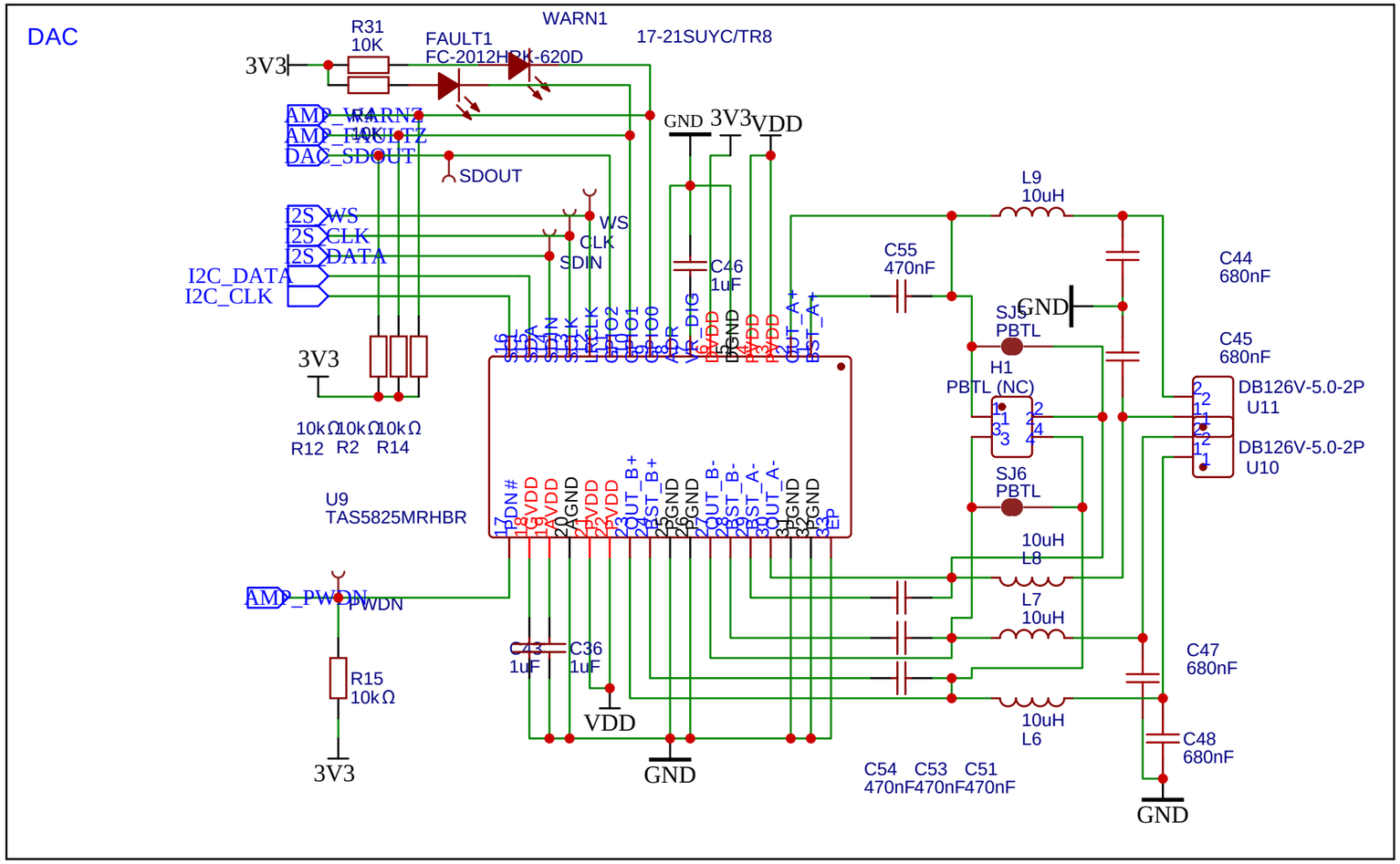

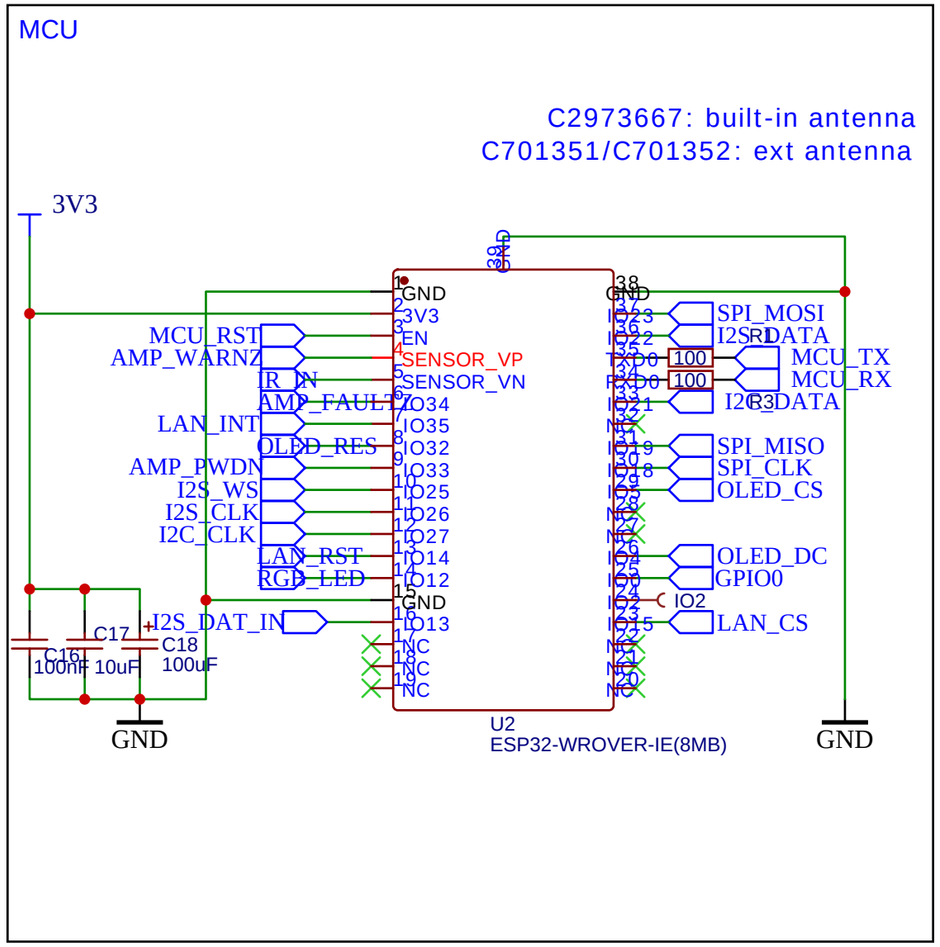

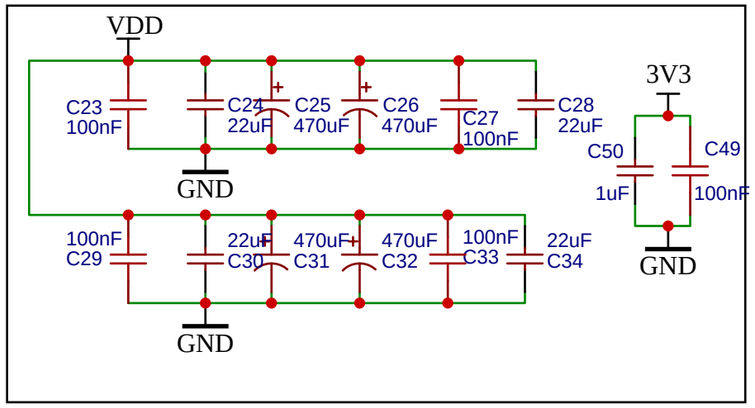

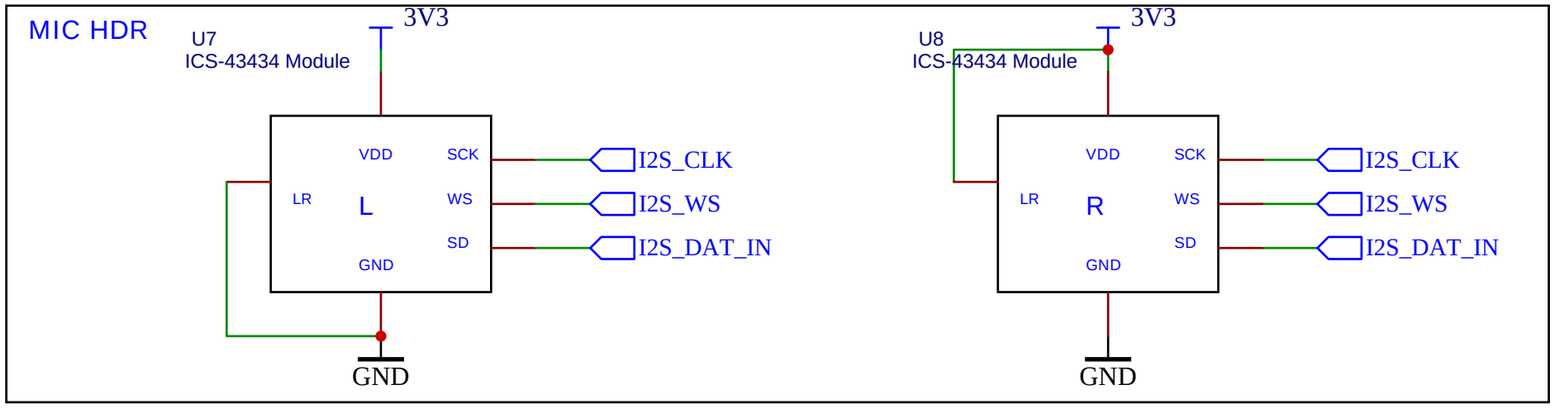

TITLE: Louder ESP32 Plus (TAS5825M)		REV: B
嘉立创EDA	Company: Sonocotta	Sheet: 1/2
	Date: 2026-01-03	Drawn By: andriy@sonocotta.com

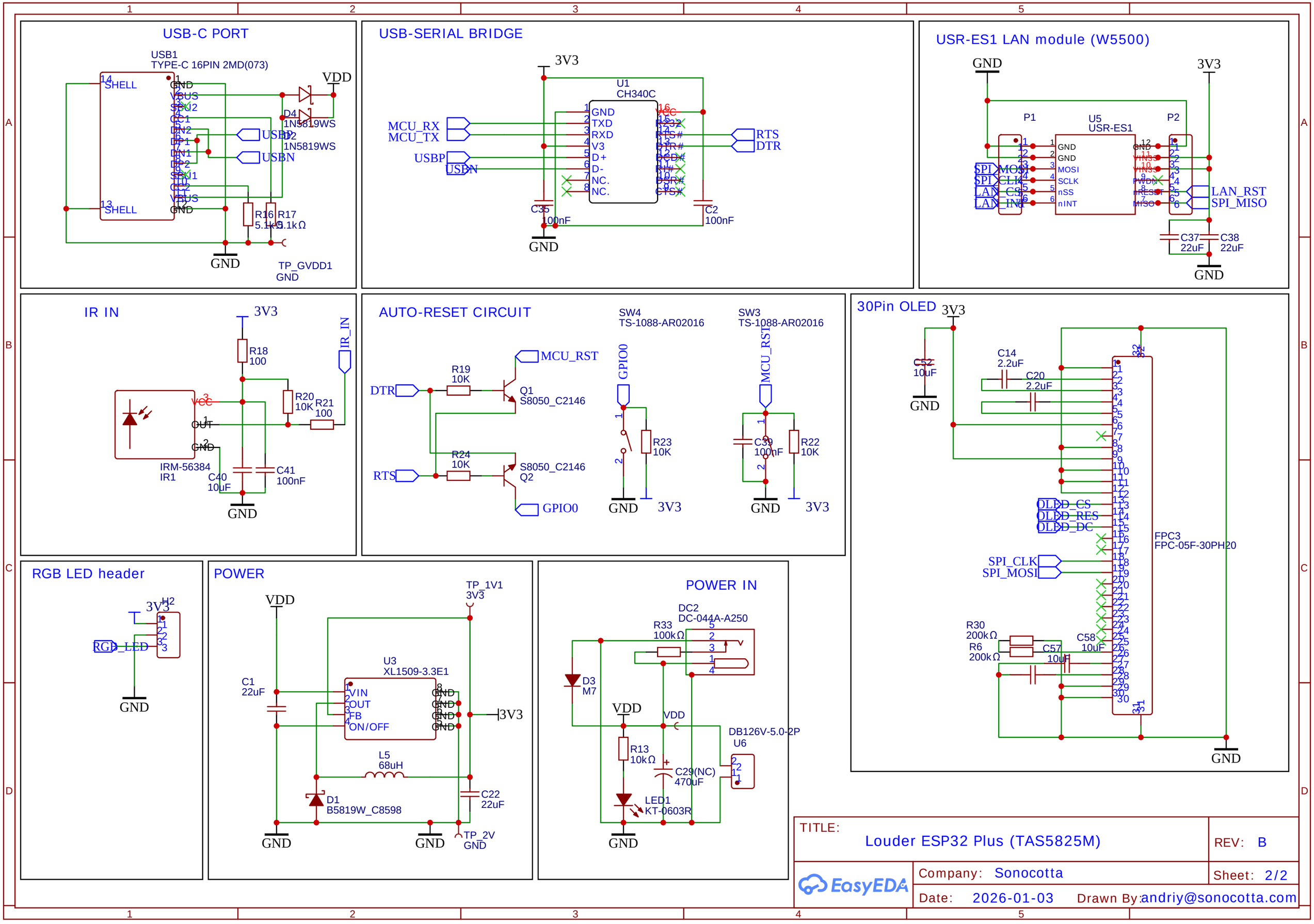
USB-C PORT
USB1
TYPE-C 16PIN 2MD(073)
SHELL
GND
VBUS
SBU2
CC1
DN2
DP1
DN1
DP2
SBU1
CC2
VBUS
GND
SHELL
VDD
D4
1N5819WS
D2
1N5819WS
USBP
USBN
R16
5.1kΩ
R17
5.1kΩ
GND
TP_GVDD1
GND
USB-SERIAL BRIDGE
3V3
U1
CH340C
GND
TXD
RXD
V3
D+
D-
NC.
NC.
VCC
RTS
DTR
MCU_RX
MCU_TX
USBP
USBN
C35
100nF
C2
100nF
GND
USR-ES1 LAN module (W5500)
GND
3V3
P1
U5
USR-ES1
P2
GND
GND
MOSI
SCLK
nSS
nINT
SPI_MOSI
SPI_CLK
LAN_CS
LAN_INT
LAN_RST
SPI_MISO
C37
22uF
C38
22uF
GND
IR IN
3V3
R18
100
IR_IN
VCC
OUT
GND
R20
10K
R21
100
IRM-56384
IR1
C40
10uF
C41
100nF
GND
AUTO-RESET CIRCUIT
SW4
TS-1088-AR02016
SW3
TS-1088-AR02016
MCU_RST
R19
10K
DTR
Q1
S8050_C2146
R24
10K
RTS
S8050_C2146
Q2
GPIO0
GPIO0
R23
10K
GND
3V3
MCU_RST
C39
100nF
R22
10K
GND
3V3
30Pin OLED
3V3
C52
10uF
GND
C14
2.2uF
C20
2.2uF
OLED_CS
OLED_RES
OLED_DC
FPC3
FPC-05F-30PH20
SPI_CLK
SPI_MOSI
R30
200kΩ
R6
200kΩ
C57
10uF
C58
10uF
GND
RGB LED header
3V3
H2
RGB_LED
GND
POWER
VDD
TP_1V1
3V3
U3
XL1509-3.3E1
C1
22uF
VIN
OUT
FB
ON/OFF
GND
3V3
L5
68uH
D1
B5819W_C8598
C22
22uF
GND
GND
TP_2V
GND
POWER IN
DC2
DC-044A-A250
R33
100kΩ
D3
M7
VDD
VDD
R13
10kΩ
C29(NC)
470uF
LED1
KT-0603R
DB126V-5.0-2P
U6
GND
TITLE:
Louder ESP32 Plus (TAS5825M)
REV: B
EasyEDA
Company: Sonocotta
Sheet: 2/2
Date: 2026-01-03
Drawn By:andriy@sonocotta.com