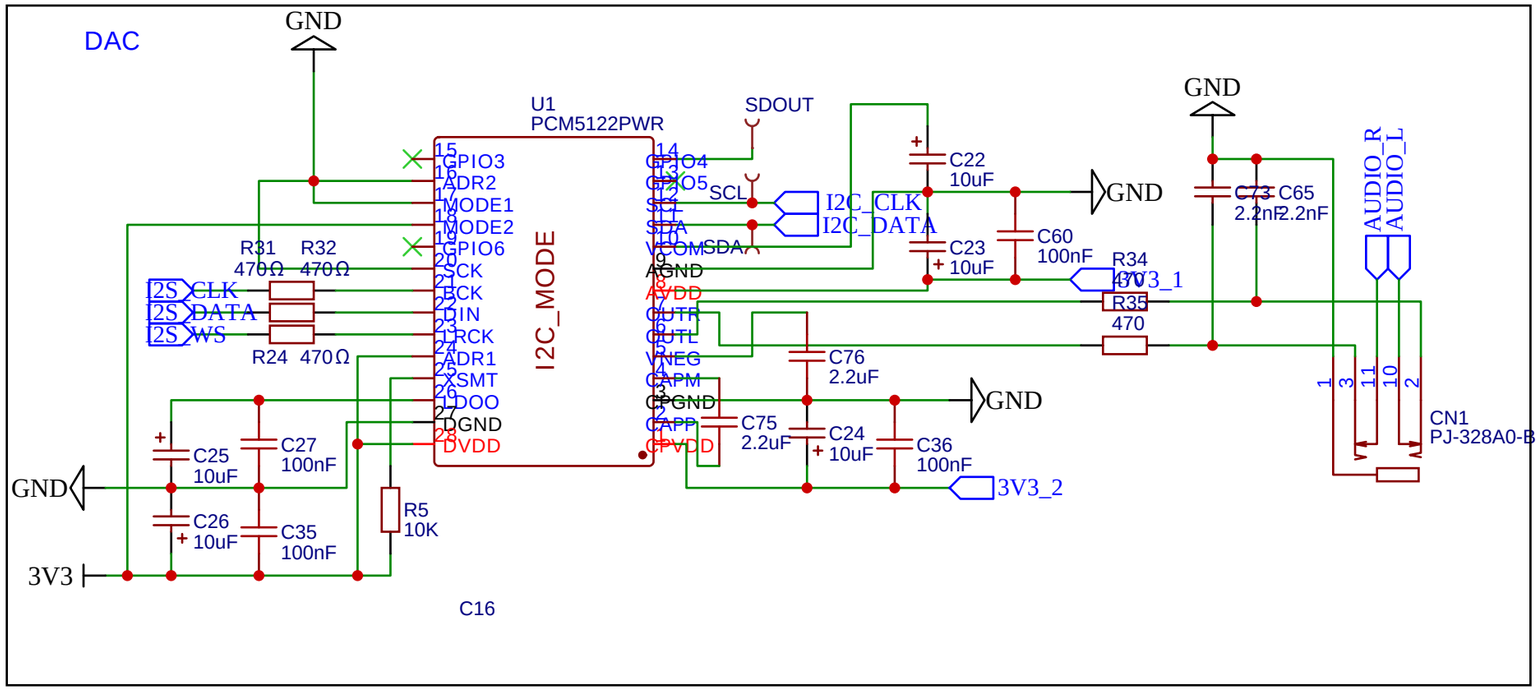


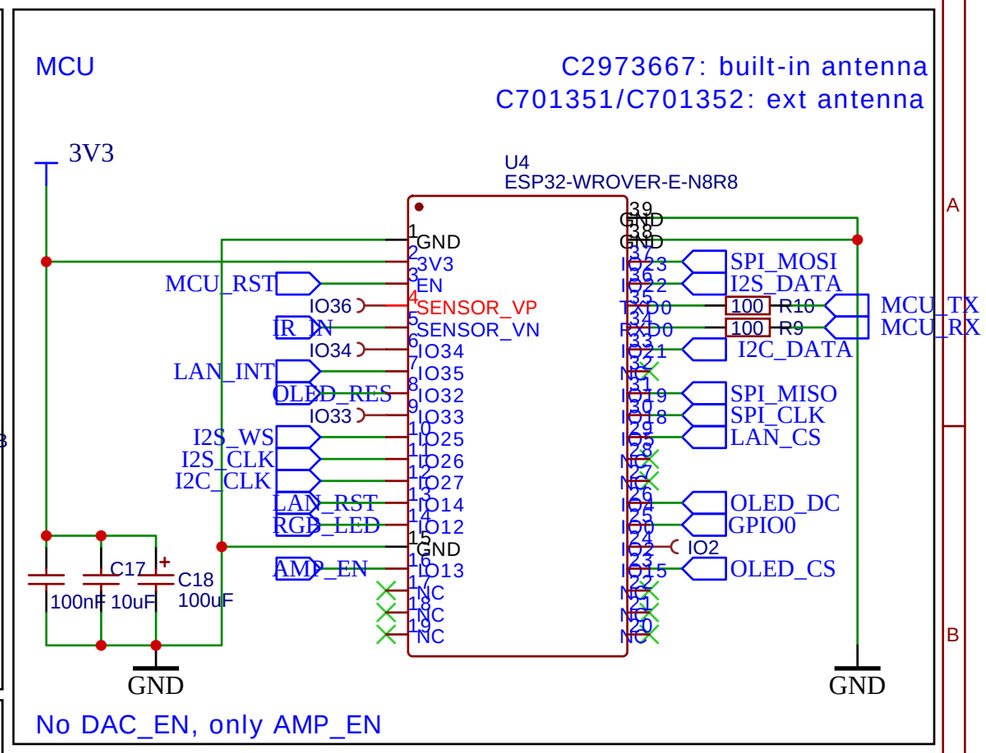


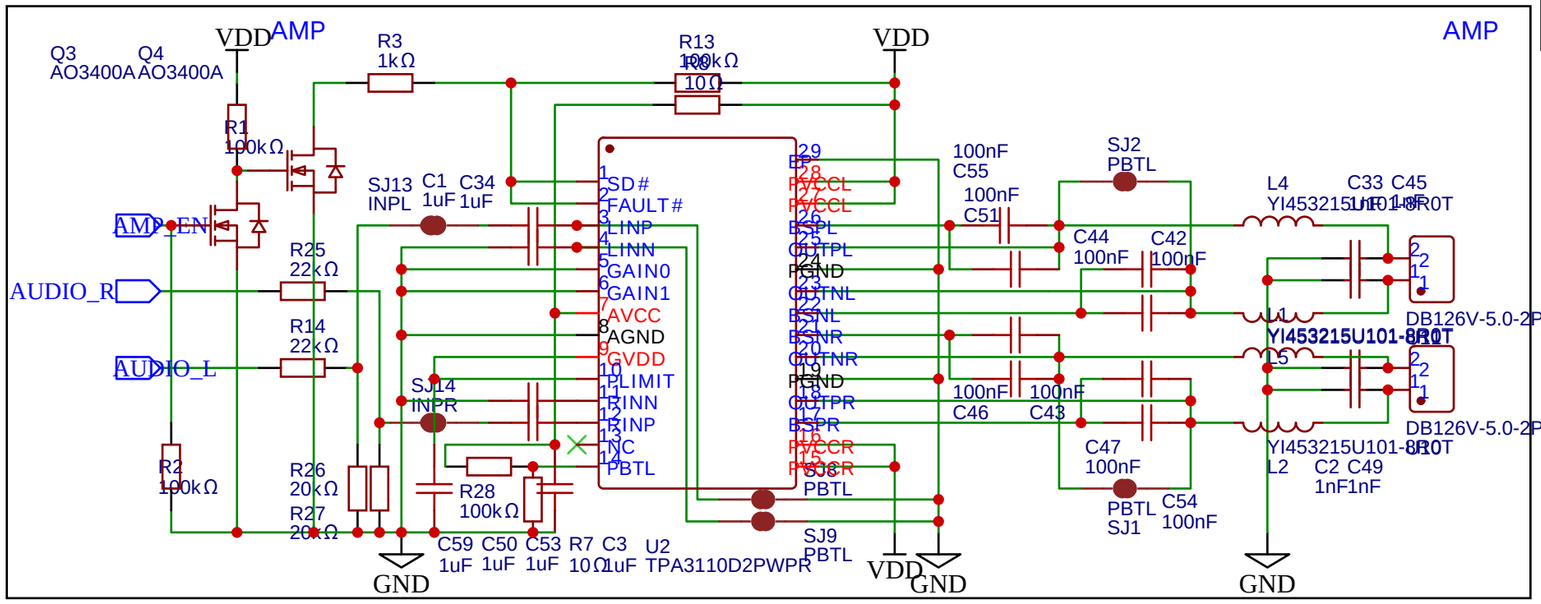


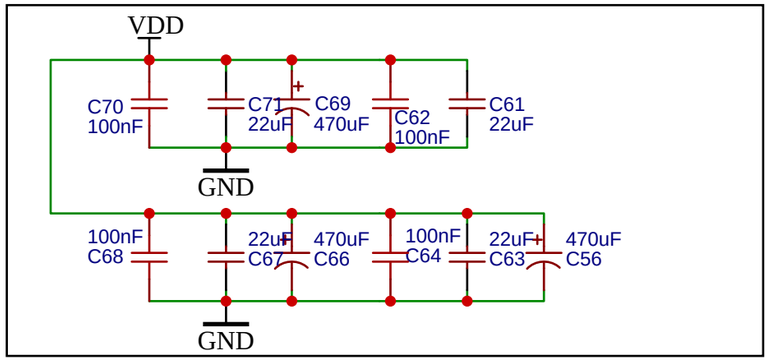


| | | |
|---|---|---|
| TITLE: Amped ESP32 Plus (PCM5122 + TPA3110) | | REV: B |
| 嘉立创EDA | Company: Sonocotta | Sheet: 1/3 |
| | Date: 2026-01-03 Drawn By: andriy@sonocotta.com | |

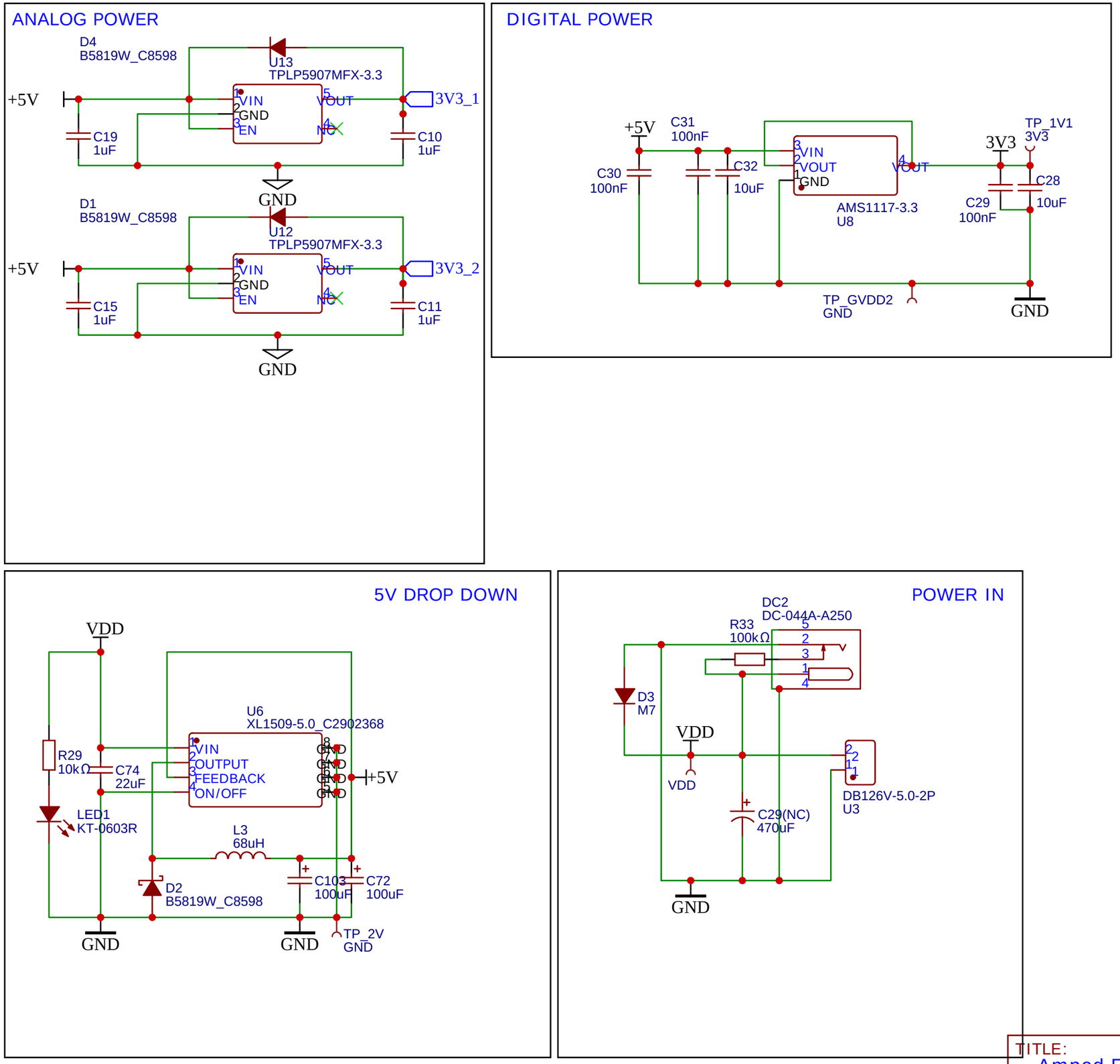


TITLE:
Amped ESP32 Plus (PCM5122 + TPA3110)

REV: B

Company: Sonocotta

Sheet: 2/3

Date: 2026-01-03

Drawn By: andriy@sonocotta.com

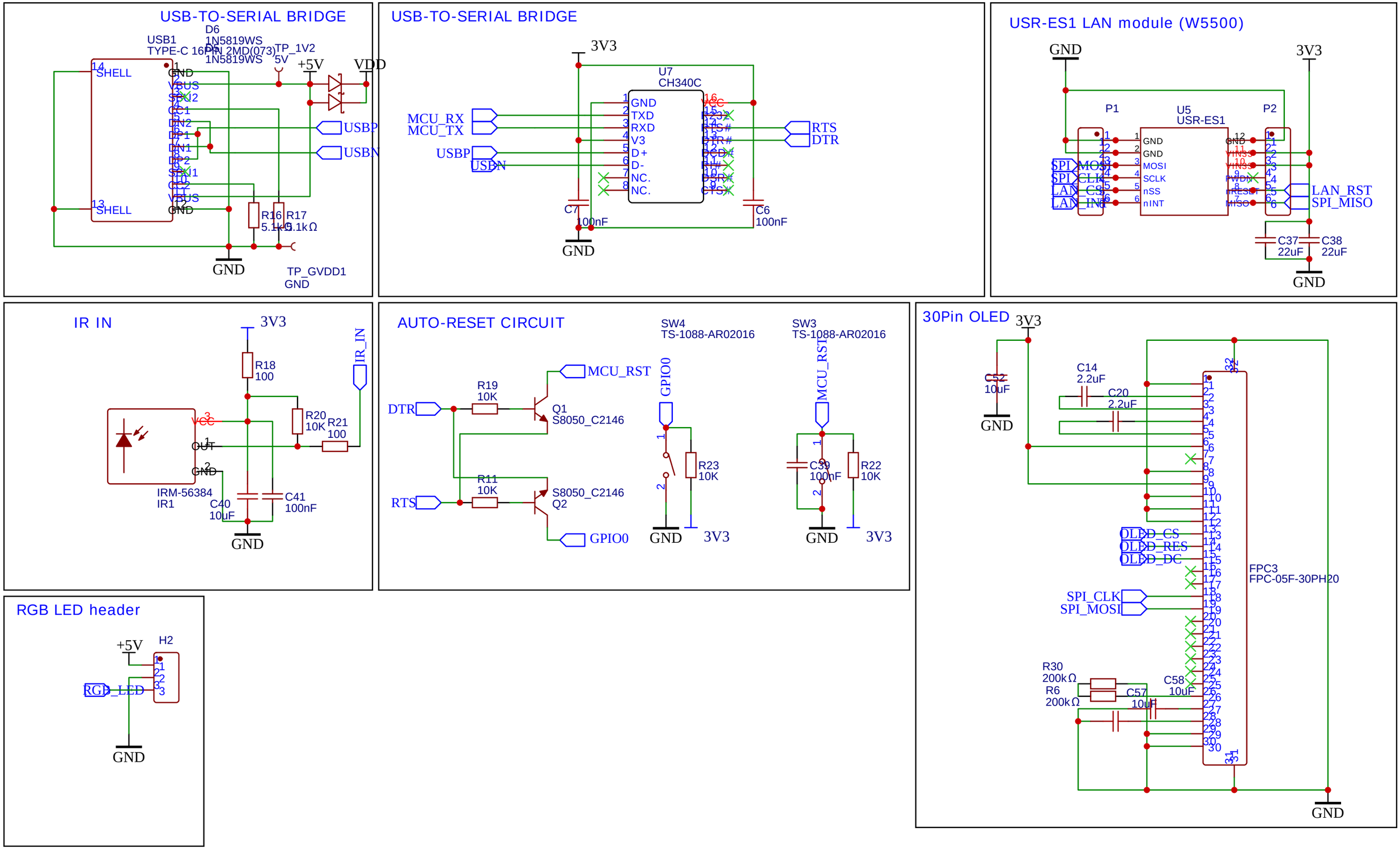


TITLE:
Amped ESP32 Plus (PCM5122 + TPA3110)

REV: B

Company: Sonocotta

Sheet: 3/3

Date: 2026-01-03

Drawn By: andriy@sonocotta.com