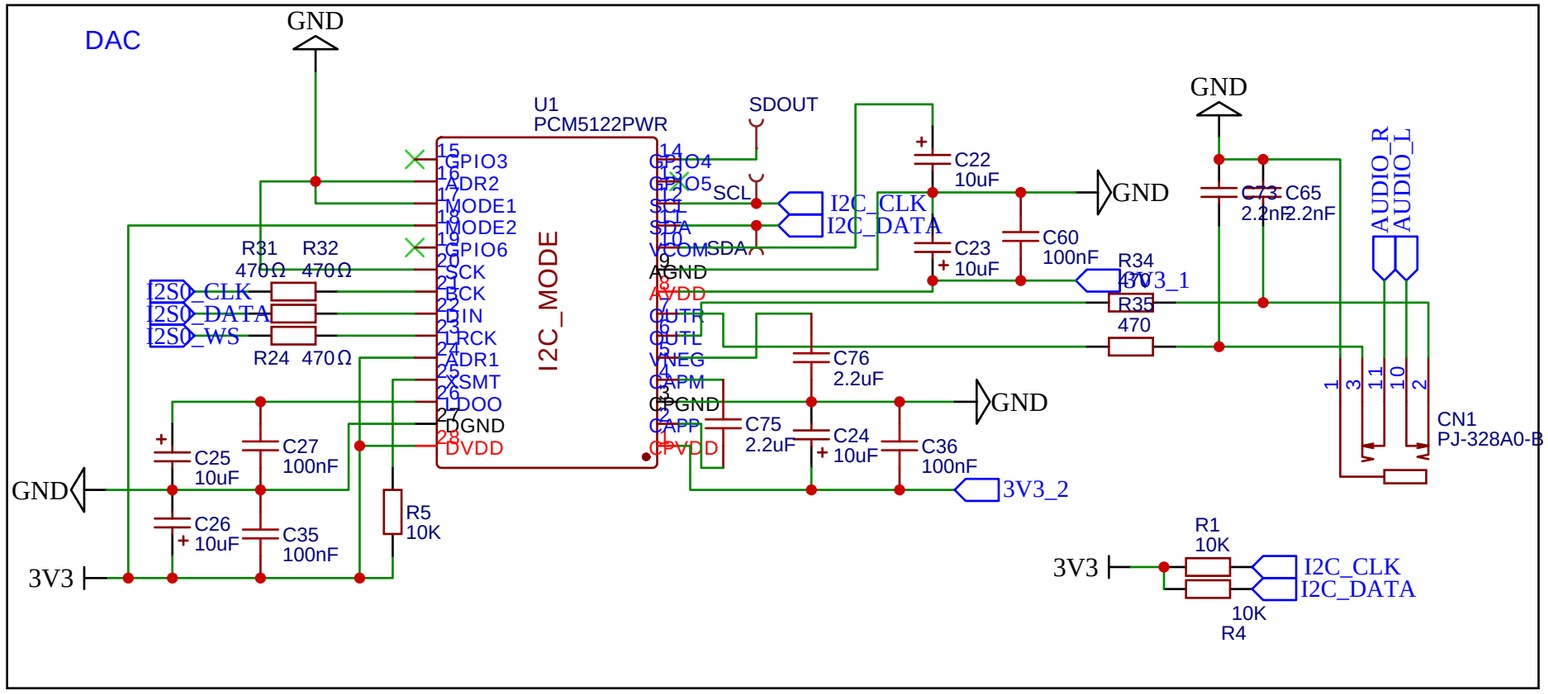

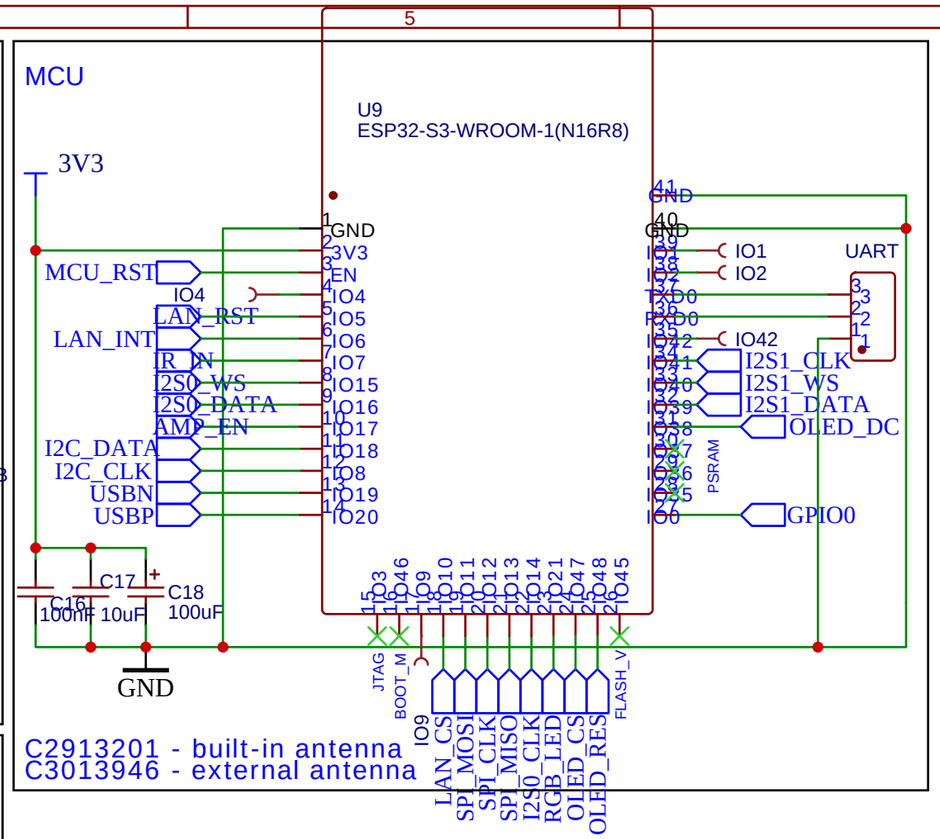

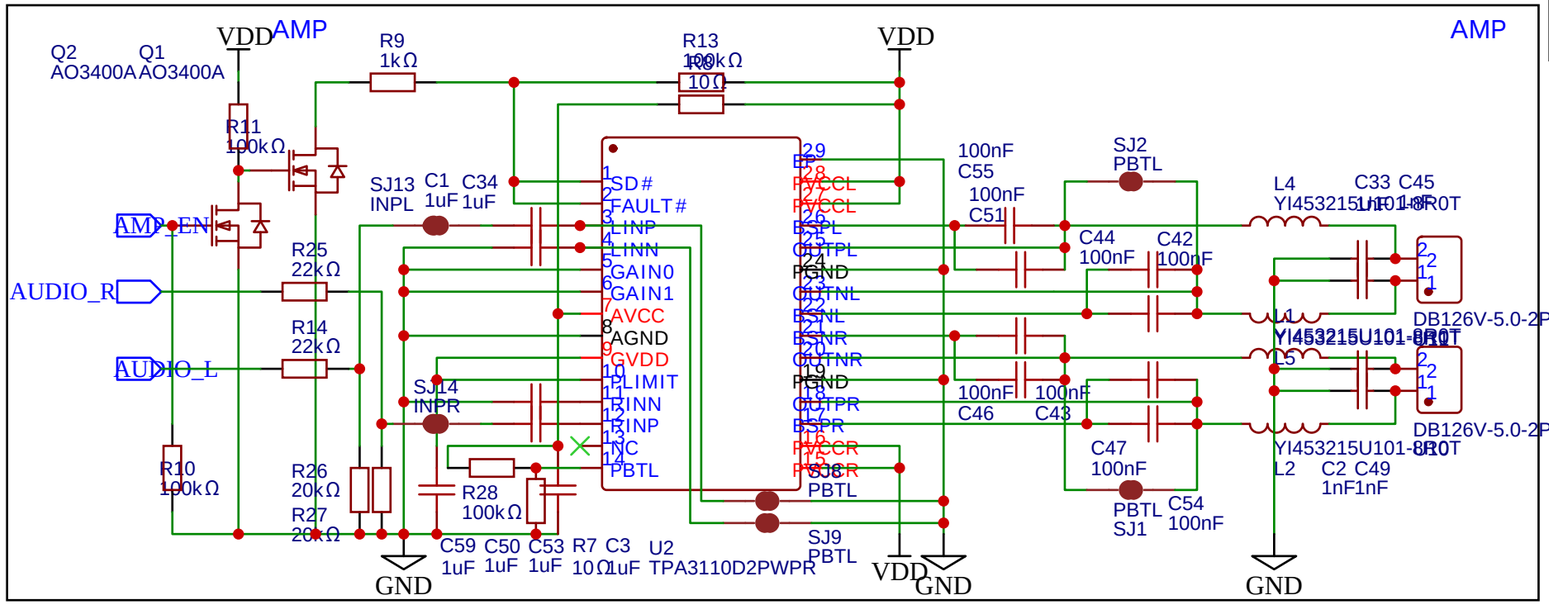

New pinout for I2C!
No DAC_EN, only AMP_EN

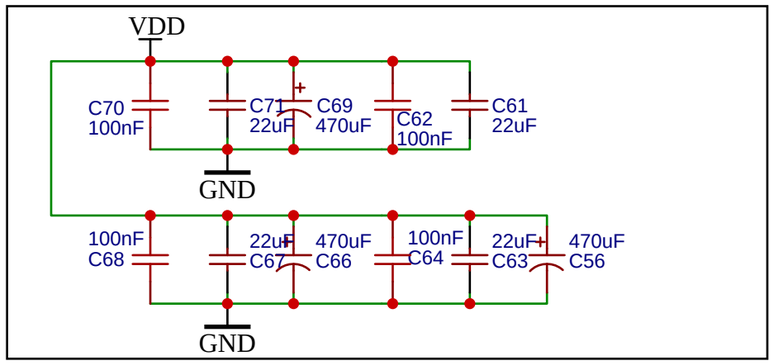

TITLE: Amped ESP32 S3 Plus (PCM5122 + TPA3110)	REV: C
Company: Sonocotta	Sheet: 1/3
Date: 2026-01-03 Drawn By: andriy@sonocotta.com	

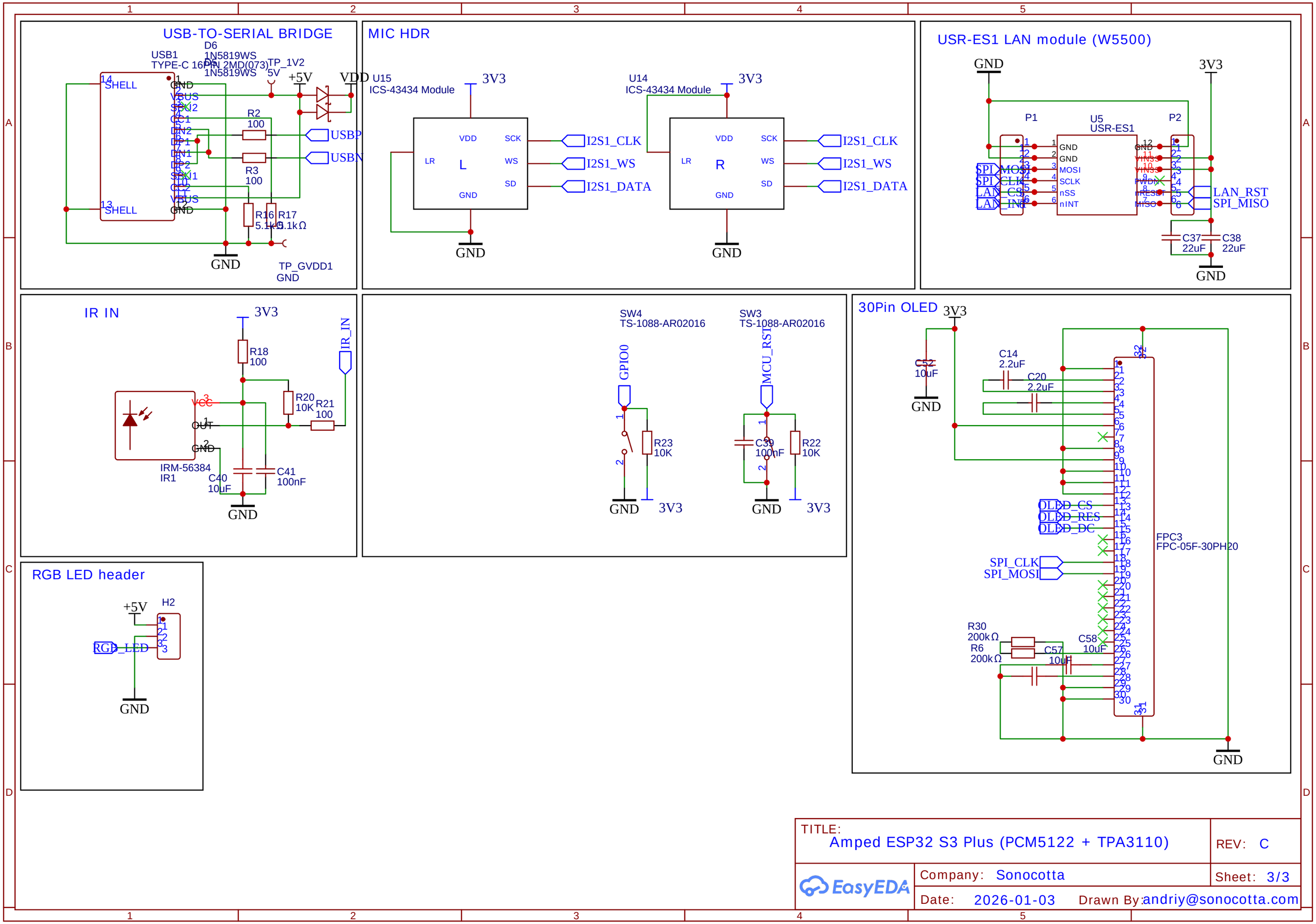

TITLE:
Amped ESP32 S3 Plus (PCM5122 + TPA3110)

REV: C

Company: Sonocotta

Sheet: 3/3

Date: 2026-01-03

Drawn By: andriy@sonocotta.com

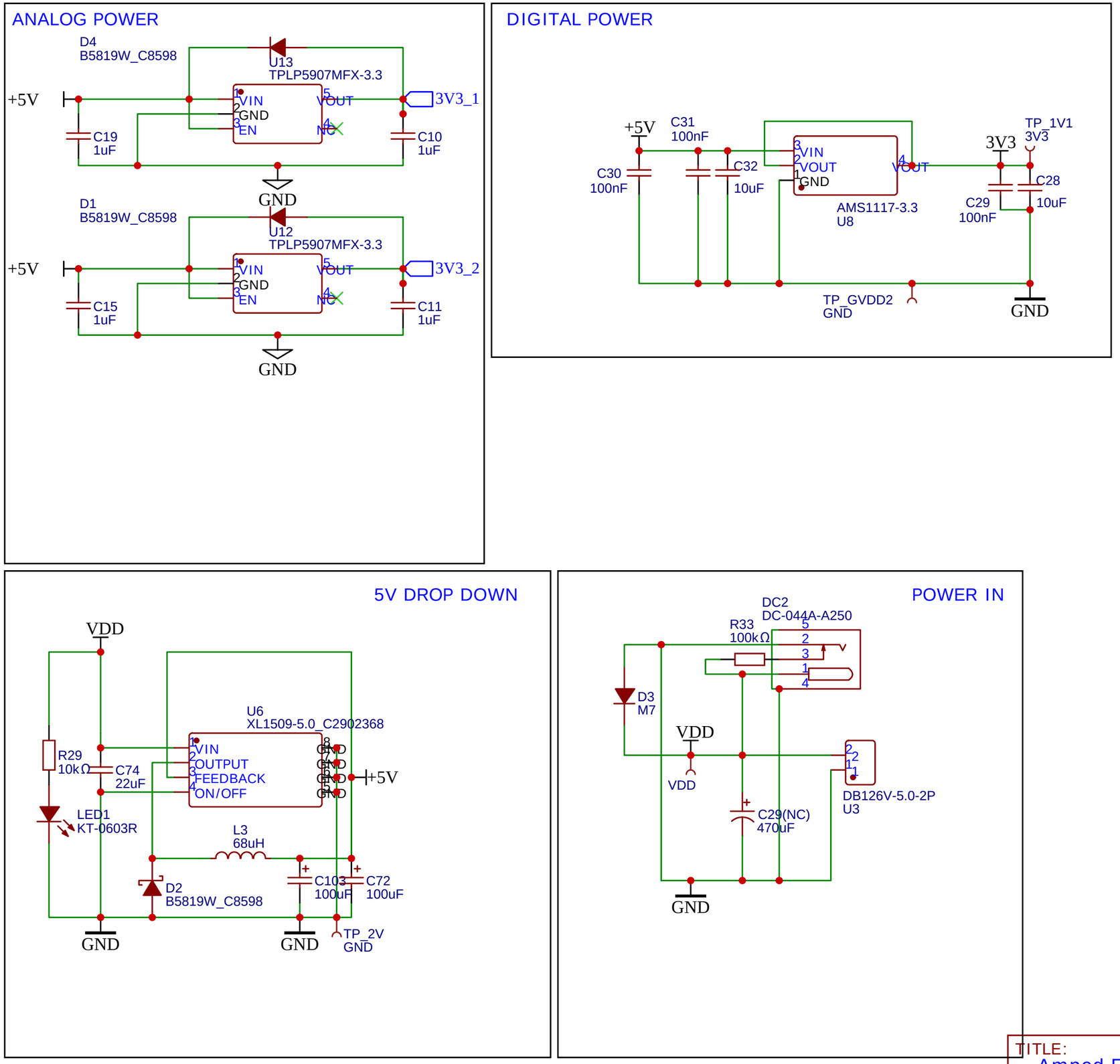

TITLE:
Amped ESP32 S3 Plus (PCM5122 + TPA3110)

REV: C

Company: Sonocotta

Sheet: 2/3

Date: 2026-01-03

Drawn By: andriy@sonocotta.com