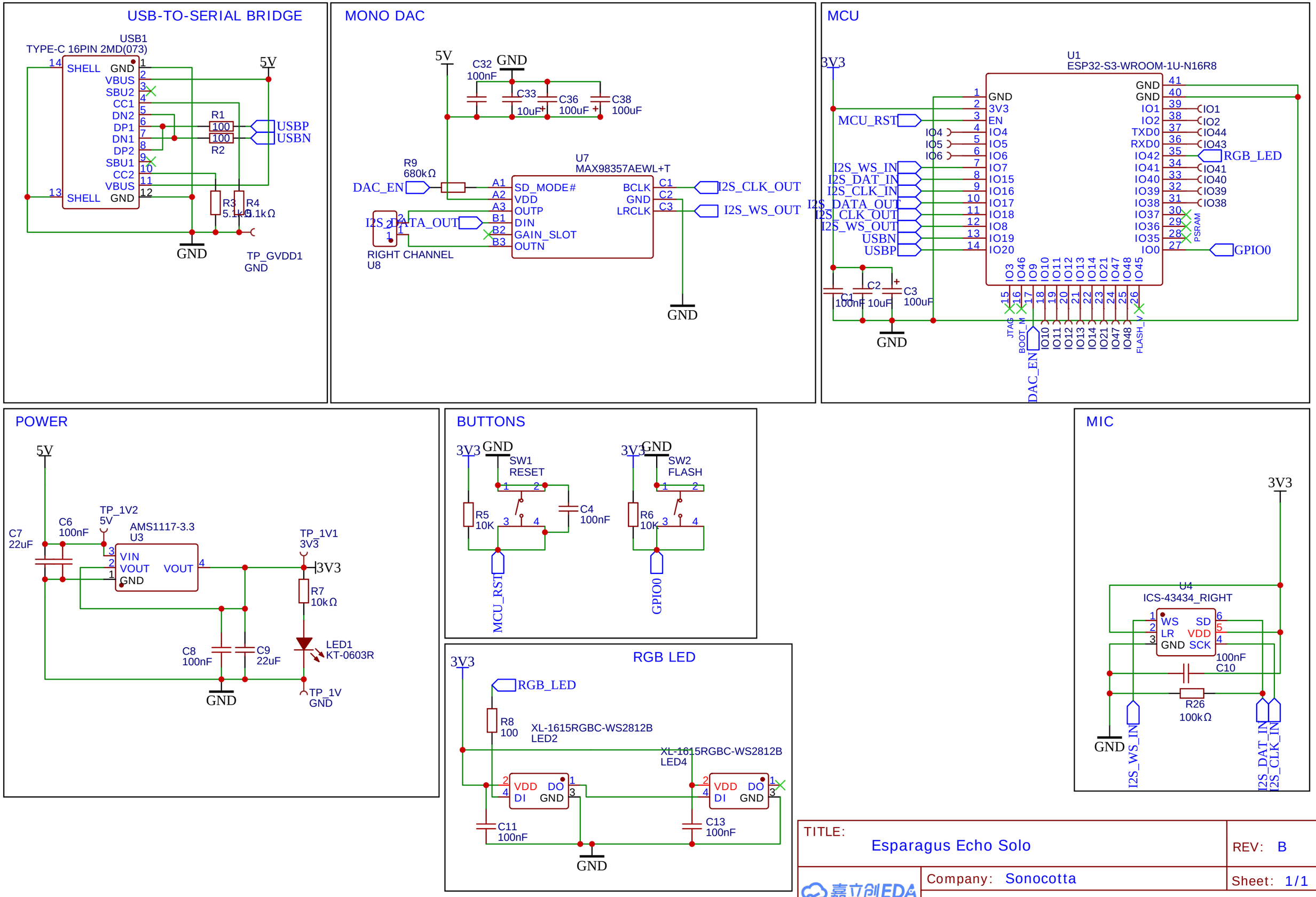

TITLE: Esparagus Echo Solo		REV: B
嘉立创EDA	Company: Sonocotta	Sheet: 1/1
	Date: 2024-11-18	Drawn By: andriy@sonocotta.com