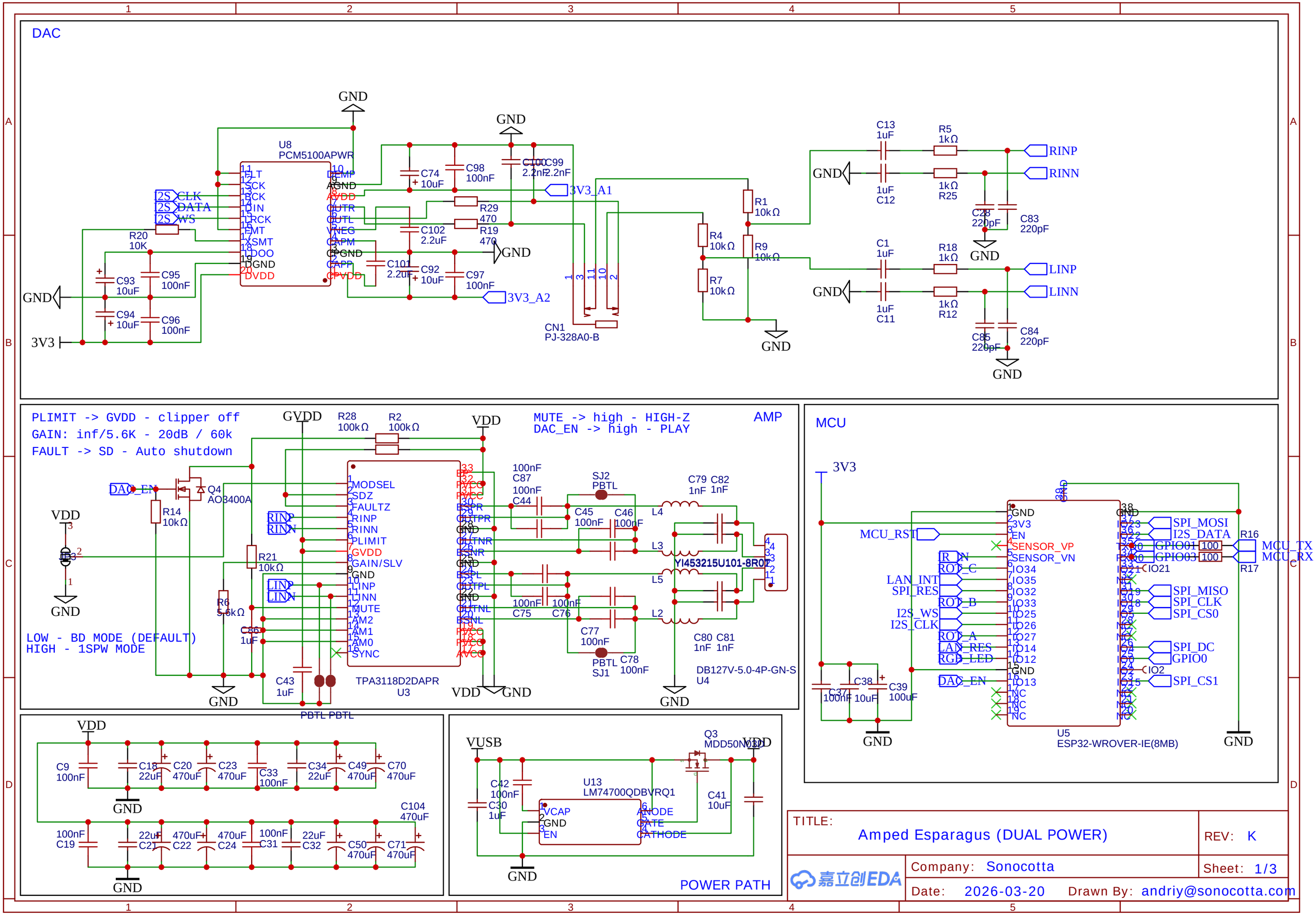

TITLE: Amped Esparagus (DUAL POWER)

REV: K

Company: Sonocotta

Sheet: 1/3

Date: 2026-03-20

Drawn By: andriy@sonocotta.com

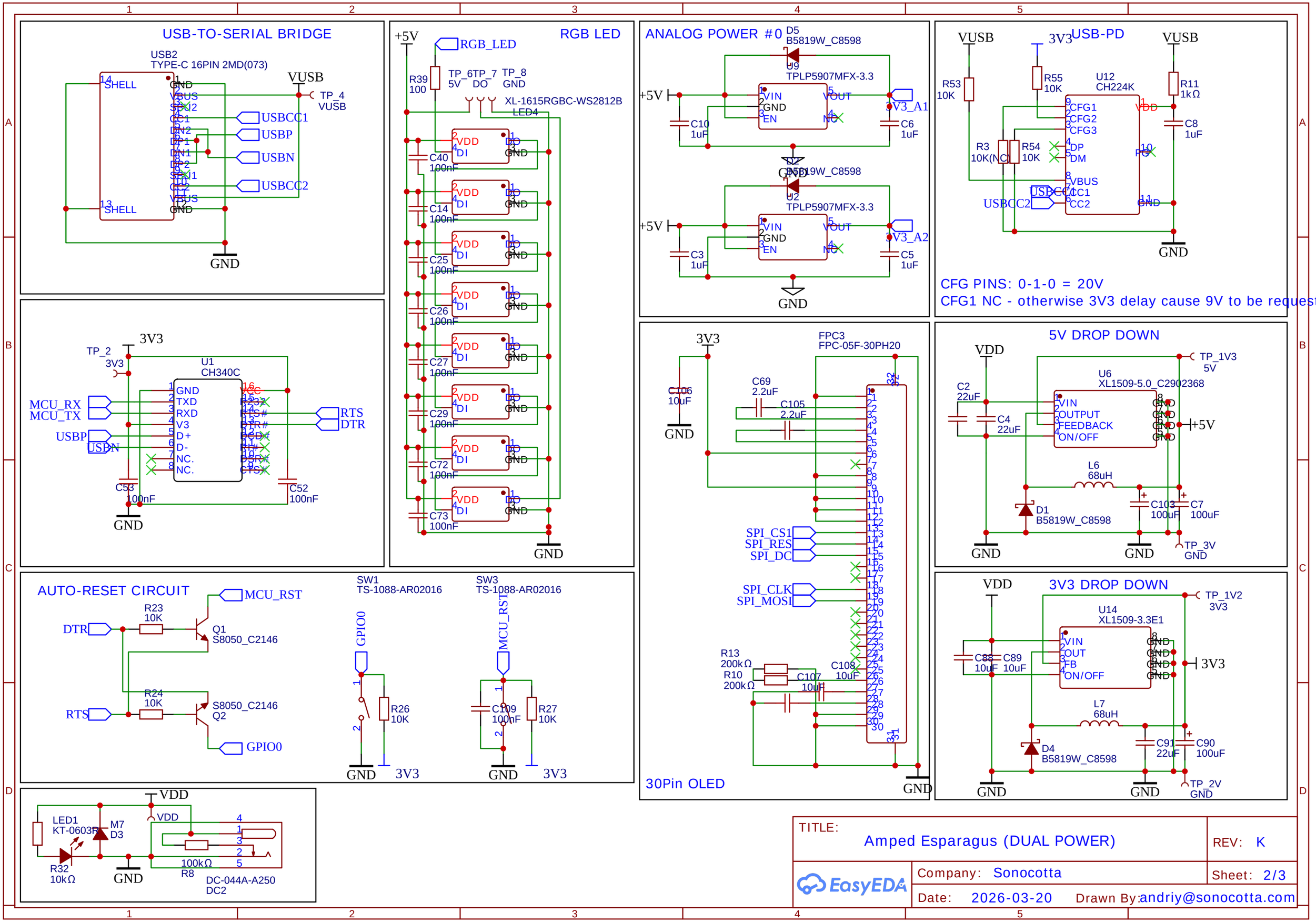

TITLE: Amped Esparagus (DUAL POWER)

REV: K

Company: Sonocotta

Sheet: 2/3

Date: 2026-03-20

Drawn By: andriy@sonocotta.com

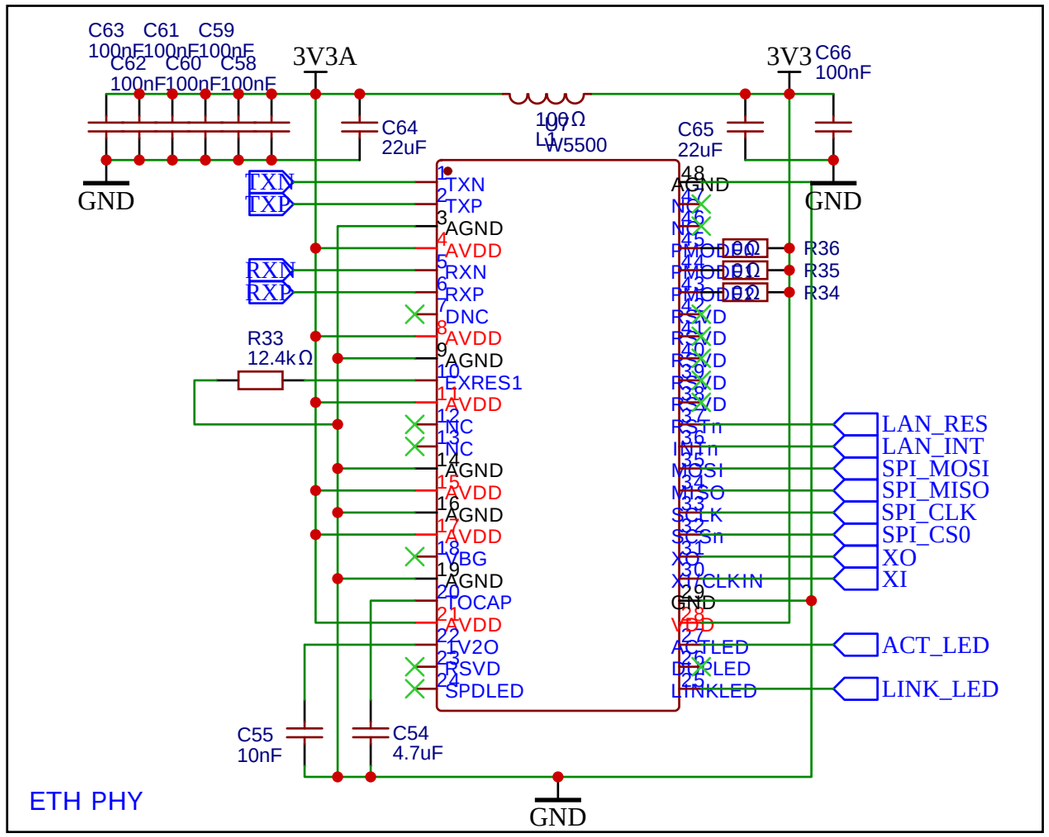

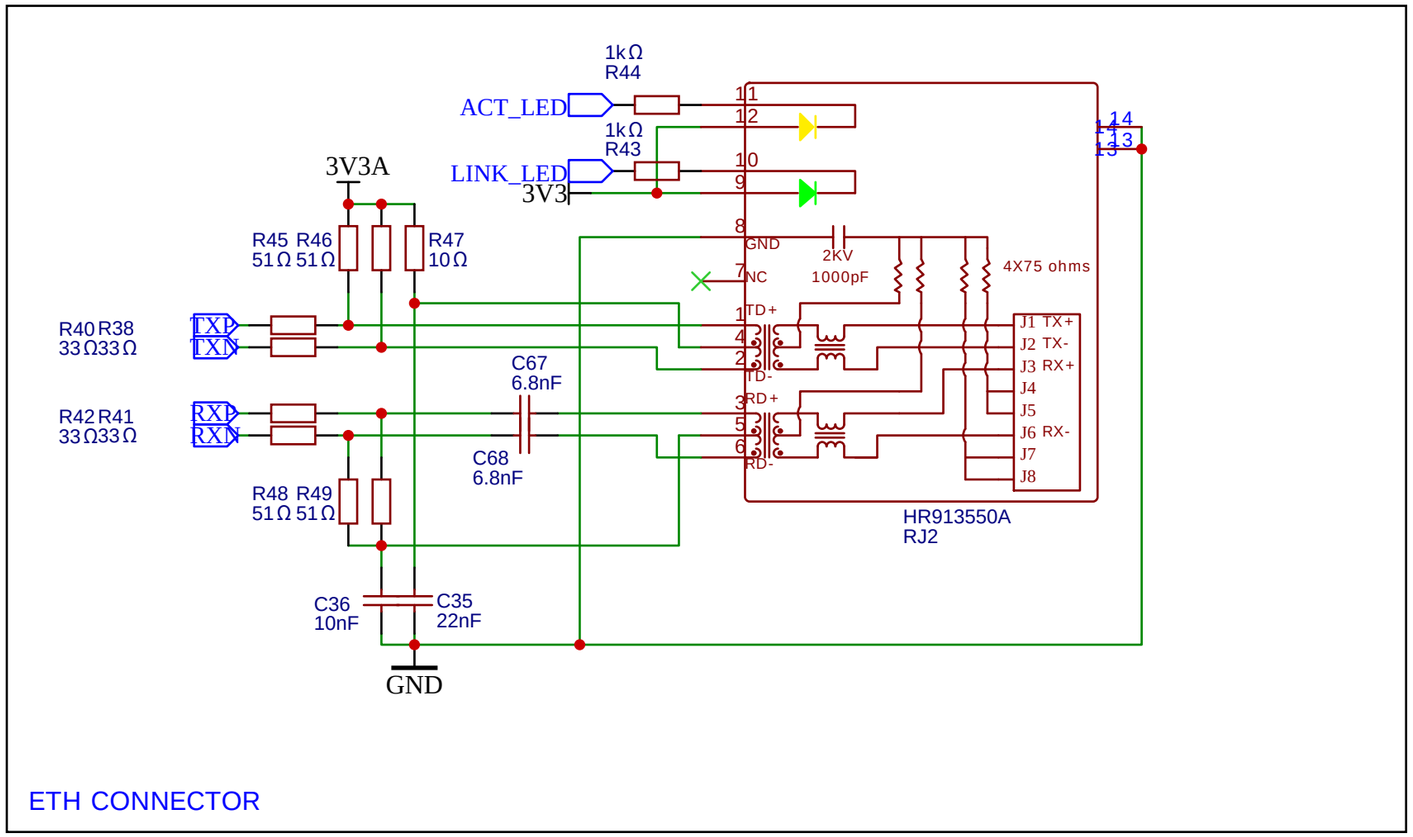

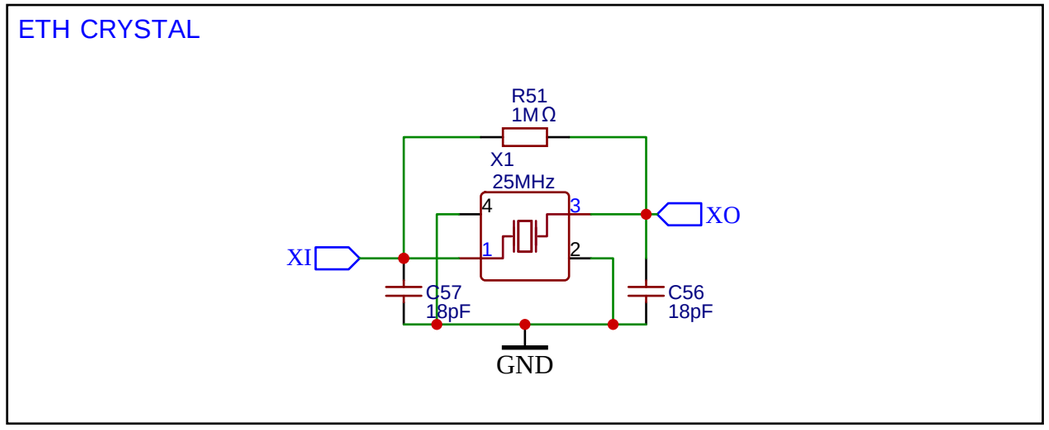

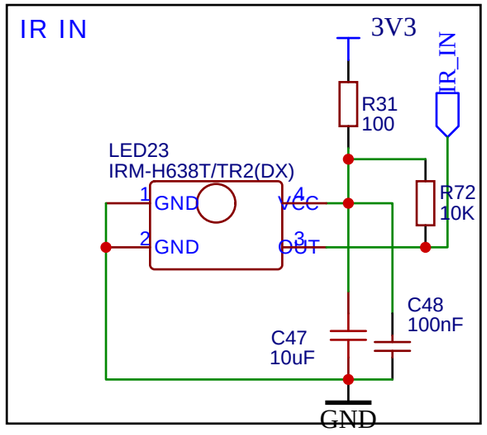

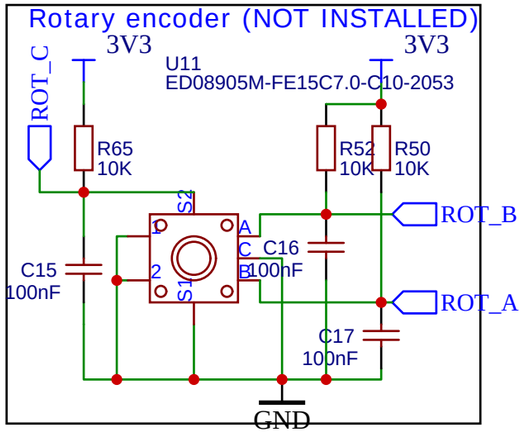

TITLE: Amped Esparagus (DUAL POWER)		REV: K
EasyEDA	Company: Sooncotta	Sheet: 3/3
	Date: 2026-03-20 Drawn By: andriy@sonocotta.com	