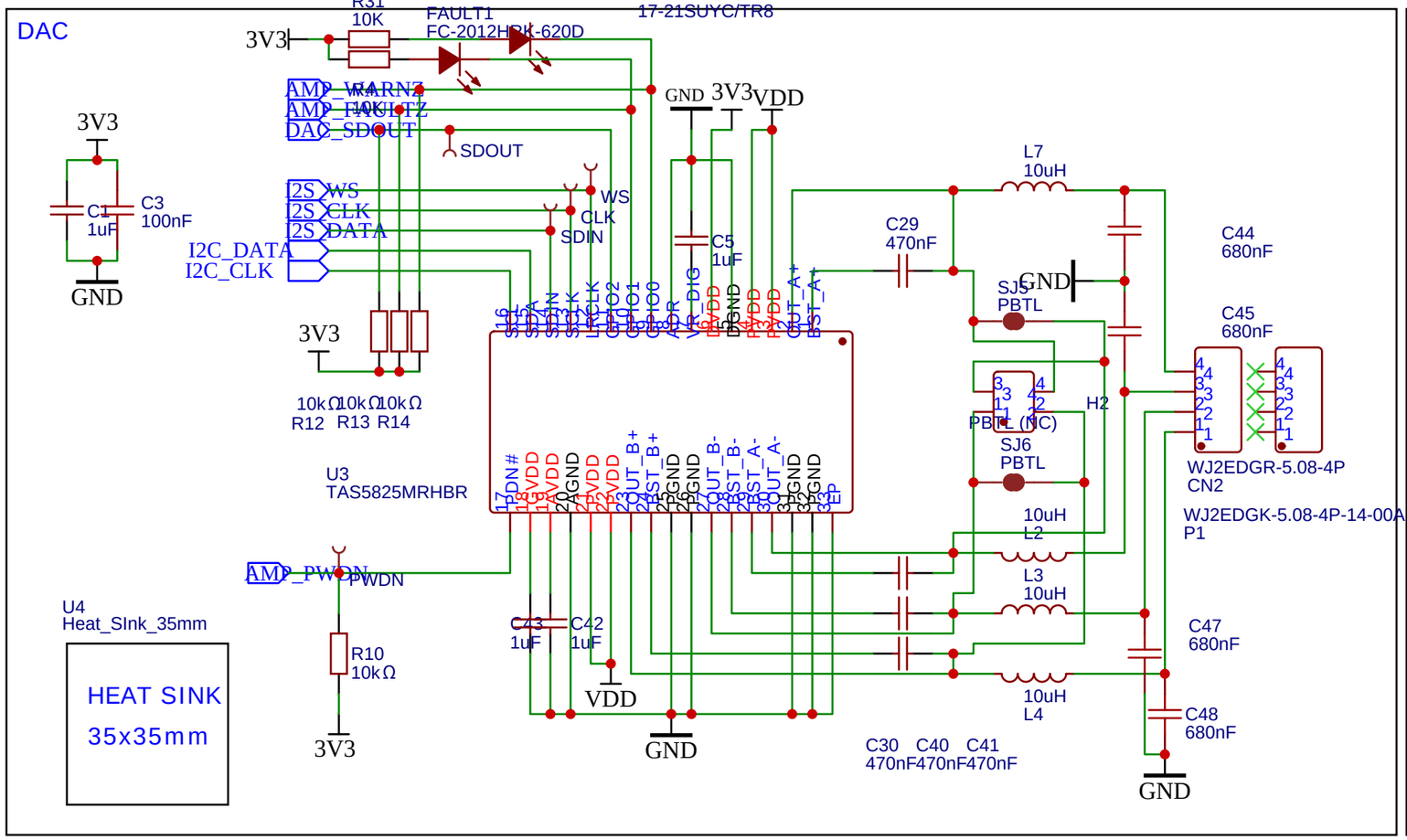

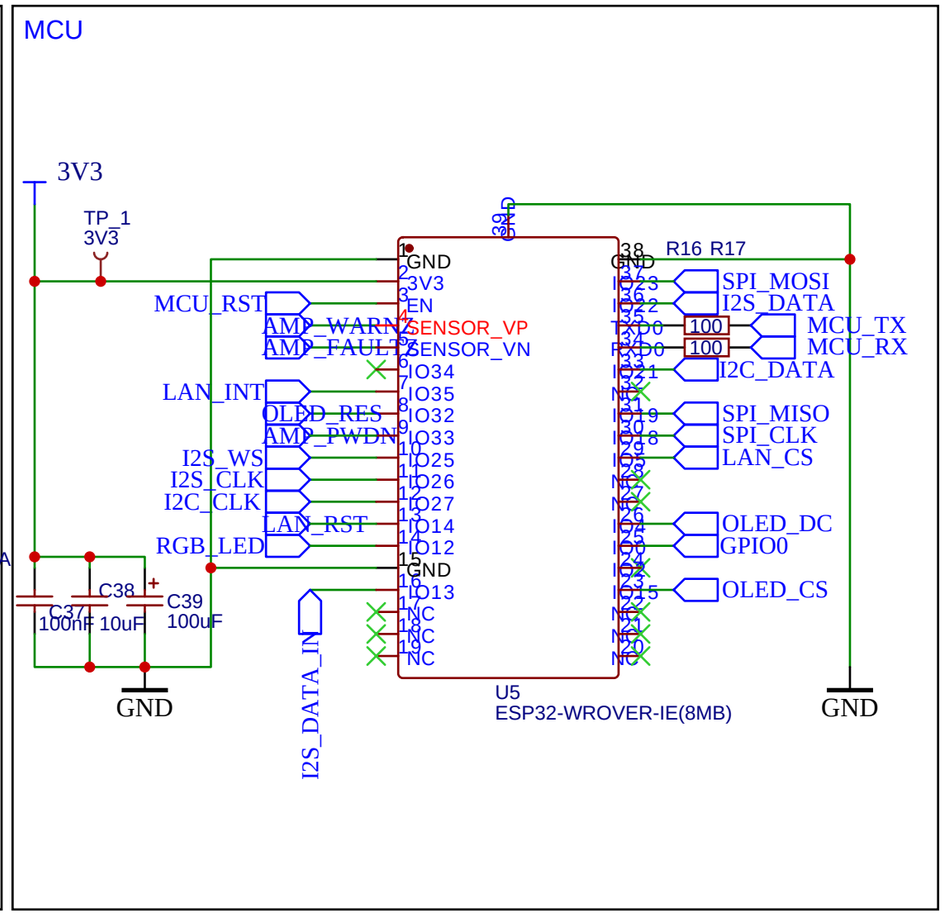

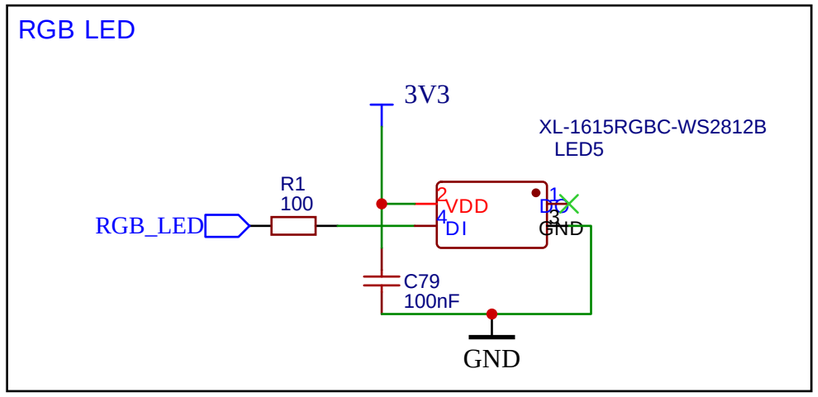

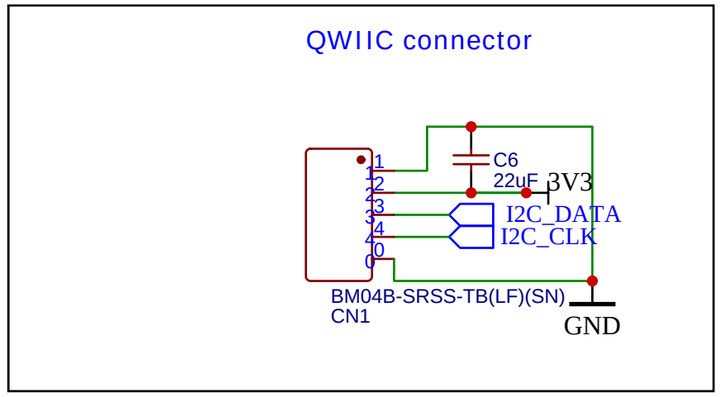

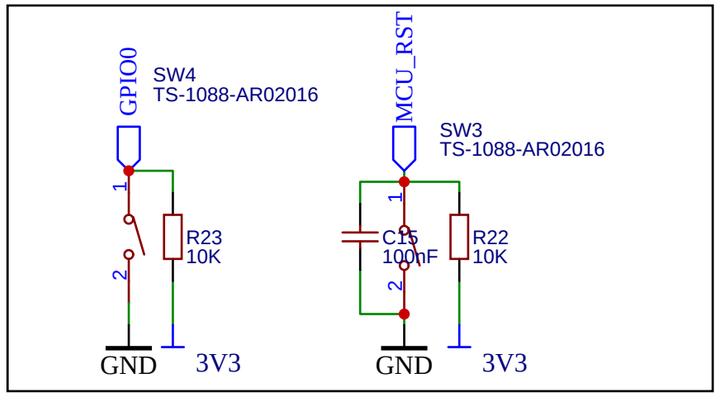

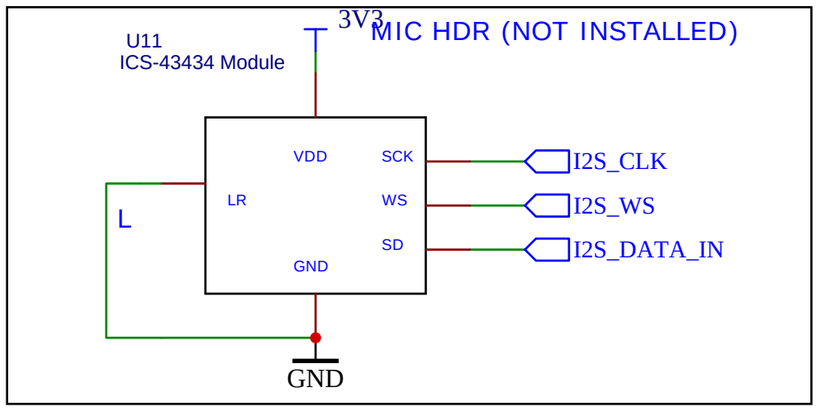

TITLE: Esparagus Audio Brick		REV: C1
嘉立创EDA	Company: Sonocotta	Sheet: 1/3
	Date: 2026-03-01	Drawn By: andriy@sonocotta.com

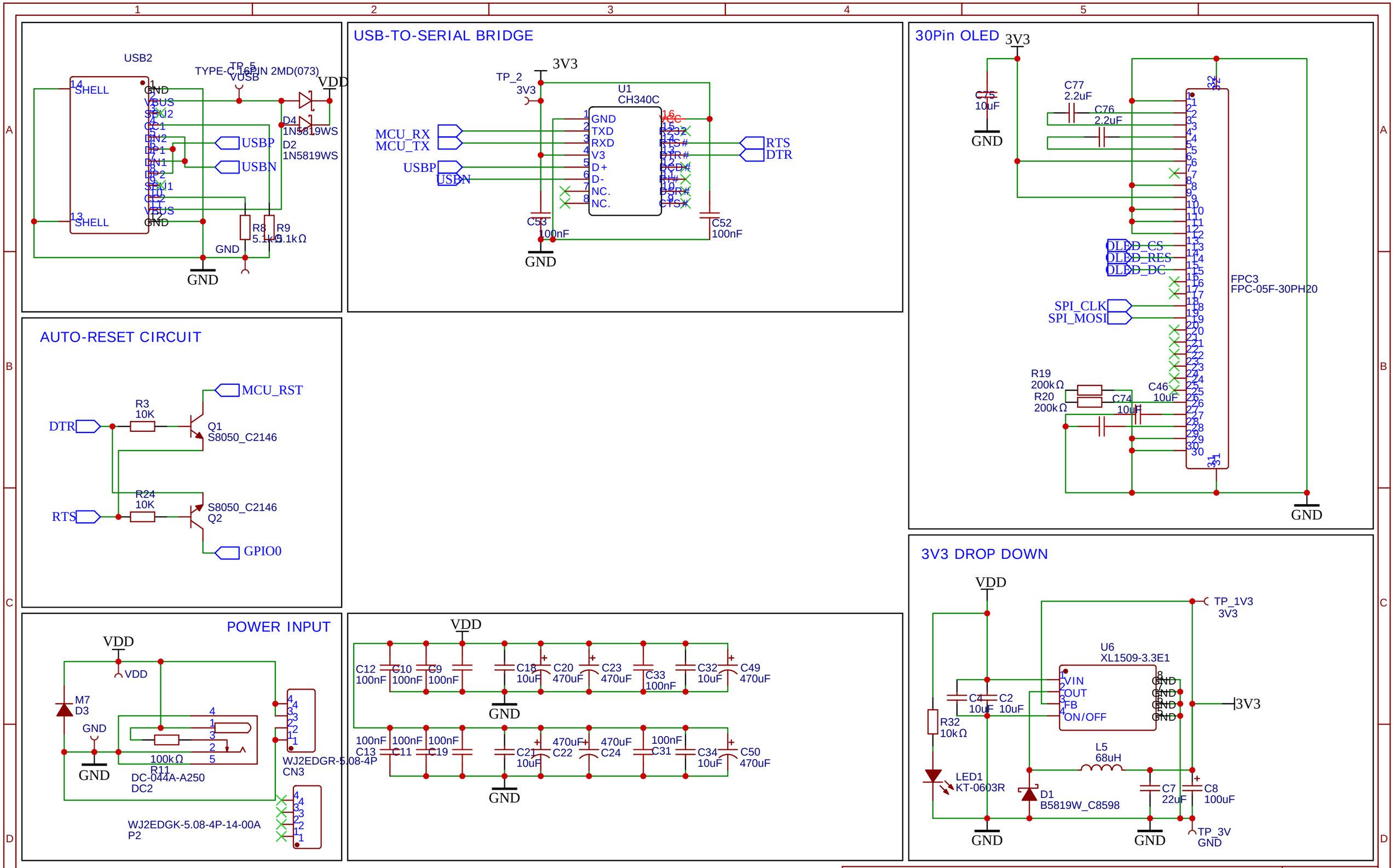

TITLE: Esparagus Audio Brick	REV: C1
EasyEDA Company: Sonocotta	Sheet: 2/3
Date: 2026-03-01 Drawn By: andriy@sonocotta.com	

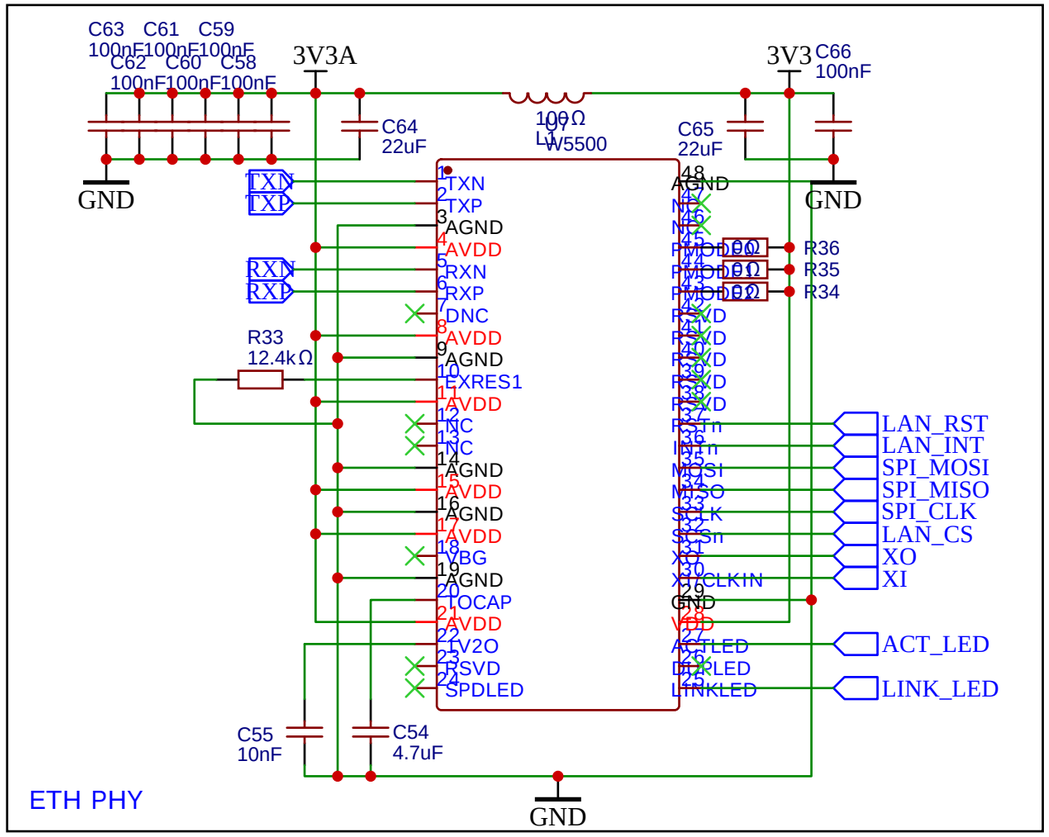

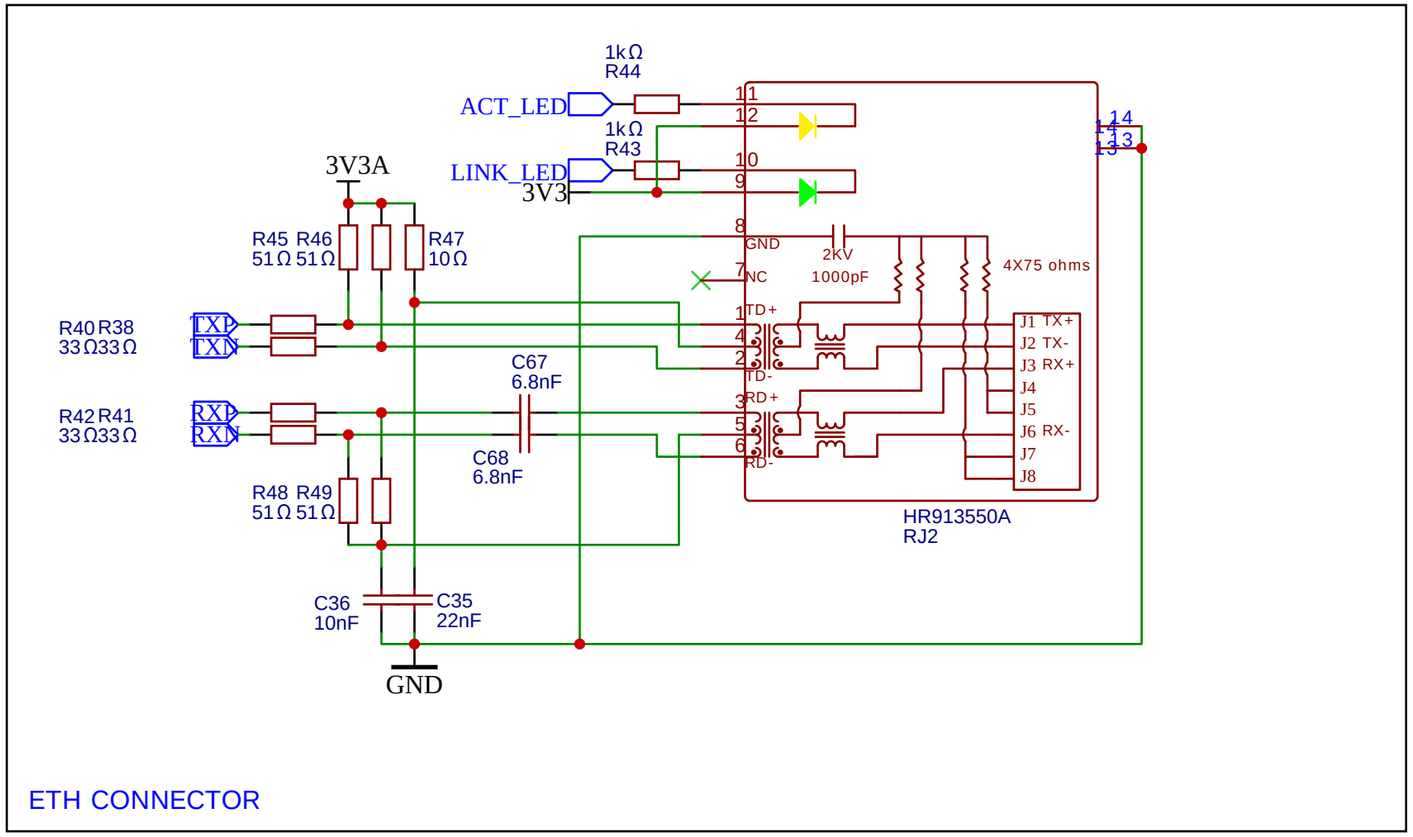

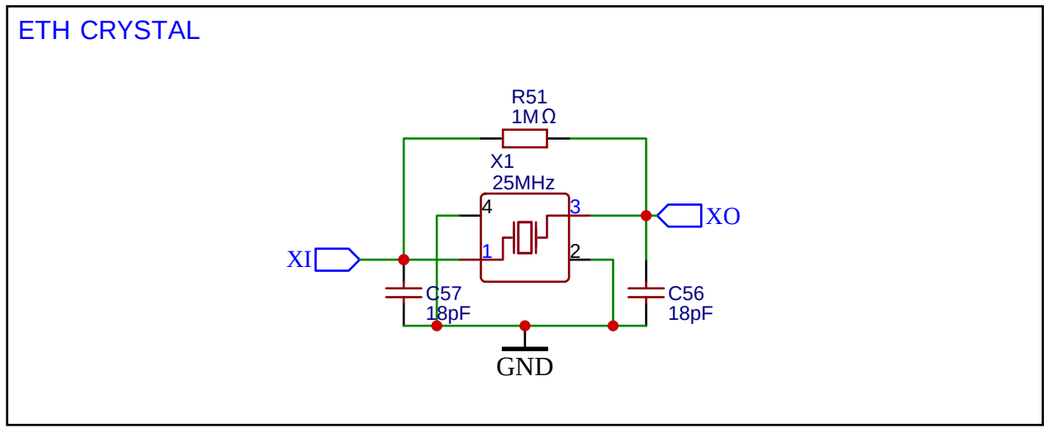

TITLE: Esparagus Audio Brick		REV: C1
EasyEDA	Company: Sonocotta	Sheet: 3/3
	Date: 2026-03-01 Drawn By: andriy@sonocotta.com	