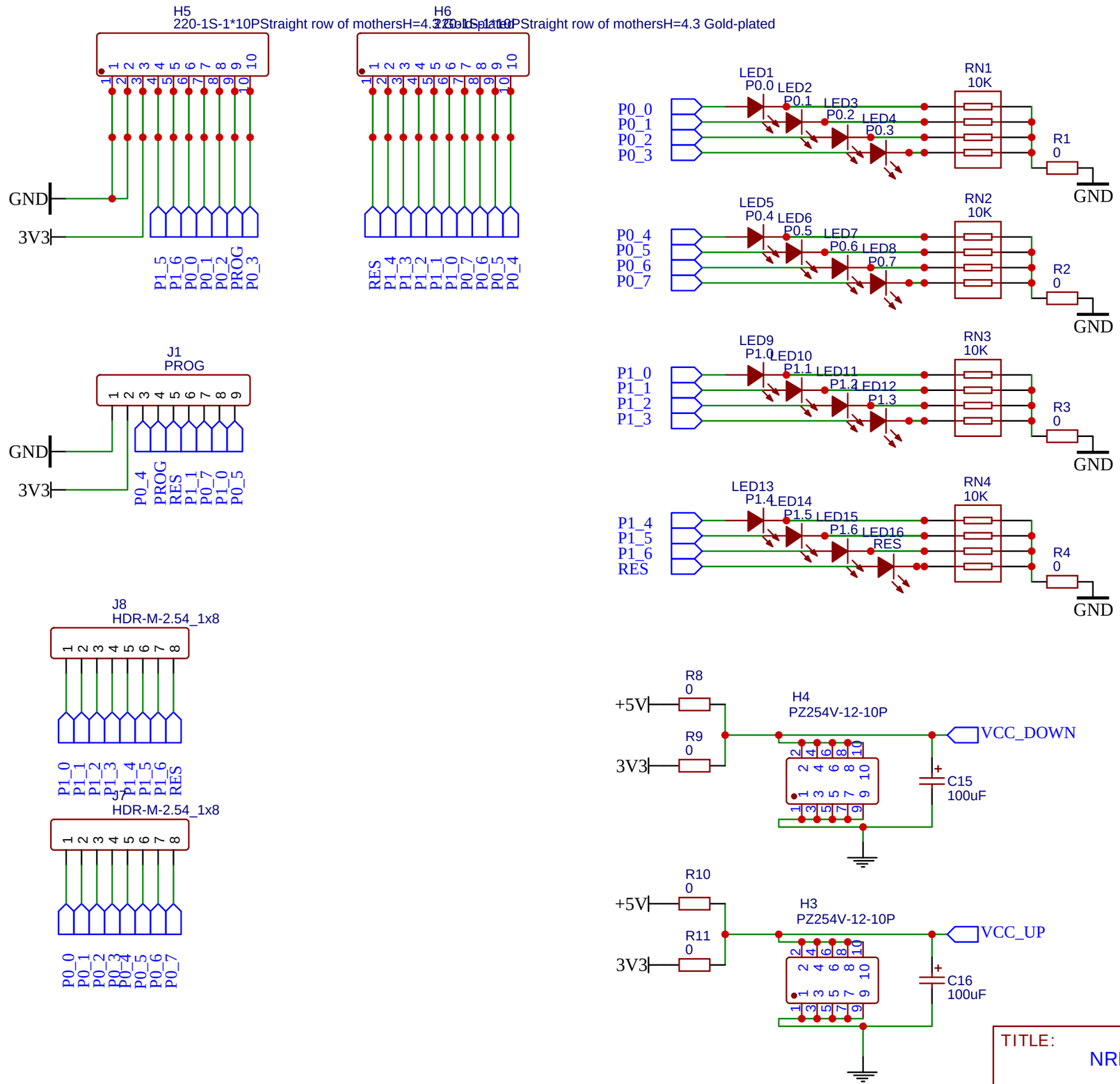

TITLE: NRF24LE1 Dev Kit		REV: C
EasyEDA	Company: Sonocotta (sonocotta.com)	Sheet: 1/2
	Date: 2021-04-22 Drawn By: andriy@sonocotta.com	

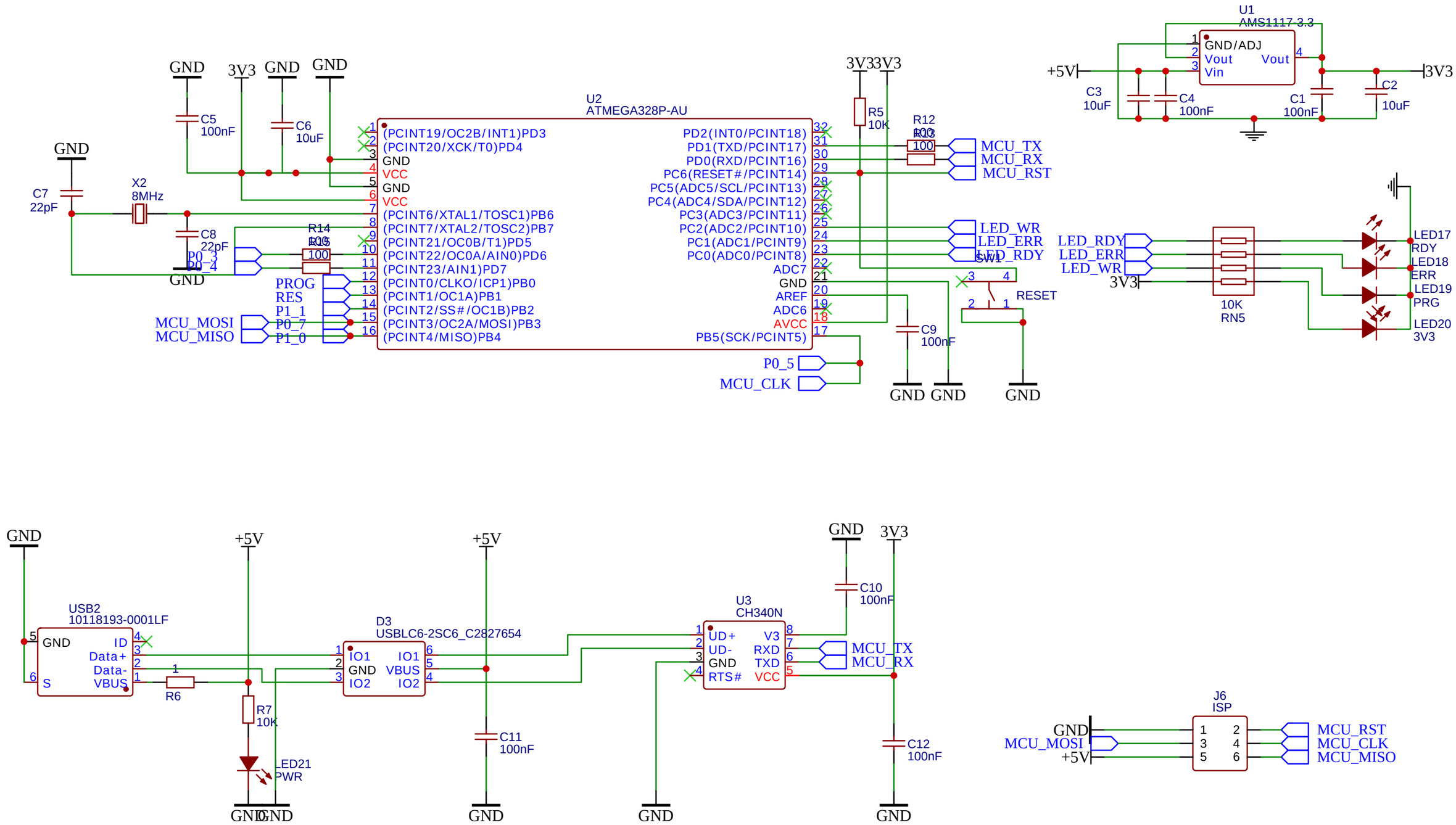

TITLE: NRF24LE1 Dev Kit		REV: C
EasyEDA	Company: Sonocotta (sonocotta.com)	Sheet: 2/2
	Date: 2021-07-11 Drawn By: andriy@sonocotta.com	