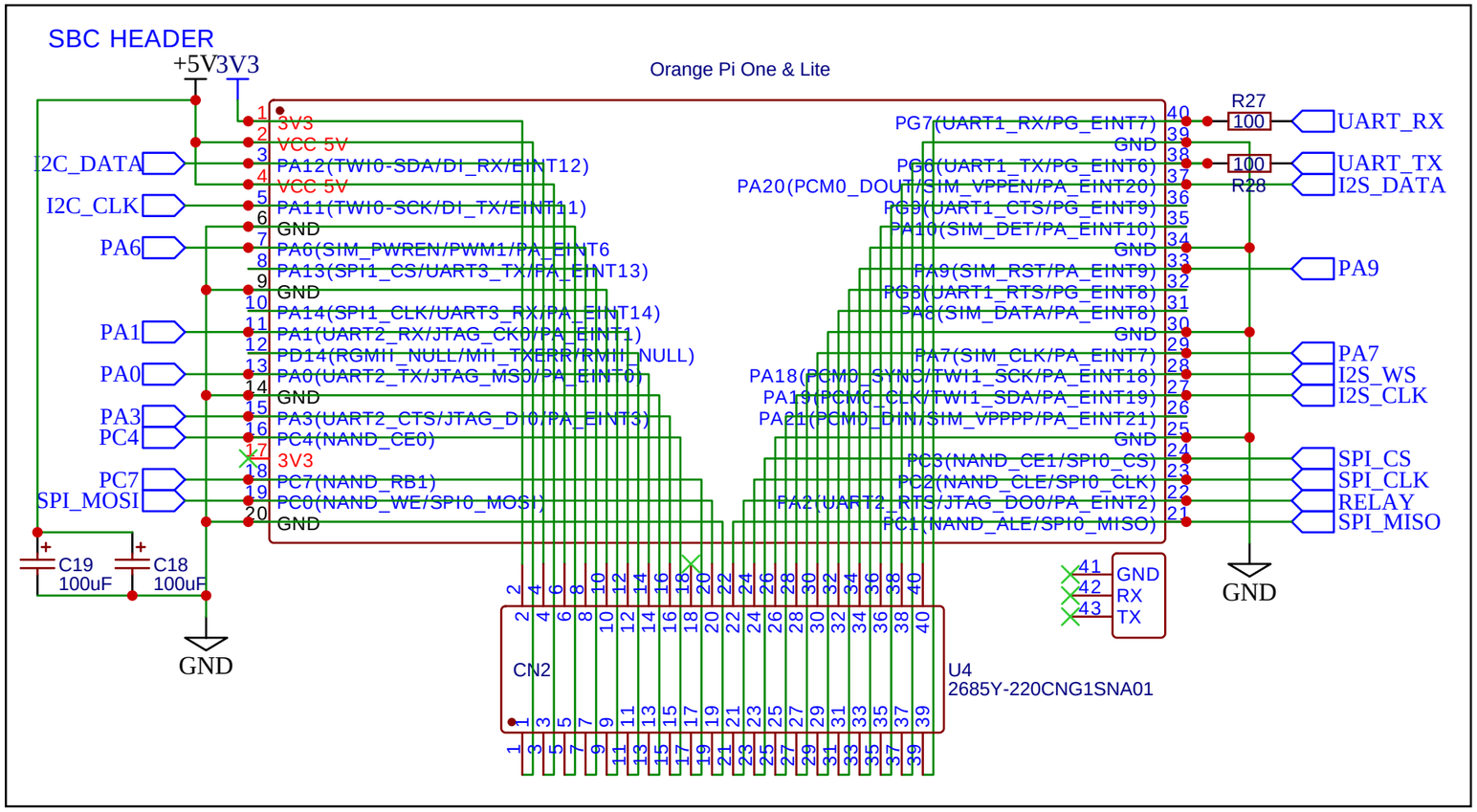

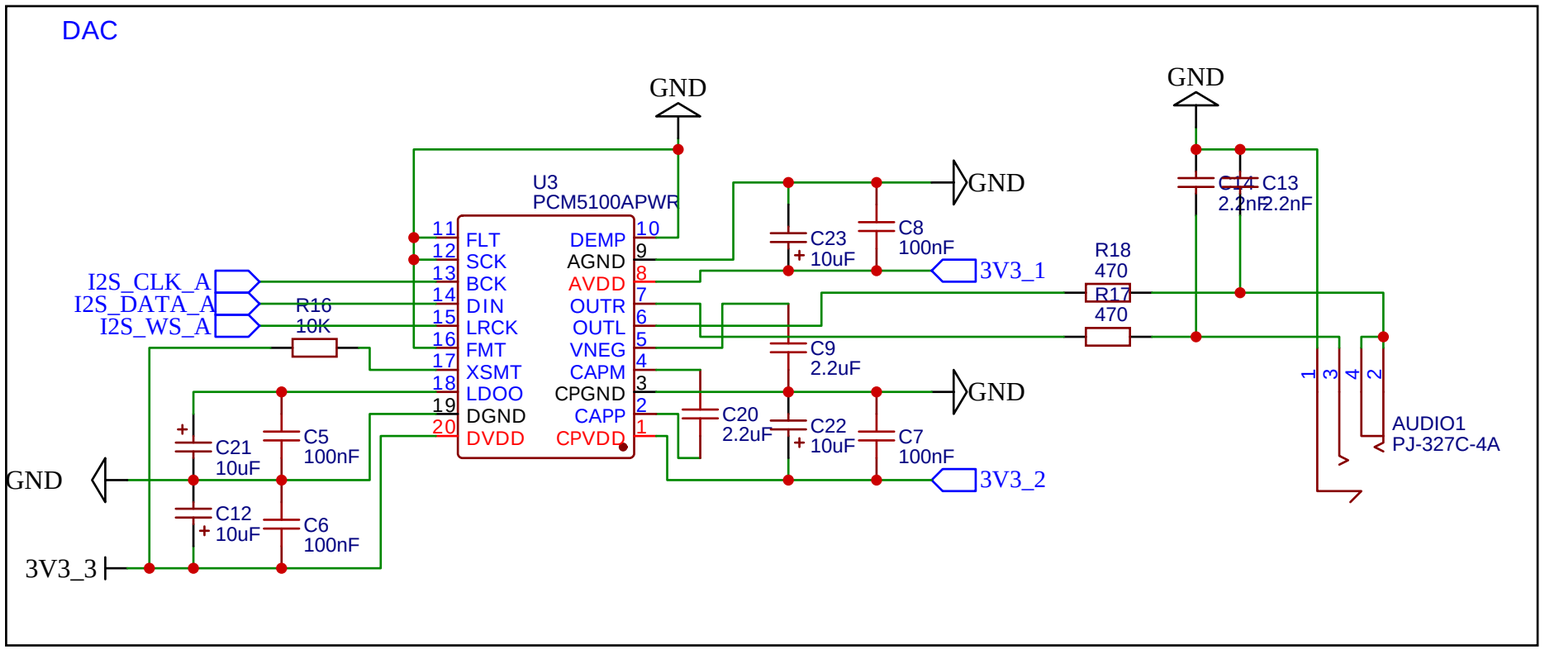

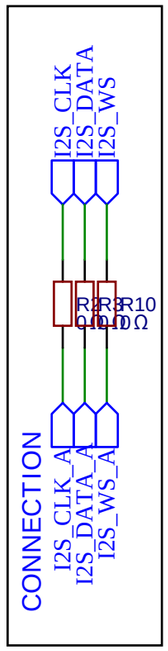

TITLE: Orange Pi HiFi		REV: D
EasyEDA	Company: Sonocotta	Sheet: 1/2
	Date: 2024-03-27 Drawn By: andriy@sonocotta.com	

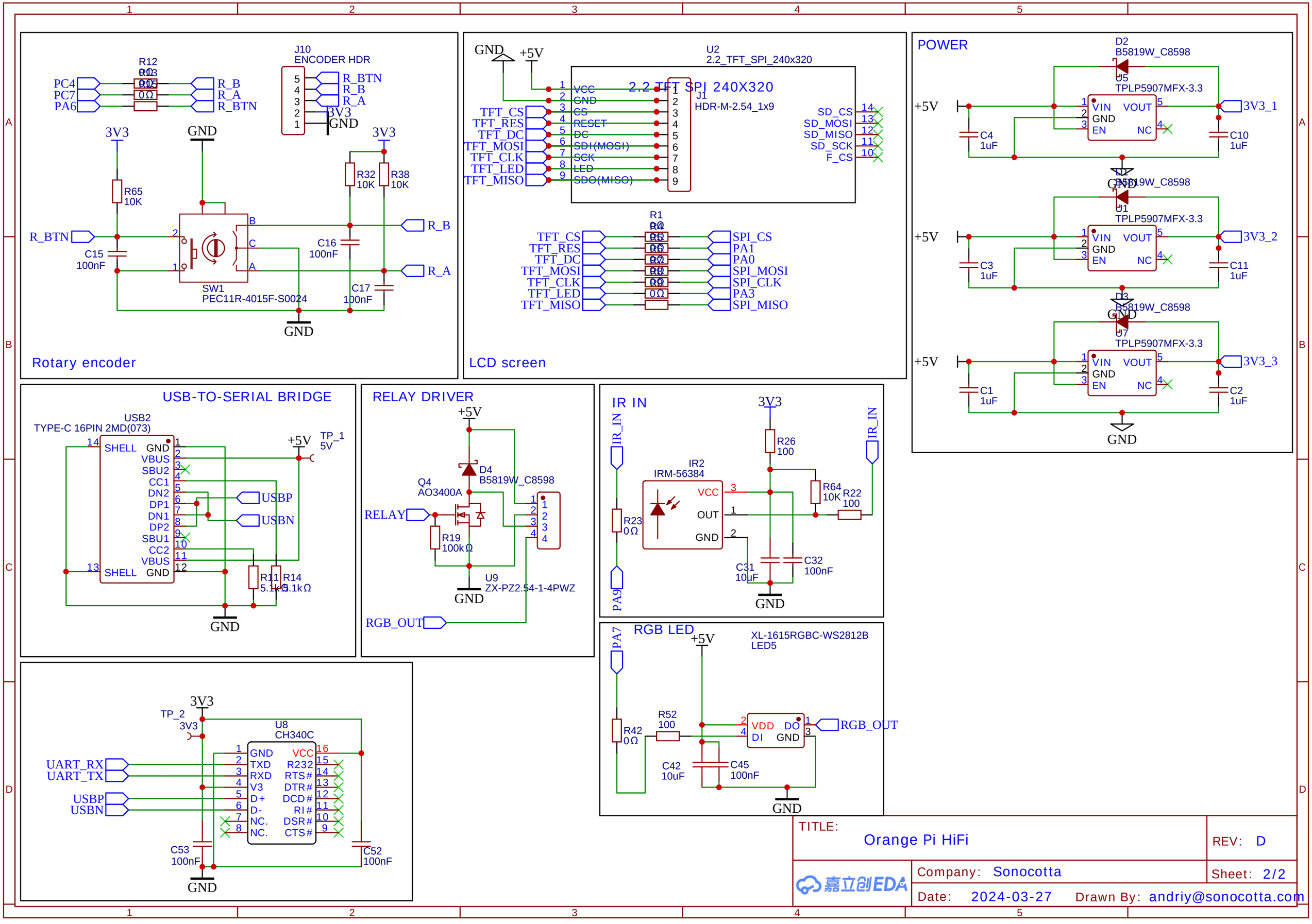

TITLE: Orange Pi HiFi

REV: D

Company: Sonocotta

Sheet: 2/2

Date: 2024-03-27

Drawn By: andriy@sonocotta.com