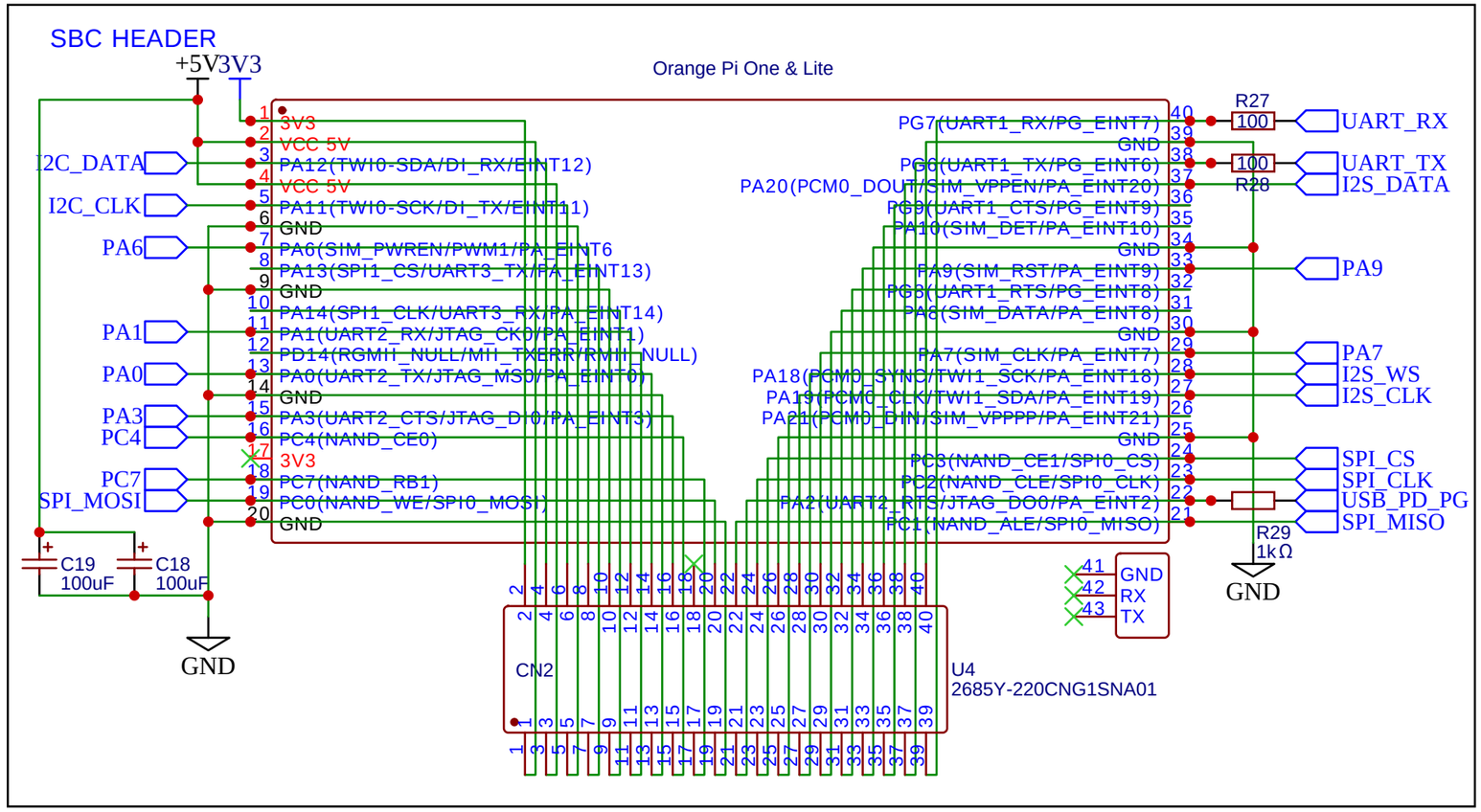

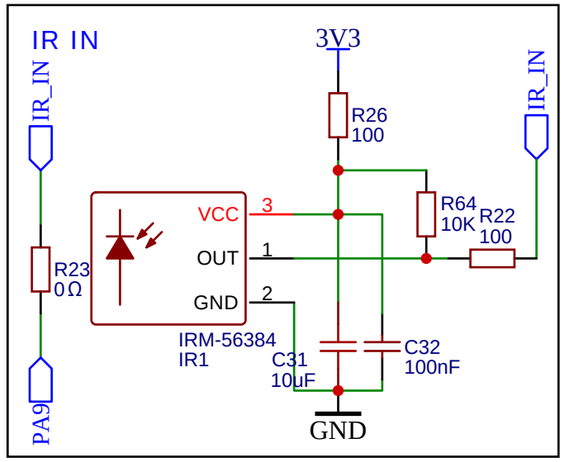

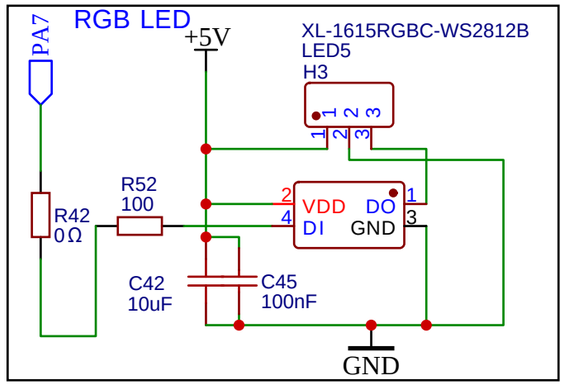

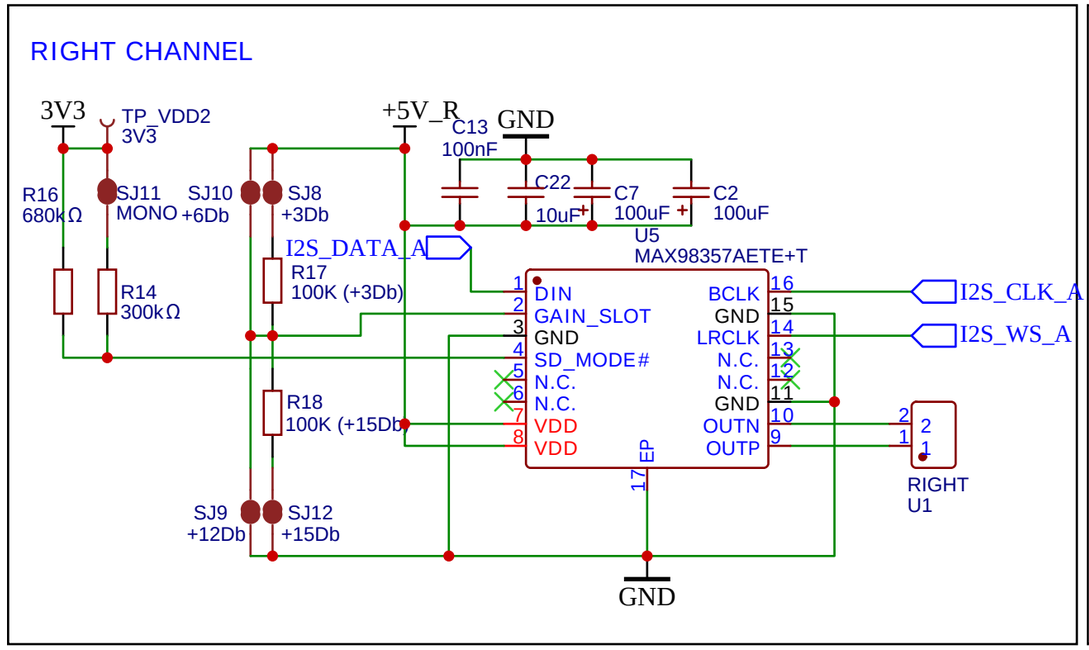

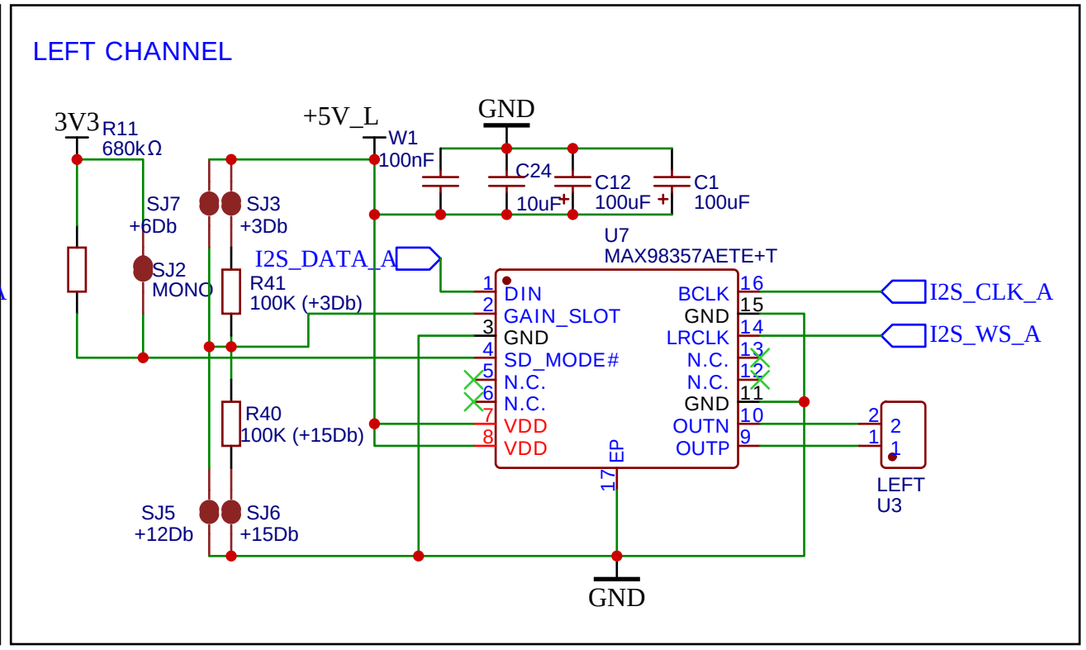

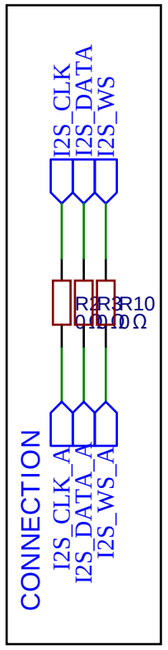

TITLE: Loud Orange Pi		REV: C
EasyEDA	Company: Sonocotta	Sheet: 1/2
	Date: 2024-03-27 Drawn By: andriy@sonocotta.com	

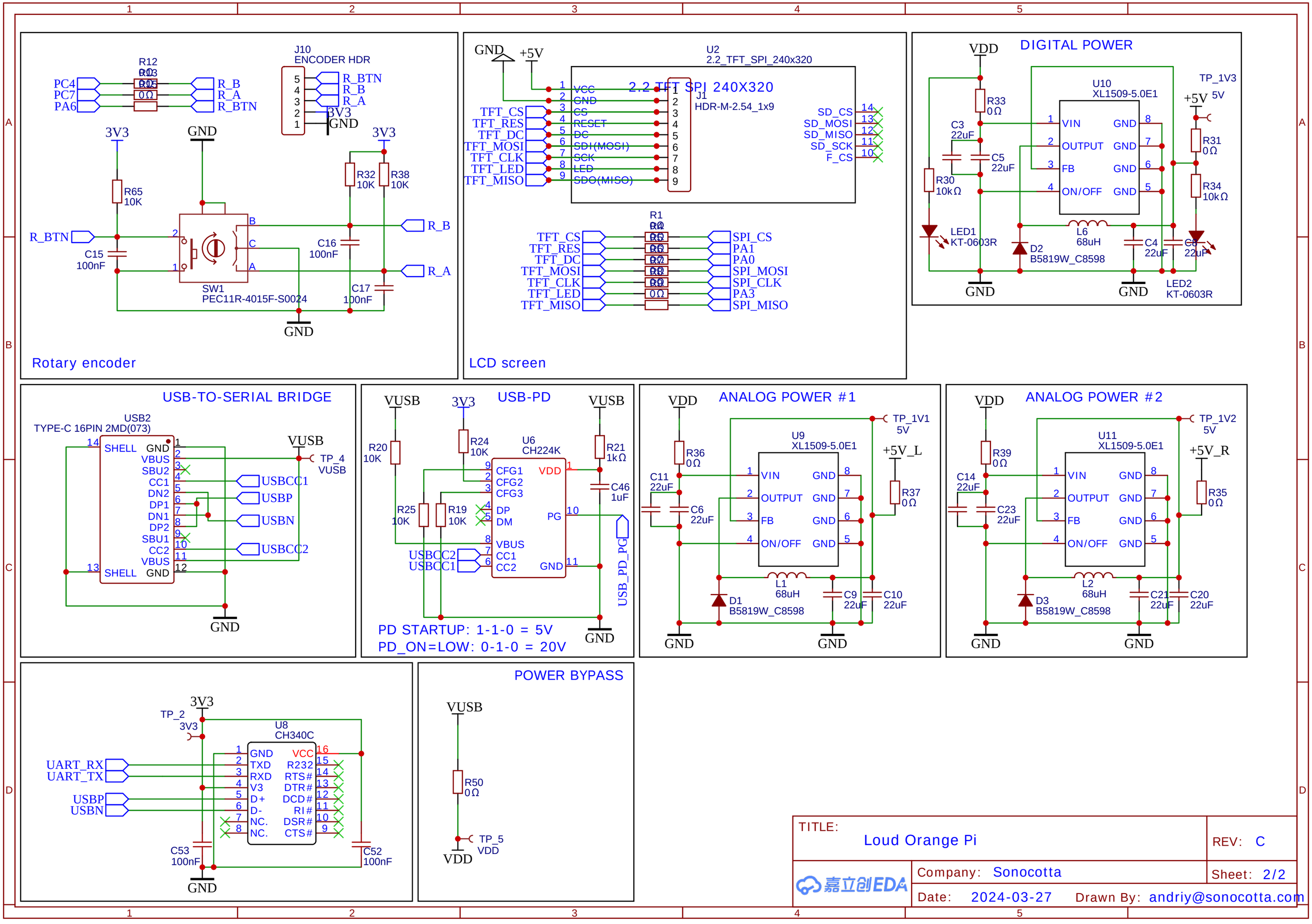
Rotary encoder
PC4
PC7
PA6
R12
R_B
R_A
R_BTN
J10
ENCODER HDR
3V3
GND
R65
10K
R_BTN
C15
100nF
SW1
PEC11R-4015F-S0024
R32
10K
R38
10K
C16
100nF
C17
100nF
LCD screen
U2
2.2_TFT_SPI_240x320
2.2 TFT SPI 240X320
J1
HDR-M-2.54_1x9
VCC
CS
RESET
DC
SDI(MOSI)
SCK
LED
SDO(MISO)
TFT_CS
TFT_RES
TFT_DC
TFT_MOSI
TFT_CLK
TFT_LED
TFT_MISO
SD_CS
SD_MOSI
SD_MISO
SD_SCK
F_CS
SPI_CS
PA1
PA0
SPI_MOSI
SPI_CLK
PA3
SPI_MISO
DIGITAL POWER
VDD
U10
XL1509-5.0E1
VIN
OUTPUT
FB
ON/OFF
GND
R33
0Ω
C3
22uF
C5
22uF
R30
10kΩ
LED1
KT-0603R
L6
68uH
D2
B5819W_C8598
C4
22uF
C6
22uF
LED2
KT-0603R
TP_1V3
5V
+5V
R31
0Ω
R34
10kΩ
USB-TO-SERIAL BRIDGE
USB2
TYPE-C 16PIN 2MD(073)
SHELL
GND
VBUS
SBU2
CC1
DN2
DP1
DN1
DP2
SBU1
CC2
VBUS
SHELL
GND
VUSB
TP_4
VUSB
USBCC1
USBP
USBN
USBCC2
USB-PD
VUSB
3V3
R20
10K
R24
10K
U6
CH224K
CFG1
CFG2
CFG3
DP
DM
VBUS
CC1
CC2
VDD
PG
GND
R21
1kΩ
C46
1uF
R25
10K
R19
10K
USBCC2
USBCC1
USB_PD_PG
PD STARTUP: 1-1-0 = 5V
PD_ON=LOW: 0-1-0 = 20V
ANALOG POWER #1
U9
XL1509-5.0E1
TP_1V1
5V
+5V_L
R36
0Ω
C11
22uF
C6
22uF
R37
0Ω
L1
68uH
D1
B5819W_C8598
C9
22uF
C10
22uF
ANALOG POWER #2
U11
XL1509-5.0E1
TP_1V2
5V
+5V_R
R39
0Ω
C14
22uF
C23
22uF
R35
0Ω
L2
68uH
D3
B5819W_C8598
C21
22uF
C20
22uF
U8
CH340C
TP_2
3V3
UART_RX
UART_TX
USBP
USBN
TXD
RXD
V3
D+
D-
NC.
VCC
R232
RTS#
DTR#
DCD#
RI#
DSR#
CTS#
C53
100nF
C52
100nF
POWER BYPASS
VUSB
R50
0Ω
TP_5
VDD
TITLE:
Loud Orange Pi
REV: C
Company: Sonocotta
Sheet: 2/2
Date: 2024-03-27
Drawn By: andriy@sonocotta.com
嘉立创EDA