Integration Guide
Bosch Software Environmental Cluster (BSEC)

Modifications reserved | Data subject to change without notice | Document number: BST-BME-Integration-Guide-AN011-3210-00 | Date 2025-04-29
© Bosch Sensortec GmbH 2025. All rights reserved, also regarding any disposal, exploitation, reproduction, editing, distribution, as well as in the event of applications for industrial property rights.

Contents

1 BSEC Integration Guideline **4**
- 1.1 Overview of BME Family Sensors . . . 4
- 1.2 The Environmental Fusion Library BSEC . . . 5
  - 1.2.1 BSEC Library Solutions . . . 5
  - 1.2.2 BSEC Configuration Settings . . . 6
  - 1.2.3 Key Features . . . 8
  - 1.2.4 Supported Virtual Sensor Output Signals . . . 9
- 1.3 Requirements for Integration . . . 10
  - 1.3.1 Hardware . . . 10
  - 1.3.2 Software Framework . . . 10
  - 1.3.3 Physical Input Sensor Signals . . . 11
  - 1.3.4 Build the Solution . . . 11

2 How to integrate BSEC library **12**
- 2.1 Prerequisites . . . 12
- 2.2 Integration of BSEC Interfaces into BME6xy Sensors . . . 12
  - 2.2.1 Example code for BSEC Interfaces . . . 15
- 2.3 Using BSEC 3.x for BME680/688 Sensor Variants . . . 15

3 FAQ **16**
- 3.1 No Output From bsec_do_steps() . . . 16
- 3.2 IAQ output does not change or accuracy remains 0 . . . 16
- 3.3 Error Codes and Corrective Measures . . . 16
  - 3.3.1 Errors Returned by bsec_do_steps() . . . 16
  - 3.3.2 Errors Returned by bsec_update_subscription() . . . 19
  - 3.3.3 Errors Returned by bsec_set_configuration() / bsec_set_state() . . . 23
  - 3.3.4 Errors Returned by bsec_sensor_control() . . . 24
- 3.4 Upgrading from BME688/BME680 sensors to BME690 sensors . . . 25

4 Module Documentation **26**
- 4.1 BSEC Enumerations and Definitions . . . 26
  - 4.1.1 Enumerations . . . 26
  - 4.1.2 Defines . . . 33
- 4.2 BSEC Interfaces . . . 37
  - 4.2.1 Interface Functions . . . 37

5 Data Structure Documentation **45**
- 5.1 bsec_bme_settings_t Struct Reference . . . 45
  - 5.1.1 Detailed Description . . . 45
  - 5.1.2 Field Documentation . . . 46
- 5.2 bsec_input_t Struct Reference . . . 47
  - 5.2.1 Detailed Description . . . 48
  - 5.2.2 Field Documentation . . . 48

© Bosch Sensortec GmbH 2025. All rights reserved, also regarding any disposal, exploitation, reproduction, editing, distribution, as well as in the event of applications for industrial property rights.

5.3 bsec_output_t Struct Reference 49
5.3.1 Detailed Description 49
5.3.2 Field Documentation 49
5.4 bsec_sensor_configuration_t Struct Reference 51
5.4.1 Detailed Description 51
5.4.2 Field Documentation 51
5.5 bsec_version_t Struct Reference 52
5.5.1 Detailed Description 52
5.5.2 Field Documentation 52

© Bosch Sensortec GmbH 2025. All rights reserved, also regarding any disposal, exploitation, reproduction, editing, distribution, as well as in the event of applications for industrial property rights.

1 BSEC Integration Guideline

1.1 Overview of BME Family Sensors

The BME sensor family has been designed to enable pressure, temperature, humidity and gas measurements. The BME690 is the latest addition to the sensor family. It offers improved pressure and humidity sensor performance compared to its predecessors - BME688 and BME680. Additionally, its robust hardware assembly makes it ideal for high condensation applications. The sensors can be operated in different modes specified in supplied header files. In general, higher data rate corresponds to higher power consumption.

This section will provide information about the integrated sensors which are used by the BSEC library and also a brief overview of them.

Temperature Sensor

In order to guarantee fast response times, BME690/BME688 is expected to be mounted at a location in the device that enables good air and temperature exchange. The integrated temperature sensor has been optimized for very low noise and high resolution. It is primarily used for estimating ambient temperature and for temperature compensation of the other sensors present. The temperature measurement accuracy is specified in the corresponding data sheet of the used hardware.

Pressure Sensor

The pressure sensor within BME690/BME688 is an absolute barometric pressure sensor featuring exceptionally high accuracy and resolution at very low noise. The pressure measurement accuracy is specified in the corresponding data sheet.

Relative Humidity Sensor

The humidity sensor within BME690/BME688 measures relative humidity from 0 to 100 percent across a temperature range from -40 degrees centigrade to +85 degrees centigrade. The humidity measurement accuracy is specified in the corresponding data sheet.

Gas Sensor

The gas sensor within BME690/BME688 can detect Volatile Organic Compounds (VOCs), Volatile Sulfer Compounds(VSCs) and other gases such as carbon monoxide and hydrogen.

BME690 has adapted all features of BME688, including the gas scanner function. In standard configuration, the presence of VSCs is being detected as an indicator for e.g. bacteria growth. And the gas scanner can be customized with respect to sensitivity, selectivity, data rate and power consumption as well. The BME AI-Studio tool enables customers to train the BME690/BME688 gas scanner on their specific application, like in home appliances, IoT products or Smart Home.

© Bosch Sensortec GmbH 2025. All rights reserved, also regarding any disposal, exploitation, reproduction, editing, distribution, as well as in the event of applications for industrial property rights.

1.2 The Environmental Fusion Library BSEC

General Description

BSEC fusion library has been conceptualized to provide higher-level signal processing and fusion for the BME sensor. The library receives compensated sensor values from the sensor API. It processes the BME sensor signals (in combination with the additional optional device sensors) to provide the requested sensor outputs. Inputs to BSEC signals are commonly called signals from *physical sensors*. For the outputs of BSEC, several denominations are coined for the name of the sensors providing the respective signal: composite sensors, synthetic sensors, software-based sensors and virtual sensors. For BSEC, only the denomination *virtual sensors* shall be used.

Prior to probing into BSEC Library, the entire BSEC system can be understood as a combination of the below mentioned system architecture components

- BME690/BME688 sensor (pressure, temperature, humidity and gas)
- Device with BME690/BME688 integrated
- Sensor driver API - Provide software interfaces to get compensated raw data from sensor via SPI/I2C interface
- BSEC fusion library - Provides fused sensor outputs and AI interpreter for classifying and quantifying gas related use cases
- BME AI Studio - AI toolchain to develop, verify and deploy custom classification and regression AI models for classifying and quantifying gas related use cases
- *Optional*: Additional device sensors (i.e., temperature of other heat sources in the device or position sensors)

Advantages

- Hardware and software co-design for optimal performance
- Complete software fusion solution
- Eliminates need for developing fusion software in customer's side
- Robust virtual sensor outputs optimized for the application

1.2.1 BSEC Library Solutions

Offered BSEC solutions are

Solution	Included features
SELECTIVITY	Gas classification, gas quantification with regression technique, Index for Air Quality (IAQ), raw signals
IAQ	Index for Air Quality (IAQ), raw signals

The SELECTIVITY(IAQ+SEL) solution is an all in one feature set of BSEC library, which enables the user to subscribe for any one of the three BSEC primary features(i.e. IAQ, Classification or Regression). The IAQ solution on the other hand is a memory efficient variant of BSEC for use cases that does not require the classification and regression features of the library.

Based on customer requests it is technically possible to further customize BSEC to meet specific demands.

© Bosch Sensortec GmbH 2025. All rights reserved, also regarding any disposal, exploitation, reproduction, editing, distribution, as well as in the event of applications for industrial property rights.

1.2.2 BSEC Configuration Settings

BSEC offers the flexibility to configure the solution based on customer specific needs. The configuration can be loaded to BSEC via bsec_set_configuration(). The following settings can be configured

- Supply voltage of the sensor. The supply voltage influences the self-heating of the sensor.
  - 1.8V or 3.3V
- Different power modes for the gas sensor and corresponding data rates are supported by the software solution:
  - Gas Scan mode (scan) is designed for interactive applications where gas classification or regression estimates of the target gases are needed for the use cases. BSEC algorithm has been qualified for identifying H2S gas with classification model and estimating the intensity in parts per million (ppm) of the H2S gas with regression model. The standard heater profile has an update rate of 10.8s and can be finetuned for use-cases using BME AI Studio.
  - Ultra low power (ULP) mode is designed for battery-powered and/or frequency-coupled devices over extended periods of time. This mode features an update rate of 300 seconds and an average current consumption of <0.05 mA
  - Low power (LP) mode that is designed for interactive applications where the air quality is tracked and observed at a higher update rate of 3 seconds with a current consumption of <0.5 mA
  - Continuous(CONT) mode provides an update rate of 1 Hz and shall only be used short-term for use cases that incorporate very fast events or stimulus. This mode has an average current consumption of <12 mA
- The history BSEC considers for the automatic background calibration of the IAQ is in days. That means changes in this time period will influence the IAQ value.
  - 4days, means BSEC will consider the last 4 days of operation for the automatic background calibration.
  - 28days, means BSEC will consider the last 28 days of operation for the automatic background calibration.

Configurations for BSEC library

For Scan mode, the configurations finetuned to the intended application need to be generated from the BME AI Studio. For accurate LP and ULP outputs it is important to use the right configuration file. Please select the most appropriate configuration file from the specific folders provided in the release. The naming convention is as follows: < sensor variant > _ < features > _ < supply voltage > _ < sampling rate > _ < calibration days >.

- < sensor variant > - Specifies the sensors compatible with the configuration.
  - 'bme690', 'bme688' or 'bme680'
- < features > - Indicates the features supported by the configuration.
  - 'sel' - Supports IAQ outputs in LP/ULP mode or classification outputs in scan mode.
  - 'reg' - Supports IAQ outputs in LP/ULP mode or regression outputs in scan mode
  - 'iaq' - Support only IAQ outputs in LP/ULP mode
- < supply voltage > - Denotes the supply voltages to which the configuration is finetuned.
  - '18v' - To be used when the supply volatge is 1.8v.
  - '33v' - To be used when the supply volatge is 3.3v
- < sampling rate > - The sampling rate supported by the configuration.
  - '3s' - For low power mode operations at 3 seconds sampling rate

© Bosch Sensortec GmbH 2025. All rights reserved, also regarding any disposal, exploitation, reproduction, editing, distribution, as well as in the event of applications for industrial property rights.

- '300s' - For ultra low power mode operations at 300 seconds sampling rate
- < calibration days > - Indicates the number of days BSEC consider for automatic background calibration.
  - '4d' - 4 day calibration period.
  - '28d' - 28 day calibration period.

For example, 'bme690_iaq_18v_3s_28d' configuration file is recommended when the users want to use the IAQ Solution of BSEC with BME690 sensor hardware with a supply voltage of 1.8v, while subscribing for LP mode outputs with 28 day calibration time.

For BME690 and BME688 sensors the following configuration sets are available for SELECTIVITY Solution of BSEC library(where bme6XY corresponds to BME690 or BME688):

Configuration	Supply voltage	Max data rate (IAQ)	Calibration time (IAQ)	Gas estimate output class	Regression estimate target
bme6XY_sel↩ _33v_3s_28d	3.3 V	3s	28 days	H2S/NonH2S	-
bme6XY_sel↩ _33v_3s_4d	3.3 V	3s	4 days	H2S/NonH2S	-
bme6XY_sel↩ _18v_3s_28d	1.8V	3s	28 days	H2S/NonH2S	-
bme6XY_sel↩ _18v_3s_4d	1.8V	3s	4 days	H2S/NonH2S	-
bme6XY_sel↩ _33v_300s_↩ 28d	3.3 V	300s	28 days	H2S/NonH2S	-
bme6XY_sel↩ _33v_300s_4d	3.3 V	300s	4 days	H2S/NonH2S	-
bme6XY_sel↩ _18v_300s_↩ 28d	1.8V	300s	28 days	H2S/NonH2S	-
bme6XY_sel↩ _18v_300s_4d	1.8V	300s	4 days	H2S/NonH2S	-
bme6XY_reg↩ _18v_300s_4d	1.8V	300s	4 days	-	H2S (ppm)

For BME690, BME688 and BME680 sensors the following configuration sets are available for IAQ Solution of BSEC library(where bme6XY corresponds to BME690 or BME688 or BME680):

Configuration	Supply voltage	Max data rate (IAQ)	Calibration time (IAQ)
bme6XY_iaq_33v_3s_28d	3.3 V	3s	28 days
bme6XY_iaq_33v_3s_4d	3.3 V	3s	4 days
bme6XY_iaq_18v_3s_28d	1.8V	3s	28 days
bme6XY_iaq_18v_3s_4d	1.8V	3s	4 days
bme6XY_iaq_33v_300s_28d	3.3 V	300s	28 days
bme6XY_iaq_33v_300s_4d	3.3 V	300s	4 days
bme6XY_iaq_18v_300s_28d	1.8V	300s	28 days
bme6XY_iaq_18v_300s_4d	1.8V	300s	4 days

© Bosch Sensortec GmbH 2025. All rights reserved, also regarding any disposal, exploitation, reproduction, editing, distribution, as well as in the event of applications for industrial property rights.

Note:

- The built-in LP/ULP mode configuration of IAQ solution and Selectivity solution settings in BSEC library when no external configuration file is used can be 'bme690_iaq_18v_300s_4d' and 'bme690_sel_18v_300s_4d' respectively.
- It is mandatory to provide configuration setting for getting outputs in scan mode, else output will be all zeros.
- Users can update the settings for gas classification and regression estimation using BME AI-Studio. For a BME AI-Studio generated configuration file, the default settings for all outputs other than gas classification and regression estimate outputs are based on 'bme688_sel_18v_300s_28d' file settings.
- BSEC support a maximum of 4 classes for gas classification outputs. However above mentioned configuration settings is defined for only two classes.
- BSEC support a maximum of 4 target gases for regression estimate outputs as well, and the above mentioned configuration settings is defined for only one target gas.

1.2.3 Key Features

- Precise calculation of sensor heat compensated temperature outside the device
- Precise calculation of sensor heat compensated relative humidity outside the device
- Precise calculation of atmospheric pressure outside the device
- Precise calculation of Index for Air Quality(IAQ) level outside the device
- Provide the probability of the detected target gas(eg: H2S, nonH2S) class
- Provide the quantification of the target gas by regression method (eg.: 0.1ppm H2S, 0.5ppm H2S etc.)
- A conditioning mechanism with LP and ULP modes to avoid prolonged power-on stabilization time.

Selectivity Mode with BME690/BME688

- Generally the idea of the gas scanner is to collect as much information of the present gas mixture. The intelligent AI model of BSEC then establishes a correlation between the collected gas data and the ground truth information provided by the user. Subsequently, when the sensor encounters the same gas composition again, BSEC efficiently identifies and associates it with the reference used during training.
- For the state of the art classification feature, BSEC requires the label/class names as reference, such as 'Gas'-'No-Gas', 'Low'-'Moderate'-'High ' etc.
- On the other hand, the regression feature of BSEC utilizes the numerical relationship of the gas environment as a reference to provide a quantitative estimation similar to the reference value. This feature leverages continuous sensor data instead of a range of data, making it suitable for applications in controlled environments like laboratories, server rooms etc., where external gases and other environmental changes are limited.
- At a time, only one of the feature can be enabled: gas estimation or regression estimation in scan mode. Both are not available together.
- Under this mode of operation, the heater is operated under multiple temperature points and a maximum of 10 heater points is supported by the library.
- The Selectivity feature of BSEC library is a platform that could be customized as per different usecases. The BME AI Studio tool is used to configure the BME sensor and train BSEC AI Model as per the requirement of the user.

© Bosch Sensortec GmbH 2025. All rights reserved, also regarding any disposal, exploitation, reproduction, editing, distribution, as well as in the event of applications for industrial property rights.

1.2.4 Supported Virtual Sensor Output Signals

BSEC provides the output signals given in the table below. All signals from virtual sensor outputs are time-continuous signals sampled in equidistant time intervals.

Signal name	Min	Max	Unit	Acc [1]	Supporting Modes [2]
BSEC_OUTPUT_GAS_ESTIMATE_1	0.00	1	probability [3]	yes	scan
BSEC_OUTPUT_GAS_ESTIMATE_2	0.00	1	probability [3]	yes	scan
BSEC_OUTPUT_GAS_ESTIMATE_3	0.00	1	probability [3]	yes	scan
BSEC_OUTPUT_GAS_ESTIMATE_4	0.00	1	probability [3]	yes	scan
BSEC_OUTPUT_REGRESSION_E↩STIMATE_1	0	-	-	yes	scan
BSEC_OUTPUT_REGRESSION_E↩STIMATE_2	0	-	-	yes	scan
BSEC_OUTPUT_REGRESSION_E↩STIMATE_3	0	-	-	yes	scan
BSEC_OUTPUT_REGRESSION_E↩STIMATE_4	0	-	-	yes	scan
BSEC_OUTPUT_RAW_PRESSURE	30000	110000	Pa	no	ULP,LP,CONT,scan
BSEC_OUTPUT_RAW_TEMPERAT↩URE	-40	85	deg C	no	ULP,LP,CONT,scan
BSEC_OUTPUT_RAW_HUMIDITY	0	100	%	no	ULP,LP,CONT,scan
BSEC_OUTPUT_RAW_GAS	170	103000000	Ohm	no	ULP,LP,CONT,scan
BSEC_OUTPUT_RAW_GAS_INDEX	0	9		no	scan
BSEC_OUTPUT_IAQ	0	500		yes	ULP,LP,CONT
BSEC_OUTPUT_STATIC_IAQ	0	-		yes	ULP,LP,CONT
BSEC_OUTPUT_CO2_EQUIVALENT	400	-	ppm	yes	ULP,LP,CONT
BSEC_OUTPUT_COMPENSATED_↩GAS	2.23	8.01	ohm	no	ULP,LP,CONT
BSEC_OUTPUT_BREATH_VOC_E↩QUIVALENT	0	10000	ppm	yes	ULP,LP,CONT
BSEC_OUTPUT_SENSOR_HEAT_↩COMPENSATED_TEMPERATURE	-45	85	deg C	no	ULP,LP,CONT
BSEC_OUTPUT_SENSOR_HEAT_↩COMPENSATED_HUMIDITY	0	100	%	no	ULP,LP,CONT
BSEC_OUTPUT_STABILIZATION_↩STATUS	False	True		no	ULP,LP,CONT
BSEC_OUTPUT_RUN_IN_STATUS	False	True		no	ULP,LP,CONT
BSEC_OUTPUT_GAS_PERCENTA↩GE	0	100	%	yes	ULP,LP,CONT
BSEC_OUTPUT_TVOC_EQUIVALE↩NT	0	-	ppb	yes	LP

To achieve best gas sensor performance, the user shall not switch between different modes during the lifetime of a given sensor.

© Bosch Sensortec GmbH 2025. All rights reserved, also regarding any disposal, exploitation, reproduction, editing, distribution, as well as in the event of applications for industrial property rights.

[1] Accuracy status available (see bsec_output_t::accuracy).

The IAQ accuracy indicator will notify the user when she/he should initiate a calibration process. Calibration is performed in the background if the sensor is exposed to clean or polluted air for approximately 30 minutes each.

[2] The sample rate of ULP, LP, CONT and scan mode are 1/300Hz, 1/3Hz, 1Hz and 1/18Hz respectively.

[3] Probability denotes the range 0.00-1

1.3 Requirements for Integration

1.3.1 Hardware

BSEC was specifically designed to work together with Bosch environmental sensor of the BME6xy family. No other sensors are supported. To ensure a consistent performance, the sensors shall be configured by BSEC itself by the use of the bsec_sensor_control() interface.

1.3.2 Software Framework

The framework must provide the sample rates requested by the user for the virtual sensors to BSEC via bsec_update_subscription(), e.g., using an application on the end-user graphical interface like an Android application. BSEC internally configures itself according to the requested output sample rates. The framework must then use bsec_sensor_control() periodically to configure the BME6xy family sensor. After every call to bsec_sensor_control(), the next call to bsec_sensor_control() should be scheduled by the framework as specified in the returned sensor settings structure.

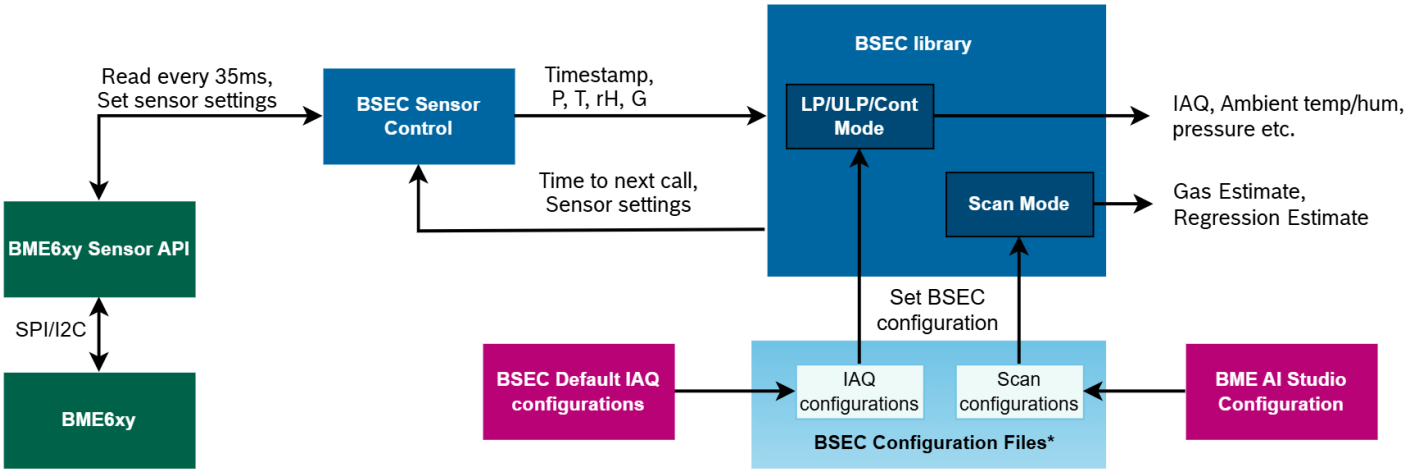

Figure 1.1: BSEC Overview

* Refer Configurations for BSEC library for modes and configurations supported by the sensors.

Typical durations for the "Sleep until measurement is finished" are 0.100 seconds for LP mode, 1 second for ULP mode, 0.9 seconds for CONT mode and 0.190 seconds for scan mode. Typical durations for the "Sleep until next time bsec_sensor_control() asked to be called" are 2.9 seconds for LP mode, 299 seconds for ULP mode, 0.1

© Bosch Sensortec GmbH 2025. All rights reserved, also regarding any disposal, exploitation, reproduction, editing, distribution, as well as in the event of applications for industrial property rights.

seconds for CONT mode, 35ms for ON scan cyle of scan mode and sleep duration for OFF scan cycle for scan mode. Sleep duration for scan mode is as configured in case of the selected temperature profiles. Typically sleep duration is the multiplication of total profile duration and number of OFF scan cycle. Sleep duration of standard heater profile (Heater Profile #354 with 5/10 duty cycle) is 107.8 seconds.

For each input data, an exact time stamp shall be provided synchronized to each other when they belong to the same instant in time, i.e., they are "aligned". The processing function requires at least one input signal.In selectivity mode, more than 1 data could be read from sensor using 3 member FIFO, which could be passed with same timestamp but with different BSEC_INPUT_PROFILE_PART updated.

1.3.3 Physical Input Sensor Signals

BSEC is designed to be used exclusively together with sensors of the BME6xy family, BME690/BME688/BME680.

Moreover, ambient temperature and humidity estimation may require additional inputs from the host system to compensate for self-heating effects caused by the operation of the host device. This may include information such as supply voltage, charging status or display status.

1.3.4 Build the Solution

BSEC is delivered as a pre-compiled static library to be linked against the host integration code. The library includes the following header files which need to be included along with BSEC library package.

Header file	Description
bsec_datatypes.h	Data types and defines used by interface functions
bsec_interface.h	Declaration of BSEC interface functions

© Bosch Sensortec GmbH 2025. All rights reserved, also regarding any disposal, exploitation, reproduction, editing, distribution, as well as in the event of applications for industrial property rights.

2 How to integrate BSEC library

This section describes how you can integrate BSEC library into your own environment and prerequisites for its integration into frameworks on supported platforms. Furthermore, a brief explanation of sequence of API calls with example code is also provided.

2.1 Prerequisites

First of all, you require a BME sensor that is connected to a microcontroller (MCU). The MCU will be used to control the operation of the sensor and to process the sensor signals. Of course, you will also need a development environment for the MCU of your choice. Key software tools for BME sensors are listed below-

Software components	Type	Function
BME6xy senor API	C code	Provide software interfaces to get compensated raw data from sensor via SPI/I2C interface
BSEC	C static library	Provides fused sensor outputs and AI interpreter for classifying and quantifying gas related use cases
BME AI Studio	PC Aplication	AI toolchain to develop, verify and deploy custom classification and regression AI models for classifying and quantifying gas related use case.

2.2 Integration of BSEC Interfaces into BME6xy Sensors

Integration of BSEC library into BME6xy sensors requires following the below mentioned steps-

Steps	Function	APIs to be called
Initialization of BME6xy sensor	Initialization of sensor	BME690: bme69x_init() Refer BME69x-senor-API BME68x: bme68x_init() Refer BME68x-senor-API
Initialization of the BSEC library	Initialization of library Update configuration settings (optional) Restore state of library (optional)	bsec_init() bsec_set_configuration() bsec_set_state()
Subscribe ouputs	Enable library outputs with specified mode	bsec_update_subscription()
Signal processing with BSEC library	Retrieve BME690 sensor instructions Main signal processing function	bsec_sensor_control() bsec_do_steps()
Retrieval of BSEC library state on power cycle	Retrieve the current internal library state (optional)	bsec_get_state()

© Bosch Sensortec GmbH 2025. All rights reserved, also regarding any disposal, exploitation, reproduction, editing, distribution, as well as in the event of applications for industrial property rights.

BSEC Interface Sequence

For reliable operation of BSEC software, the following sequence need to be followed.

Initialization of BME6xy sensors and BSEC instances

The primary step for any application is initialzing the BME sensors and BSEC software. As BSEC supports multi-interface feature by default, one or more BME6xy sensors of same sensor variant could be integrated to a single application code. For each sensor, seperate BSEC instance need to be initialzied as well. The maximum number of instances is limited only by the memory of the MCU used.

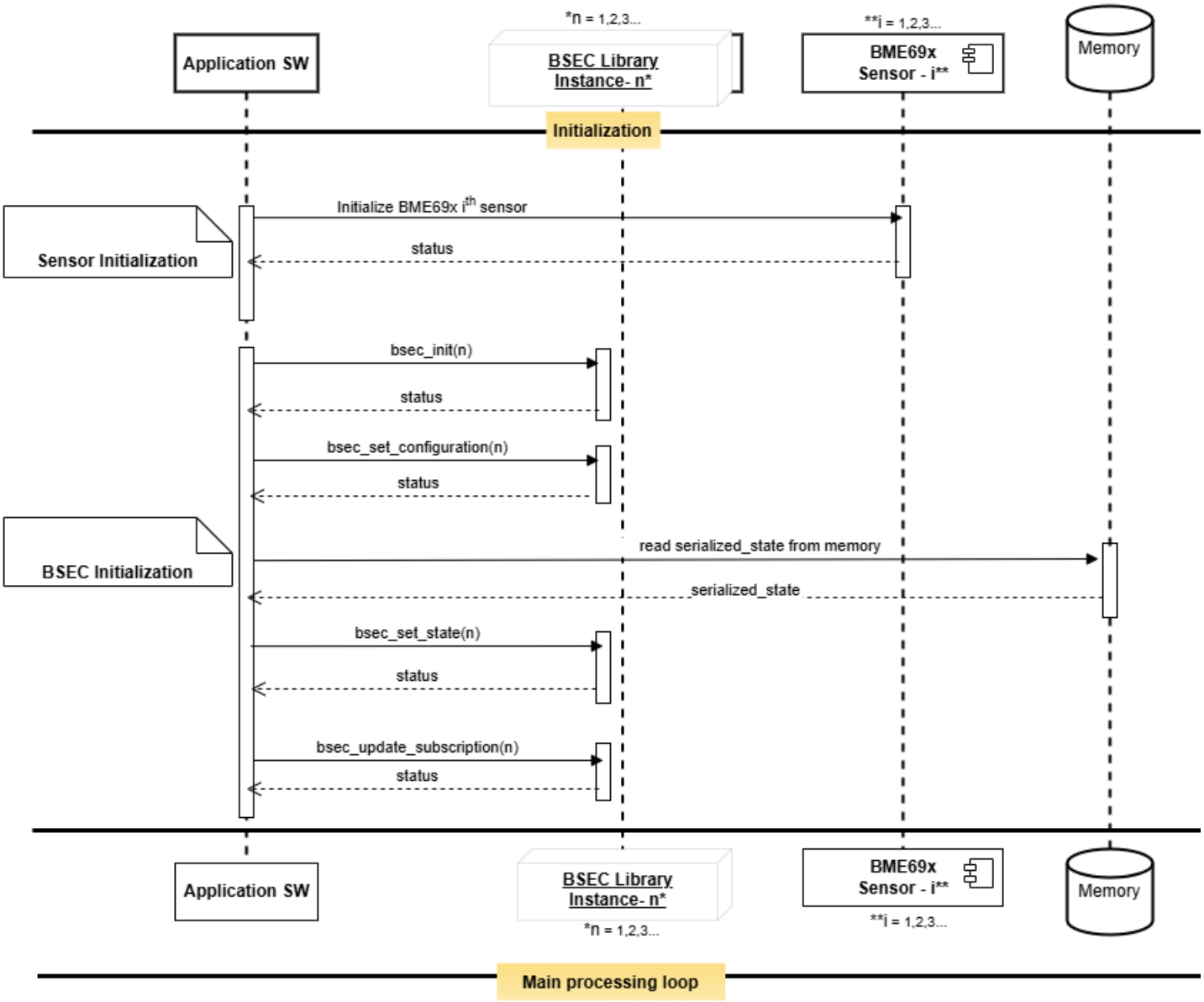

Figure 2.1: Initialization Sequence Diagram

© Bosch Sensortec GmbH 2025. All rights reserved, also regarding any disposal, exploitation, reproduction, editing, distribution, as well as in the event of applications for industrial property rights.

BSEC processing

As per the application and configuration loaded, the BME690 sensor data need to be fed to BSEC at defined sample rates for getting the subscribed outputs from the software.

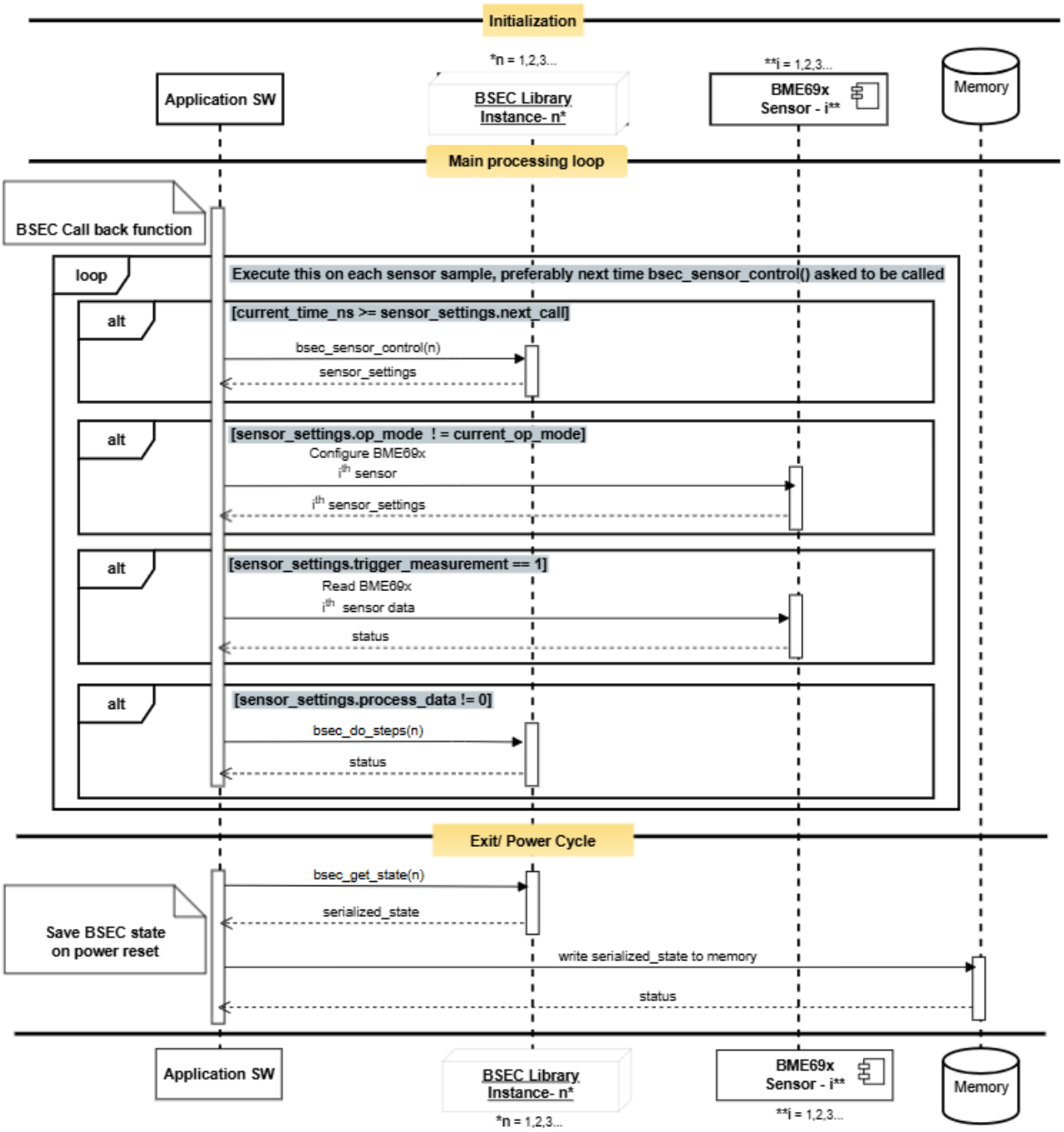

Figure 2.2: BSEC Processing Sequence Diagram

Note: Please refer to bsec_interface.h for detailed description, interface definitions and sample usage of above-mentioned APIs

© Bosch Sensortec GmbH 2025. All rights reserved, also regarding any disposal, exploitation, reproduction, editing, distribution, as well as in the event of applications for industrial property rights.

2.2.1 Example code for BSEC Interfaces

For easy integration and demo purpose, BSEC comes with example code illustrating its features. Please refer the "examples\BSEC_Integration_Examples\README.md" for prerequisites and instructions for using those examples in Bosch APP boards.

Example code	Description	Source
bsec_iot_example.c	Reference example code for using the BSEC library in a custom setup	BSEC 3.x Package from BME690 Software

2.3 Using BSEC 3.x for BME680/688 Sensor Variants

The BSEC 3.x package includes example code in C, named IOT_Example_Code, which is compatible with the BME690 sensor shuttles on the Application Board 3.1. If you would like to use BSEC 3.x with older sensor variants, please refer to the older IOT_Example_Code available with BSEC 2.x and make a few changes.

Changes in BSEC 3.x Interface

- bsec_interface.h by default supports multiple instances. Users can now define one or more instances.
- BSEC API calls are now standardized, and the multi-instance extensions have been removed from the API names (e.g., bsec_init_m() is now bsec_init()).

Note: The standard interfaces of BSEC 2.x are no more supported. Please refer to bsec_interface.h for detailed description, interface definitions and sample usage of all the APIs

© Bosch Sensortec GmbH 2025. All rights reserved, also regarding any disposal, exploitation, reproduction, editing, distribution, as well as in the event of applications for industrial property rights.

3 FAQ

3.1 No Output From bsec_do_steps()

Possible reasons:

- The virtual sensor was not enabled via bsec_update_subscription()
- The input signals required for that virtual sensor were not provided to bsec_do_steps()
- The timestamps passed to bsec_do_steps() are duplicated or are not in nanosecond resolution

3.2 IAQ output does not change or accuracy remains 0

Possible reason:

- Timing of gas measurements is not within 6.25% of the target values. For example, when running the sensor in low-power mode the intended sample period is 3 s. In this case the difference between two consecutive measurements must not exceed 106.25% of 3 s which is 3.1875 s. When integrating BSEC, it is crucial to strictly follow the timing between measurements as returned by bsec_sensor_control() in the bsec_sensor_↩settings_t::next_call field.

Correction method:

- Ensure accurate timestamps with ns resolution, especially avoid overflows of the timer or issues with 64-bit arrithmetic
- Ensure that the bsec_sensor_control() and bsec_do_steps() loop is correctly implemented and the bsec_↩sensor_settings_t::next_call field is used to determine the frequency between measurements.

3.3 Error Codes and Corrective Measures

This chapter will give possible possible correction methods in order to fix the issues mentioned below. An overview of the error codes is given in bsec_library_return_t.

3.3.1 Errors Returned by bsec_do_steps()

3.3.1.1 BSEC_E_DOSTEPS_INVALIDINPUT

Possible reasons:

- General description: BSEC_E_DOSTEPS_INVALIDINPUT
- The sensor id of the input (physical) sensor passed to bsec_do_steps() is not in valid range or not valid for the requested output (virtual) sensor.

© Bosch Sensortec GmbH 2025. All rights reserved, also regarding any disposal, exploitation, reproduction, editing, distribution, as well as in the event of applications for industrial property rights.

- The number of inputs passed to bsec_do_steps() is greater than the actual number of populated input structs.

  E.g:

```
inputs[0].sensor_id = 100;
inputs[0].signal = 25;
inputs[0].time_stamp= ts;
n_inputs = 3;
status = bsec_do_steps(inputs, n_inputs, outputs, &n_outputs);
```

Correction methods:

- The sensor_id field in the inputs structure passed to bsec_do_steps() should be one among the input (physical) sensors ids returned from bsec_update_subscription() stored in required_sensor_settings array.
- The sensor_id field in the inputs structure passed to bsec_do_steps() should be in the range of bsec_physical↩_sensor_t enum.
- n_inputs should be equal to the number of inputs passed to bsec_do_steps(),i.e. size of inputs structure array.

3.3.1.2 BSEC_E_DOSTEPS_VALUELIMITS

Possible reasons:

- General description: BSEC_E_DOSTEPS_VALUELIMITS
- The value of the input (physical) sensor signal passed to bsec_do_steps() is not in the valid range.

  E.g:

```
inputs[0].sensor_id = BSEC_INPUT_TEMPERATURE;
inputs[0].signal = 250;
inputs[0].time_stamp= ts;
n_inputs = 1;
status = bsec_do_steps(inputs, n_inputs, outputs, &n_outputs);
```

Correction methods:

- The value of signal field in the inputs structure passed to bsec_do_steps() should be in a valid range. The allowed input value range for the sensors is listed below.
  - TEMPERATURE (-40 to 85)
  - HUMIDITY (0 to 100)
  - PRESSURE (300 to 110000)
  - GASRESISTOR (170 to 103000000)
  - PROFILE_PART (0 to 9)
  - Other Sensors (-3.4028e+38 to +3.4028e+38)

© Bosch Sensortec GmbH 2025. All rights reserved, also regarding any disposal, exploitation, reproduction, editing, distribution, as well as in the event of applications for industrial property rights.

3.3.1.3 BSEC_E_DOSTEPS_DUPLICATEINPUT

Possible reasons:

- General description: BSEC_E_DOSTEPS_DUPLICATEINPUT
- Duplicate input (physical) sensor ids are passed to bsec_do_steps().

  E.g:

```
inputs[0].sensor_id = BSEC_INPUT_TEMPERATURE;
inputs[0].signal = 25;
inputs[0].time_stamp= ts;
inputs[1].sensor_id = BSEC_INPUT_TEMPERATURE;
inputs[1].signal = 30;
inputs[1].time_stamp= ts;
n_inputs = 2;
status = bsec_do_steps(inputs, n_inputs, outputs, &n_outputs);
```

Correction methods:

- Each input (physical) sensor id passed to bsec_do_steps() should be unique.

3.3.1.4 BSEC_I_DOSTEPS_NOOUTPUTSRETURNABLE

Possible reasons:

- General description: BSEC_I_DOSTEPS_NOOUTPUTSRETURNABLE
- Some virtual sensors are requested, but no memory is allocated to hold the returned output values corresponding to these virtual sensors from bsec_do_steps().

  E.g:

```
n_outputs=0; /*Requested number of virtual sensor is 5*/
status = bsec_do_steps(inputs, n_inputs, outputs, &n_outputs);
```

Correction methods:

- n_outputs should be assigned the value equal to the maximum number of virtual sensors defined in bsec_virtual_sensor_t enum.

3.3.1.5 BSEC_W_DOSTEPS_EXCESSOUTPUTS

Possible reasons:

- General description: BSEC_W_DOSTEPS_EXCESSOUTPUTS
- Some virtual sensors are requested, but not enough memory is allocated to hold the returned output values corresponding to these virtual sensors from bsec_do_steps().

  E.g:

```
n_outputs = 2 ; /*Requested number of virtual sensor is 5*/
status=bsec_do_steps(inputs, n_inputs, outputs, &n_outputs);
```

Correction methods:

- n_outputs should be assigned the value equal to the maximum number of virtual sensors defined in bsec_virtual_sensor_t enum.

© Bosch Sensortec GmbH 2025. All rights reserved, also regarding any disposal, exploitation, reproduction, editing, distribution, as well as in the event of applications for industrial property rights.

3.3.1.6 BSEC_W_DOSTEPS_TSINTRADIFFOUTOFRANGE

Possible reasons:

- General description: BSEC_W_DOSTEPS_TSINTRADIFFOUTOFRANGE
- Current timestamp of the inputs passed to bsec_do_steps() is same as the previous one stored for the same inputs.

Correction methods:

- time_stamp field of the inputs structure passed to bsec_do_steps() should be unique.

3.3.2 Errors Returned by bsec_update_subscription()

3.3.2.1 BSEC_E_SU_WRONGDATARATE

Possible reasons:

- General description: BSEC_E_SU_WRONGDATARATE
- Virtual sensors are requested with a sampling rate which is not allowed, e.g. 100 Hz.

  E.g:

```
requested_virtual_sensors[virtual_sensor_count].sample_rate = 100;
requested_virtual_sensors[virtual_sensor_count].sensor_id = BSEC_OUTPUT_RAW_GAS;
status = bsec_update_subscription(requested_virtual_sensors,
      n_requested_virtual_sensors, required_sensor_settings, &n_required_sensor_settings);
```

Correction methods:

- The sample_rate field in the requested_virtual_sensors structure passed to bsec_update_subscription() should match with the sampling rate defined for that sensor. The allowed sampling rate(s) in hertz for each sensor is listed in this table.

3.3.2.2 BSEC_E_SU_SAMPLERATELIMITS

Possible reasons:

- General description: BSEC_E_SU_SAMPLERATELIMITS
- Virtual sensors are requested with an incorrect sampling rate.

  E.g:

```
requested_virtual_sensors[virtual_sensor_count].sample_rate = 5;
requested_virtual_sensors[virtual_sensor_count].sensor_id = BSEC_OUTPUT_RAW_GAS;
 status=bsec_update_subscription(requested_virtual_sensors,
      n_requested_virtual_sensors, required_sensor_settings, &n_required_sensor_settings);
```

Correction methods:

- The sample_rate field in the requested_virtual_sensors structure passed to bsec_update_subscription() should match with the sampling rate defined for that sensor. The allowed sampling rate(s) in hertz for each sensor is listed in this table.

© Bosch Sensortec GmbH 2025. All rights reserved, also regarding any disposal, exploitation, reproduction, editing, distribution, as well as in the event of applications for industrial property rights.

3.3.2.3 BSEC_E_SU_DUPLICATEGATE

Possible reasons:

- General description: BSEC_E_SU_DUPLICATEGATE
- Duplicate virtual sensors are requested through bsec_update_subscription() function.

  E.g:

```
requested_virtual_sensors[virtual_sensor_count].sample_rate = 1;
requested_virtual_sensors[virtual_sensor_count].sensor_id = BSEC_OUTPUT_RAW_GAS;
virtual_sensor_count++;
requested_virtual_sensors[virtual_sensor_count].sample_rate = 1;
requested_virtual_sensors[virtual_sensor_count].sensor_id = BSEC_OUTPUT_RAW_GAS;
status = bsec_update_subscription(requested_virtual_sensors,
      n_requested_virtual_sensors, required_sensor_settings ,&n_required_sensor_settings);
```

Correction methods:

- The sensor_id field in the requested_virtual_sensors structure passed to bsec_update_subscription() should be unique.

3.3.2.4 BSEC_E_SU_INVALIDSAMPLERATE

Possible reasons:

- General description: BSEC_E_SU_INVALIDSAMPLERATE
- The sampling rate of the requested virtual sensors in not within the valid limit.

  E.g:

```
requested_virtual_sensors[virtual_sensor_count].sample_rate = 100;
requested_virtual_sensors[virtual_sensor_count].sensor_id = BSEC_OUTPUT_RAW_GAS;
status = bsec_update_subscription(requested_virtual_sensors,
      n_requested_virtual_sensors, required_sensor_settings, &n_required_sensor_settings);
```

Correction methods:

- The sample_rate field in the requested_virtual_sensors structure passed to bsec_update_subscription() should match with the sampling rate defined for that sensor. The allowed sampling rate(s) in hertz for each sensor is listed in this table.

3.3.2.5 BSEC_E_SU_GATECOUNTEXCEEDSARRAY

Possible reasons:

- General description: BSEC_E_SU_GATECOUNTEXCEEDSARRAY
- Enough memory is not allocated to hold the returned physical sensor data from bsec_update_subscription().

  E.g:

```
n_required_sensor_settings = 0;
status = bsec_update_subscription(requested_virtual_sensors,
      n_requested_virtual_sensors, required_sensor_settings, &n_required_sensor_settings);
```

Correction methods:

- n_required_sensor_settings passed to bsec_update_subscription() should be equal to BSEC_MAX_PHYSICAL_SENSOR.

© Bosch Sensortec GmbH 2025. All rights reserved, also regarding any disposal, exploitation, reproduction, editing, distribution, as well as in the event of applications for industrial property rights.

3.3.2.6 BSEC_E_SU_SAMPLINTVLINTEGERMULT

Possible reasons:

- General description: BSEC_E_SU_SAMPLINTVLINTEGERMULT
- The sampling rate of an output requested via bsec_update_subscription() is not an integer multiple of the other active sampling rates.

Correction methods:

- Use one of the sampling rates listed in this table.

3.3.2.7 BSEC_E_SU_MULTGASSAMPLINTVL

Possible reasons:

- General description: BSEC_E_SU_MULTGASSAMPLINTVL
- The sampling rate of the requested output requires the gas sensor, which is currently running at a different sampling rate.

Correction methods:

- The outputs that require the gas sensor must have equal sampling rates.

3.3.2.8 BSEC_E_SU_HIGHHEATERONDURATION

Possible reasons:

- General description: BSEC_E_SU_HIGHHEATERONDURATION
- The sampling period of the requested output is lower than the duration of a complete measurement.

Correction methods:

- Use a slower sampling rate.

3.3.2.9 BSEC_W_SU_UNKNOWNOUTPUTGATE

Possible reasons:

- General description: BSEC_W_SU_UNKNOWNOUTPUTGATE
- Requested virtual sensor id is not valid.
- Number of virtual sensors passed to bsec_update_subscription() is greater than the actual number of output(virtual) sensors requested.

  E.g:

```
requested_virtual_sensors[virtual_sensor_count].sample_rate =  1;
requested_virtual_sensors[virtual_sensor_count].sensor_id = 100;

n_requested_virtual_sensors = 3;
status = bsec_update_subscription(requested_virtual_sensors,
      n_requested_virtual_sensors, required_sensor_settings, &n_required_sensor_settings);
```

Correction methods:

- The sensor_id field in the requested_virtual_sensors structure passed to bsec_update_subscription() should be in the range of bsec_virtual_sensor_t enum.

© Bosch Sensortec GmbH 2025. All rights reserved, also regarding any disposal, exploitation, reproduction, editing, distribution, as well as in the event of applications for industrial property rights.

- n_requested_virtual_sensors should be equal to the number of output (virtual) sensors requested through bsec_update_subscription() i.e. size of requested_virtual_sensors structure array.

3.3.2.10 BSEC_W_SU_SAMPLERATEMISMATCH

Possible reasons:

- General description: BSEC_W_SU_SAMPLERATEMISMATCH
- The subscribed sample rate for the outputs are not matching with the configured sampling rate

Correction methods:

- To ensure proper operation keep configured sample rate as same as outputs subscription rate.

3.3.2.11 BSEC_I_SU_SUBSCRIBEDOUTPUTGATES

Possible reasons:

- General description: BSEC_I_SU_SUBSCRIBEDOUTPUTGATES
- No output (virtual) sensor requested through bsec_update_subscription()
- Number of requested output (virtual) sensors passed to bsec_update_subscription() is zero even when there are some output (virtual) sensors requested.

  E.g:

```
requested_virtual_sensors[virtual_sensor_count].sample_rate =  1/300;
requested_virtual_sensors[virtual_sensor_count].sensor_id = BSEC_OUTPUT_RAW_GAS;
n_requested_virtual_sensors = 0;
status = bsec_update_subscription(requested_virtual_sensors,
      n_requested_virtual_sensors, required_sensor_settings, &n_required_sensor_settings);
```

Correction methods:

- requested_virtual_sensors structure to bsec_update_subscription() should be populated with the data of the required output (virtual) sensors. It should not be empty.
- n_requested_virtual_sensors should be equal to the number of output (virtual) sensors requested via bsec_update_subscription(), i.e., size of requested_virtual_sensors structure array. It should not be zero.

3.3.2.12 BSEC_W_SU_MODINNOULP

Possible reasons:

- General description: BSEC_W_SU_MODINNOULP
- Triggering measurement on demand (MOD) in non-ULP mode

Correction methods:

- Ensure that sensors are running in ULP mode or enable ULP mode using bsec_update_subscription() before triggering MOD

© Bosch Sensortec GmbH 2025. All rights reserved, also regarding any disposal, exploitation, reproduction, editing, distribution, as well as in the event of applications for industrial property rights.

3.3.3 Errors Returned by bsec_set_configuration() / bsec_set_state()

3.3.3.1 BSEC_E_CONFIG_VERSIONMISMATCH

Possible reasons:

- General description: BSEC_E_CONFIG_VERSIONMISMATCH
- Version mentioned in the configuration string or state string passed to bsec_set_configuration() or bsec_set_state(), respectively, does not match with the current version.

Correction methods:

- Obtain a compatible string.
- A call to bsec_get_version() would give the current version information.

3.3.3.2 BSEC_E_CONFIG_FEATUREMISMATCH

Possible reasons:

- General description: BSEC_E_CONFIG_FEATUREMISMATCH
- Enabled features encoded in configuration/state strings passed to bsec_set_configuration() / bsec_set_state() does not match with current library implementation or subscribed outputs.

Correction methods:

- Ensure the configuration/state strings generated for current library implementation is passed to bsec_set_configuration() / bsec_set_state() also check that only GAS_ESTIMATE outputs are subscribed or enabled with configuration for classification, and not REGRESSION_ESTIMATE outputs and vise-versa.

3.3.3.3 BSEC_E_CONFIG_CRCMISMATCH

Possible reasons:

- General description: BSEC_E_CONFIG_CRCMISMATCH
- Difference in configuration/state strings passed to bsec_set_configuration() / bsec_set_state() from what is generated for current library implementation.
- String was corrupted during storage or loading.
- String was truncated.
- String is shorter than the size argument provided to the setter function.

Correction methods:

- Ensure the configuration/state strings generated for current library implementation is passed to bsec_set_configuration() / bsec_set_state().

3.3.3.4 BSEC_E_CONFIG_EMPTY

Possible reasons:

- General description: BSEC_E_CONFIG_EMPTY
- String passed to the setter function is too short to be able to be a valid string.

© Bosch Sensortec GmbH 2025. All rights reserved, also regarding any disposal, exploitation, reproduction, editing, distribution, as well as in the event of applications for industrial property rights.

Correction methods:

- Obtain a valid config string.

3.3.3.5 BSEC_E_CONFIG_INSUFFICIENTWORKBUFFER

Possible reasons:

- General description: BSEC_E_CONFIG_INSUFFICIENTWORKBUFFER
- Length of work buffer passed to bsec_set_configuration() or bsec_set_state() is less than required value.
- Length of work buffer passed to bsec_get_configuration() or bsec_get_state() is less than required value.

Correction methods:

- Value of n_work_buffer_size passed to bsec_set_configuration() and bsec_set_state() should be assigned the maximum value BSEC_MAX_PROPERTY_BLOB_SIZE.
- Value of n_work_buffer passed to bsec_get_configuration() and bsec_get_state() should be assigned the maximum value BSEC_MAX_PROPERTY_BLOB_SIZE.

3.3.3.6 BSEC_E_CONFIG_INVALIDSTRINGSIZE

Possible reasons:

- General description: BSEC_E_CONFIG_INVALIDSTRINGSIZE
- String size encoded in configuration/state strings passed to bsec_set_configuration() / bsec_set_state() does not match with the actual string size n_serialized_settings/n_serialized_state passed to these functions.

Correction methods:

- Ensure the configuration/state strings generated for current library implementation is passed to bsec_set_configuration() / bsec_set_state().

3.3.3.7 BSEC_E_CONFIG_INSUFFICIENTBUFFER

Possible reasons:

- General description: BSEC_E_CONFIG_INSUFFICIENTBUFFER
- Value of n_serialized_settings_max/n_serialized_state_max passed to bsec_get_configuration() / bsec_get_state() is insufficient to hold serialized data from BSEC library.

Correction methods:

- Value of n_serialized_settings_max/n_serialized_state_max passed to bsec_get_configuration() / bsec_get_state() should be equal to BSEC_MAX_PROPERTY_BLOB_SIZE.

3.3.4 Errors Returned by bsec_sensor_control()

3.3.4.1 BSEC_W_SC_CALL_TIMING_VIOLATION

Possible reasons:

- General description: BSEC_W_SC_CALL_TIMING_VIOLATION

© Bosch Sensortec GmbH 2025. All rights reserved, also regarding any disposal, exploitation, reproduction, editing, distribution, as well as in the event of applications for industrial property rights.

- The timestamp at which bsec_sensor_control(timestamp) is called differs from the target timestamp which was returned during the previous call in the .next_call struct member by more than 6.25%.

Correction methods:

- Ensure that your system calls bsec_sensor_control() at the time instructed in the previous call.
- To ensure proper operation, a maximum jitter of 6.25% is allowed.

3.4 Upgrading from BME688/BME680 sensors to BME690 sensors

Applicable users:

- BME688/BME680 customers who want to upgrade to BME690 sensors with BSEC 3.x support.

Changes required:

- Update the sensor API calls which includes replacing 'bme68x' keywords to 'bme69x'.
- For customers who are using multi-interface functionality of BSEC 2.x, refer Using BSEC 3.x for BME680/688 Sensor Variants for updating to BSEC 3.x interface.
- Customers who are using the Standard interface functions of BSEC 2.x need to refactor their application code as per upgraded BSEC 3.x interface function.

© Bosch Sensortec GmbH 2025. All rights reserved, also regarding any disposal, exploitation, reproduction, editing, distribution, as well as in the event of applications for industrial property rights.

4 Module Documentation

4.1 BSEC Enumerations and Definitions

4.1.1 Enumerations

4.1.1.1 bsec_library_return_t

enum bsec_library_return_t

Enumeration for function return codes.

Enumerator

BSEC_OK	Function execution successful
BSEC_E_DOSTEPS_INVALIDINPUT	Input (physical) sensor id passed to bsec_do_steps() is not in the valid range or not valid for requested virtual sensor
BSEC_E_DOSTEPS_VALUELIMITS	Value of input (physical) sensor signal passed to bsec_do_steps() is not in the valid range
BSEC_W_DOSTEPS_TSINTRADIFFOUTOFRANGE	Past timestamps passed to bsec_do_steps()
BSEC_E_DOSTEPS_DUPLICATEINPUT	Duplicate input (physical) sensor ids passed as input to bsec_do_steps()
BSEC_I_DOSTEPS_NOOUTPUTSRETURNABLE	No memory allocated to hold return values from bsec_do_steps(), i.e., n_outputs == 0
BSEC_W_DOSTEPS_EXCESSOUTPUTS	Not enough memory allocated to hold return values from bsec_do_steps(), i.e., n_outputs < maximum number of requested output (virtual) sensors
BSEC_W_DOSTEPS_GASINDEXMISS	Gas index not provided to bsec_do_steps()
BSEC_E_SU_WRONGDATARATE	The sample_rate of the requested output (virtual) sensor passed to bsec_update_subscription() is zero
BSEC_E_SU_SAMPLERATELIMITS	The sample_rate of the requested output (virtual) sensor passed to bsec_update_subscription() does not match with the sampling rate allowed for that sensor
BSEC_E_SU_DUPLICATEGATE	Duplicate output (virtual) sensor ids requested through bsec_update_subscription()
BSEC_E_SU_INVALIDSAMPLERATE	The sample_rate of the requested output (virtual) sensor passed to bsec_update_subscription() does not fall within the global minimum and maximum sampling rates

© Bosch Sensortec GmbH 2025. All rights reserved, also regarding any disposal, exploitation, reproduction, editing, distribution, as well as in the event of applications for industrial property rights.

Enumerator

BSEC_E_SU_GATECOUNTEXCEEDSARRAY	Not enough memory allocated to hold returned input (physical) sensor data from bsec_update_subscription(), i.e., n_required_sensor_settings BSEC_MAX_PHYSICAL_SENSOR
BSEC_E_SU_SAMPLINTVLINTEGERMULT	The sample_rate of the requested output (virtual) sensor passed to bsec_update_subscription() is not correct
BSEC_E_SU_MULTGASSAMPLINTVL	The sample_rate of the requested output (virtual), which requires the gas sensor, is not equal to the sample_rate that the gas sensor is being operated
BSEC_E_SU_HIGHHEATERONDURATION	The duration of one measurement is longer than the requested sampling interval
BSEC_W_SU_UNKNOWNOUTPUTGATE	Output (virtual) sensor id passed to bsec_update_subscription() is not in the valid range; e.g., n_requested_virtual_sensors > actual number of output (virtual) sensors requested
BSEC_W_SU_MODINNOULP	ULP plus can not be requested in non-ulp mode
BSEC_I_SU_SUBSCRIBEDOUTPUTGATES	No output (virtual) sensor data were requested via bsec_update_subscription()
BSEC_I_SU_GASESTIMATEPRECEDENCE	GAS_ESTIMATE is suscribed and take precedence over other requested outputs
BSEC_W_SU_SAMPLERATEMISMATCH	Subscriped sample rate of the output is not matching with configured sample rate. For example if user used the configuration of ULP and outputs subscribed for LP mode this warning will inform the user about this mismatch
BSEC_E_PARSE_SECTIONEXCEEDSWORKBU↩FFER	n_work_buffer_size passed to bsec_set_[configuration/state]() not sufficient
BSEC_E_CONFIG_FAIL	Configuration failed
BSEC_E_CONFIG_VERSIONMISMATCH	Version encoded in serialized_[settings/state] passed to bsec_set_[configuration/state]() does not match with current version
BSEC_E_CONFIG_FEATUREMISMATCH	Enabled features encoded in serialized_[settings/state] passed to bsec_set_[configuration/state]() does not match with current library implementation or subscribed outputs
BSEC_E_CONFIG_CRCMISMATCH	serialized_[settings/state] passed to bsec_set_[configuration/state]() is corrupted
BSEC_E_CONFIG_EMPTY	n_serialized_[settings/state] passed to bsec_set_[configuration/state]() is to short to be valid
BSEC_E_CONFIG_INSUFFICIENTWORKBUFFER	Provided work_buffer is not large enough to hold the desired string

© Bosch Sensortec GmbH 2025. All rights reserved, also regarding any disposal, exploitation, reproduction, editing, distribution, as well as in the event of applications for industrial property rights.

Enumerator

BSEC_E_CONFIG_INVALIDSTRINGSIZE	String size encoded in configuration/state strings passed to bsec_set_[configuration/state]() does not match with the actual string size n_serialized_[settings/state] passed to these functions
BSEC_E_CONFIG_INSUFFICIENTBUFFER	String buffer insufficient to hold serialized data from BSEC library
BSEC_E_SET_INVALIDCHANNELIDENTIFIER	Internal error code, size of work buffer in setConfig must be set to BSEC_MAX_WORKBUFFER_SIZE
BSEC_E_SET_INVALIDLENGTH	Internal error code
BSEC_W_SC_CALL_TIMING_VIOLATION	Difference between actual and defined sampling intervals of bsec_sensor_control() greater than allowed
BSEC_W_SC_MODEXCEEDULPTIMELIMIT	ULP plus is not allowed because an ULP measurement just took or will take place
BSEC_W_SC_MODINSUFFICIENTWAITTIME	ULP plus is not allowed because not sufficient time passed since last ULP plus

4.1.1.2 bsec_physical_sensor_t

`enum bsec_physical_sensor_t`

Enumeration for input (physical) sensors.

Used to populate bsec_input_t::sensor_id. It is also used in bsec_sensor_configuration_t::sensor_id structs returned in the parameter required_sensor_settings of bsec_update_subscription().

See also

bsec_sensor_configuration_t
bsec_input_t

Enumerator

BSEC_INPUT_PRESSURE	Pressure sensor output of BME6xy [Pa].
BSEC_INPUT_HUMIDITY	Humidity sensor output of BME6xy [%]. Note Relative humidity strongly depends on the temperature (it is measured at). It may require a conversion to the temperature outside of the device. See also bsec_virtual_sensor_t

© Bosch Sensortec GmbH 2025. All rights reserved, also regarding any disposal, exploitation, reproduction, editing, distribution, as well as in the event of applications for industrial property rights.

Enumerator

BSEC_INPUT_TEMPERATURE	Temperature sensor output of BME6xy [degrees Celsius]. Note The BME6xy is factory trimmed, thus the temperature sensor of the BME6xy is very accurate. The temperature value is a very local measurement value and can be influenced by external heat sources. See also bsec_virtual_sensor_t
BSEC_INPUT_GASRESISTOR	Gas sensor resistance output of BME6xy [Ohm]. The resistance value changes due to varying VOC concentrations (the higher the concentration of reducing VOCs, the lower the resistance and vice versa).
BSEC_INPUT_HEATSOURCE	Additional input for device heat compensation. The value is subtracted from BSEC_INPUT_TEMPERATURE to compute BSEC_OUTPUT_SENSOR_HEAT_COMPE↩NSATED_TEMPERATURE. See also bsec_virtual_sensor_t
BSEC_INPUT_DISABLE_BASELINE_TRACKER	Additional input for controlling IAQ and TVOC equivalent baseline trackers. Allowed input values are: 0 - Default value. IAQ baseline adaptation is enabled and TVOC equivalent baseline adpatation is disabled. 1 - IAQ baseline adaptation is disabled and wait up to 10 seconds before restarting adaptation when input is reset to 0. 2 - IAQ baseline adaptation is disabled and wait up to 3 seconds before restarting adaptation when input is reset to 0. 3 - TVOC equivalent baseline adaptation enabled. Note Baseline is a mechanism for compensating the long term drifts in the enviornment and ensure the consistency of IAQ and TVOC equivalent outputs across different BME sensors.
BSEC_INPUT_PROFILE_PART	Additional input that provides information about the state of the profile (1-9)

© Bosch Sensortec GmbH 2025. All rights reserved, also regarding any disposal, exploitation, reproduction, editing, distribution, as well as in the event of applications for industrial property rights.

4.1.1.3 bsec_virtual_sensor_t

enum bsec_virtual_sensor_t

Enumeration for output (virtual) sensors.

Used to populate bsec_output_t::sensor_id. It is also used in bsec_sensor_configuration_t::sensor_id structs passed in the parameter requested_virtual_sensors of bsec_update_subscription().

See also

bsec_sensor_configuration_t
bsec_output_t

Enumerator

BSEC_OUTPUT_IAQ	Indoor-air-quality estimate [0-500]. Indoor-air-quality (IAQ) gives an indication of the relative change in ambient TVOCs detected by BME6xy. Note The IAQ scale ranges from 0 (clean air) to 500 (heavily polluted air). During operation, algorithms automatically calibrate and adapt themselves to the typical environments where the sensor is operated (e.g., home, workplace, inside a car, etc.).This automatic background calibration ensures that users experience consistent IAQ performance. The calibration process considers the recent measurement history (typ. up to four days) to ensure that IAQ=50 corresponds to typical good air and IAQ=200 indicates typical polluted air.
BSEC_OUTPUT_STATIC_IAQ	Unscaled indoor-air-quality estimate
BSEC_OUTPUT_CO2_EQUIVALENT	CO2 equivalent estimate [ppm]
BSEC_OUTPUT_BREATH_VOC_EQUIVALENT	Breath VOC concentration estimate [ppm]
BSEC_OUTPUT_RAW_TEMPERATURE	Temperature sensor signal [degrees Celsius]. Temperature directly measured by BME6xy in degree Celsius. Note This value is cross-influenced by the sensor heating and device specific heating.
BSEC_OUTPUT_RAW_PRESSURE	Pressure sensor signal [Pa]. Pressure directly measured by the BME6xy in Pa.

© Bosch Sensortec GmbH 2025. All rights reserved, also regarding any disposal, exploitation, reproduction, editing, distribution, as well as in the event of applications for industrial property rights.

Enumerator

BSEC_OUTPUT_RAW_HUMIDITY	Relative humidity sensor signal [%]. Relative humidity directly measured by the BME6xy in %. Note This value is cross-influenced by the sensor heating and device specific heating.
BSEC_OUTPUT_RAW_GAS	Gas sensor signal [Ohm]. Gas resistance measured directly by the BME6xy in Ohm.The resistance value changes due to varying VOC concentrations (the higher the concentration of reducing VOCs, the lower the resistance and vice versa).
BSEC_OUTPUT_STABILIZATION_STATUS	Gas sensor stabilization status [boolean]. Indicates initial stabilization status of the gas sensor element: stabilization is ongoing (0) or stabilization is finished (1).
BSEC_OUTPUT_RUN_IN_STATUS	Gas sensor run-in status [boolean]. Dynamicaly tracks the power-on stabilization of the gas sensor element: stabilization is ongoing (0) or stabilization is finished (1). It depends on how long the sensor has been turn off. A power-on conditioning has been employed for early stabilization of BME sensors.

© Bosch Sensortec GmbH 2025. All rights reserved, also regarding any disposal, exploitation, reproduction, editing, distribution, as well as in the event of applications for industrial property rights.

Enumerator

BSEC_OUTPUT_SENSOR_HEAT_COMPENSATED_TEMPERATURE	Sensor heat compensated temperature [degrees Celsius]. Temperature measured by BME6xy which is compensated for the influence of sensor (heater) in degree Celsius. The self heating introduced by the heater is depending on the sensor operation mode and the sensor supply voltage. Note In addition, the temperature output can be compensated by an user defined value (BSEC_INPUT_HEATSOURCE in degrees Celsius), which represents the device specific self-heating. Thus, the value is calculated as follows: ▶ `BSEC_OUTPUT_SENSOR_HEAT_COMPENSATED_TEMPERATURE = BSEC_INPUT_TEMPERATURE - function(sensor operation mode, sensor supply voltage) - BSEC_INPUT_HEATSOURCE` The self-heating in operation mode BSEC_SAMPLE_RATE_ULP is negligible. The self-heating in operation mode BSEC_SAMPLE_RATE_LP is supported for 1.8V by default (no config file required). If the BME6xy sensor supply voltage is 3.3V, the corresponding config file shall be used.
BSEC_OUTPUT_SENSOR_HEAT_COMPENSATED_HUMIDITY	Sensor heat compensated humidity [%]. Relative humidity measured by BME6xy which is compensated for the influence of sensor (heater) in %. It converts the BSEC_INPUT_HUMIDITY from temperature BSEC_INPUT_TEMPERATURE to temperature BSEC_OUTPUT_SENSOR_HEAT_COMPENSATED_TEMPERATURE. Note If BSEC_INPUT_HEATSOURCE is used for device specific temperature compensation, it will be effective for BSEC_OUTPUT_SENSOR_HEAT_COMPENSATED_HUMIDITY too.
BSEC_OUTPUT_COMPENSATED_GAS	Raw gas resistance compensated by temperature and humidity influences [ohm]. The effect of temperature and humidity on the gas resistance is eleminated to a good extend and it is further linearized to log scale for estimation of the compensated gas resistance.

© Bosch Sensortec GmbH 2025. All rights reserved, also regarding any disposal, exploitation, reproduction, editing, distribution, as well as in the event of applications for industrial property rights.

Enumerator

BSEC_OUTPUT_GAS_PERCENTAGE	Percentage of min and max filtered gas value [%]
BSEC_OUTPUT_GAS_ESTIMATE_1	Gas estimate output channel 1 [0-1]. The gas scan result is given in probability for each of the used gases. In standard scan mode, the probability of H2S and non-H2S is provided by the variables BSEC_OUTPUT_GAS_ESTIMATE_1 & BSEC_OUTPUT_GAS_ESTIMATE_2 respectively. A maximum of 4 classes can be used by configuring with BME AI-studio.
BSEC_OUTPUT_GAS_ESTIMATE_2	Gas estimate output channel 2 [0-1]
BSEC_OUTPUT_GAS_ESTIMATE_3	Gas estimate output channel 3 [0-1]
BSEC_OUTPUT_GAS_ESTIMATE_4	Gas estimate output channel 4 [0-1]
BSEC_OUTPUT_RAW_GAS_INDEX	Gas index cyclically running from 0 to ::heater_profile_len-1, range of heater profile length is from 1 to 10, default being 10
BSEC_OUTPUT_REGRESSION_ESTIMATE_1	Regression estimate output channel 1. The regression estimate gives the quantitative measurement of the gases used. A maximum of 4 gas targets can be used by configuring with BME AI-studio.
BSEC_OUTPUT_REGRESSION_ESTIMATE_2	Regression estimate output channel 2
BSEC_OUTPUT_REGRESSION_ESTIMATE_3	Regression estimate output channel 3
BSEC_OUTPUT_REGRESSION_ESTIMATE_4	Regression estimate output channel 4
BSEC_OUTPUT_TVOC_EQUIVALENT	TVOC Equivalent in ppb

4.1.2 Defines

4.1.2.1 BSEC_MAX_PHYSICAL_SENSOR

```
#define BSEC_MAX_PHYSICAL_SENSOR (8)
```

Number of physical sensors that need allocated space before calling bsec_update_subscription()

4.1.2.2 BSEC_MAX_PROPERTY_BLOB_SIZE

```
#define BSEC_MAX_PROPERTY_BLOB_SIZE (2005)
```

Maximum size (in bytes) of the data blobs returned by bsec_get_configuration()

4.1.2.3 BSEC_MAX_STATE_BLOB_SIZE

```
#define BSEC_MAX_STATE_BLOB_SIZE (259)
```

Maximum size (in bytes) of the data blobs returned by bsec_get_state()

© Bosch Sensortec GmbH 2025. All rights reserved, also regarding any disposal, exploitation, reproduction, editing, distribution, as well as in the event of applications for industrial property rights.

4.1.2.4 BSEC_MAX_WORKBUFFER_SIZE

```
#define BSEC_MAX_WORKBUFFER_SIZE (4096)
```

Maximum size (in bytes) of the work buffer

4.1.2.5 BSEC_NUMBER_OUTPUTS

```
#define BSEC_NUMBER_OUTPUTS (24)
```

Number of outputs, depending on solution

4.1.2.6 BSEC_OUTPUT_INCLUDED

```
#define BSEC_OUTPUT_INCLUDED (2146597359)
```

bitfield that indicates which outputs are included in the solution

4.1.2.7 BSEC_PROCESS_GAS

```
#define BSEC_PROCESS_GAS (1 << (BSEC_INPUT_GASRESISTOR-1))
```

process_data bitfield constant for gas sensor

See also

bsec_bme_settings_t

4.1.2.8 BSEC_PROCESS_HUMIDITY

```
#define BSEC_PROCESS_HUMIDITY (1 << (BSEC_INPUT_HUMIDITY-1))
```

process_data bitfield constant for humidity

See also

bsec_bme_settings_t

4.1.2.9 BSEC_PROCESS_PRESSURE

```
#define BSEC_PROCESS_PRESSURE (1 << (BSEC_INPUT_PRESSURE-1))
```

process_data bitfield constant for pressure

See also

bsec_bme_settings_t

© Bosch Sensortec GmbH 2025. All rights reserved, also regarding any disposal, exploitation, reproduction, editing, distribution, as well as in the event of applications for industrial property rights.

4.1.2.10 BSEC_PROCESS_PROFILE_PART

```
#define BSEC_PROCESS_PROFILE_PART (1 << (BSEC_INPUT_PROFILE_PART-1))
```

process_data bitfield constant for gas sensor

See also

bsec_bme_settings_t

4.1.2.11 BSEC_PROCESS_TEMPERATURE

```
#define BSEC_PROCESS_TEMPERATURE (1 << (BSEC_INPUT_TEMPERATURE-1))
```

process_data bitfield constant for temperature

See also

bsec_bme_settings_t

4.1.2.12 BSEC_SAMPLE_RATE_CONT

```
#define BSEC_SAMPLE_RATE_CONT (1.0f)
```

Sample rate in case of Continuous Mode

4.1.2.13 BSEC_SAMPLE_RATE_DISABLED

```
#define BSEC_SAMPLE_RATE_DISABLED (65535.0f)
```

Sample rate of a disabled sensor

4.1.2.14 BSEC_SAMPLE_RATE_LP

```
#define BSEC_SAMPLE_RATE_LP (0.33333f)
```

Sample rate in case of Low Power Mode

4.1.2.15 BSEC_SAMPLE_RATE_SCAN

```
#define BSEC_SAMPLE_RATE_SCAN (0.055556f)
```

Sample rate in case of scan mode

4.1.2.16 BSEC_SAMPLE_RATE_ULP

```
#define BSEC_SAMPLE_RATE_ULP (0.0033333f)
```

Sample rate in case of Ultra Low Power Mode

© Bosch Sensortec GmbH 2025. All rights reserved, also regarding any disposal, exploitation, reproduction, editing, distribution, as well as in the event of applications for industrial property rights.

4.1.2.17 BSEC_SAMPLE_RATE_ULP_MEASUREMENT_ON_DEMAND

```
#define BSEC_SAMPLE_RATE_ULP_MEASUREMENT_ON_DEMAND (0.0f)
```

Input value used to trigger an extra measurment (ULP plus)

4.1.2.18 BSEC_STRUCT_NAME

```
#define BSEC_STRUCT_NAME Bsec
```

Internal struct name

© Bosch Sensortec GmbH 2025. All rights reserved, also regarding any disposal, exploitation, reproduction, editing, distribution, as well as in the event of applications for industrial property rights.

4.2 BSEC Interfaces

The interface functions are used for interfacing one or more sensors with corresponding BSEC library instances.

4.2.1 Interface Functions

4.2.1.1 bsec_do_steps()

```
bsec_library_return_t bsec_do_steps (
            void * inst,
            const bsec_input_t *const inputs,
            const uint8_t n_inputs,
            bsec_output_t * outputs,
            uint8_t * n_outputs )
```

Main signal processing function of BSEC library instance.

Processing of the input signals and returning of output samples for each instances of BSEC library is performed by bsec_do_steps().

- The samples of all library inputs must be passed with unique identifiers representing the input signals from physical sensors where the order of these inputs can be chosen arbitrary. However, all input have to be provided within the same time period as they are read. A sequential provision to the library might result in undefined behavior.
- The samples of all library outputs are returned with unique identifiers corresponding to the output signals of virtual sensors where the order of the returned outputs may be arbitrary.
- The samples of all input as well as output signals of physical as well as virtual sensors use the same representation in memory with the following fields:
- Sensor identifier:
  - For inputs: required to identify the input signal from a physical sensor
  - For output: overwritten by bsec_do_steps() to identify the returned signal from a virtual sensor
  - Time stamp of the sample

Calling bsec_do_steps() requires the samples of the input signals to be provided along with their time stamp when they are recorded and only when they are acquired. Repetition of samples with the same time stamp are ignored and result in a warning. Repetition of values of samples which are not acquired anew by a sensor result in deviations of the computed output signals. Concerning the returned output samples, an important feature is, that a value is returned for an output only when a new occurrence has been computed. A sample of an output signal is returned only once.

Parameters

in,out	*inst*	Reference to the pointer containing the instance
in	*inputs*	Array of input data samples. Each array element represents a sample of a different physical sensor.
in	*n_inputs*	Number of passed input data structs.
out	*outputs*	Array of output data samples. Each array element represents a sample of a different virtual sensor.
in,out	*n_outputs*	[in] Number of allocated output structs, [out] number of outputs returned

© Bosch Sensortec GmbH 2025. All rights reserved, also regarding any disposal, exploitation, reproduction, editing, distribution, as well as in the event of applications for industrial property rights.

Returns

Zero when successful, otherwise an error code

4.2.1.2 bsec_get_configuration()

```
bsec_library_return_t bsec_get_configuration (
            void * inst,
            const uint8_t config_id,
            uint8_t * serialized_settings,
            const uint32_t n_serialized_settings_max,
            uint8_t * work_buffer,
            const uint32_t n_work_buffer,
            uint32_t * n_serialized_settings )
```

Retrieve the current library instance configuration.

BSEC allows to retrieve the current configuration of the library instance using bsec_get_configuration(). This API returns a binary blob encoding. the current configuration parameters of the library in a format compatible with bsec_set_configuration().

Please use BSEC_MAX_PROPERTY_BLOB_SIZE for allotting the required size.

Parameters

in,out	*inst*	Reference to the pointer containing the instance
in	*config_id*	Identifier for a specific set of configuration settings to be returned; shall be zero to retrieve all configuration settings.
out	*serialized_settings*	Buffer to hold the serialized config blob
in	*n_serialized_settings_max*	Maximum available size for the serialized settings
in,out	*work_buffer*	Work buffer used to parse the binary blob
in	*n_work_buffer*	Length of the work buffer available for parsing the blob
out	*n_serialized_settings*	Actual size of the returned serialized configuration blob

Returns

Zero when successful, otherwise an error code

4.2.1.3 bsec_get_instance_size()

```
size_t bsec_get_instance_size (
            void  )
```

Function that provides the size of the internal instance in bytes. To be used for allocating memory for struct BSEC_STRUCT_NAME.

Returns

Size of the internal instance in bytes

© Bosch Sensortec GmbH 2025. All rights reserved, also regarding any disposal, exploitation, reproduction, editing, distribution, as well as in the event of applications for industrial property rights.

4.2.1.4 bsec_get_state()

```
bsec_library_return_t bsec_get_state (
            void * inst,
            const uint8_t state_set_id,
            uint8_t * serialized_state,
            const uint32_t n_serialized_state_max,
            uint8_t * work_buffer,
            const uint32_t n_work_buffer,
            uint32_t * n_serialized_state )
```

Retrieve the current internal library instance state.

BSEC allows to retrieve the current states of all signal processing modules and the BSEC module of the library instance using bsec_get_state(). This allows a restart of the processing after a reboot of the system by calling bsec_set_state().

Please use BSEC_MAX_STATE_BLOB_SIZE for allotting the required size.

Parameters

in,out	*inst*	Reference to the pointer containing the instance
in	*state_set_id*	Identifier for a specific set of states to be returned; shall be zero to retrieve all states.
out	*serialized_state*	Buffer to hold the serialized config blob
in	*n_serialized_state_max*	Maximum available size for the serialized states
in,out	*work_buffer*	Work buffer used to parse the blob
in	*n_work_buffer*	Length of the work buffer available for parsing the blob
out	*n_serialized_state*	Actual size of the returned serialized blob

Returns

Zero when successful, otherwise an error code

4.2.1.5 bsec_get_version()

```
bsec_library_return_t bsec_get_version (
            void * inst,
            bsec_version_t * bsec_version_p )
```

Return the version information of BSEC library instance.

Parameters

in,out	*inst*	Reference to the pointer containing the instance
out	*bsec_version↩_p*	pointer to struct which is to be populated with the version information

© Bosch Sensortec GmbH 2025. All rights reserved, also regarding any disposal, exploitation, reproduction, editing, distribution, as well as in the event of applications for industrial property rights.

Returns

Zero if successful, otherwise an error code

See also: bsec_version_t

4.2.1.6 bsec_init()

```
bsec_library_return_t bsec_init (
            void * inst )
```

Initialize the library instance.

Initialization and reset of BSEC library instance is performed by calling bsec_init(). Calling this function sets up the relation among all internal modules, initializes run-time dependent library states and resets the configuration and state of all BSEC signal processing modules to defaults.

Before any further use, the library must be initialized. This ensure that all memory and states are in defined conditions prior to processing any data.

Parameters

in,out	*inst*	Reference to the pointer containing the instance

Returns

Zero if successful, otherwise an error code

4.2.1.7 bsec_reset_output()

```
bsec_library_return_t bsec_reset_output (
            void * inst,
            uint8_t sensor_id )
```

Reset a particular virtual sensor output of the library instance.

This function allows specific virtual sensor outputs of each library instance to be reset to be reset. The meaning of "reset" depends on the specific output. In case of the IAQ output, reset means zeroing the output to the current ambient conditions.

Parameters

in,out	*inst*	Reference to the pointer containing the instance
in	*sensor↩ _id*	Virtual sensor to be reset

© Bosch Sensortec GmbH 2025. All rights reserved, also regarding any disposal, exploitation, reproduction, editing, distribution, as well as in the event of applications for industrial property rights.

Returns

Zero when successful, otherwise an error code

4.2.1.8 bsec_sensor_control()

```
bsec_library_return_t bsec_sensor_control (
            void * inst,
            const int64_t time_stamp,
            bsec_bme_settings_t * sensor_settings )
```

Retrieve BMExxx sensor instructions for the library instance.

The bsec_sensor_control() interface is a key feature of BSEC, as it allows an easy way for the signal processing library to control the operation of the BME sensor using the correspodning BSEC library instance. This is important since gas sensor behaviour is mainly determined by how the integrated heater is configured. To ensure an easy integration of BSEC into any system, bsec_sensor_control() will provide the caller with information about the current sensor configuration that is necessary to fulfill the input requirements derived from the current outputs requested via bsec_update_subscription().

In practice the use of this function shall be as follows:

- Call bsec_sensor_control() which returns a bsec_bme_settings_t struct.
- Based on the information contained in this struct, the sensor is configured and a forced-mode measurement is triggered if requested by bsec_sensor_control().
- Once this forced-mode measurement is complete, the signals specified in this struct shall be passed to bsec_do_steps() to perform the signal processing.
- After processing, the process should sleep until the bsec_bme_settings_t::next_call timestamp is reached.

Parameters

in,out	*inst*	Reference to the pointer containing the instance
in	*time_stamp*	Current timestamp in [ns]
out	*sensor_settings*	Settings to be passed to API to operate sensor at this time instance

Returns

Zero when successful, otherwise an error code

4.2.1.9 bsec_set_configuration()

```
bsec_library_return_t bsec_set_configuration (
            void * inst,
            const uint8_t *const serialized_settings,
            const uint32_t n_serialized_settings,
            uint8_t * work_buffer,
            const uint32_t n_work_buffer_size )
```

Update algorithm configuration parameters of the library instance.

© Bosch Sensortec GmbH 2025. All rights reserved, also regarding any disposal, exploitation, reproduction, editing, distribution, as well as in the event of applications for industrial property rights.

BSEC uses a default configuration for the modules and common settings. The initial configuration can be customized by bsec_set_configuration(). This is an optional step.

Note

A work buffer with sufficient size is required and has to be provided by the function caller to decompose the serialization and apply it to the library and its modules.

Please use BSEC_MAX_PROPERTY_BLOB_SIZE for allotting the required size.

Parameters

in,out	*inst*	Reference to the pointer containing the instance
in	*serialized_settings*	Settings serialized to a binary blob
in	*n_serialized_settings*	Size of the settings blob
in,out	*work_buffer*	Work buffer used to parse the blob
in	*n_work_buffer_size*	Length of the work buffer available for parsing the blob

Returns

Zero when successful, otherwise an error code

4.2.1.10 bsec_set_state()

```
bsec_library_return_t bsec_set_state (
            void * inst,
            const uint8_t *const serialized_state,
            const uint32_t n_serialized_state,
            uint8_t * work_buffer,
            const uint32_t n_work_buffer_size )
```

Restore the internal state of the library instance.

BSEC uses a default state for all signal processing modules and the BSEC module for each instance. To ensure optimal performance, especially of the gas sensor functionality, it is recommended to retrieve the state using bsec_get_state() before unloading the library, storing it in some form of non-volatile memory, and setting it using bsec_set_state() before resuming further operation of the library.

Note

A work buffer with sufficient size is required and has to be provided by the function caller to decompose the serialization and apply it to the library and its modules.

Please use BSEC_MAX_STATE_BLOB_SIZE for allotting the required size.

Parameters

in,out	*inst*	Reference to the pointer containing the instance
in	*serialized_state*	States serialized to a binary blob
in	*n_serialized_state*	Size of the state blob
in,out	*work_buffer*	Work buffer used to parse the blob
in	*n_work_buffer_size*	Length of the work buffer available for parsing the blob

© Bosch Sensortec GmbH 2025. All rights reserved, also regarding any disposal, exploitation, reproduction, editing, distribution, as well as in the event of applications for industrial property rights.

Returns

Zero when successful, otherwise an error code

4.2.1.11 bsec_update_subscription()

```
bsec_library_return_t bsec_update_subscription (
            void * inst,
            const bsec_sensor_configuration_t *const requested_virtual_sensors,
            const uint8_t n_requested_virtual_sensors,
            bsec_sensor_configuration_t * required_sensor_settings,
            uint8_t * n_required_sensor_settings )
```

Subscribe to library virtual sensors outputs.

Use bsec_update_subscription() to instruct BSEC which of the processed output signals of the library instance are requested at which sample rates.

See bsec_virtual_sensor_t for available library outputs.

Based on the requested virtual sensors outputs, BSEC will provide information about the required physical sensor input signals (see bsec_physical_sensor_t) with corresponding sample rates. This information is purely informational as bsec_sensor_control() will ensure the sensor is operated in the required manner. To disable a virtual sensor, set the sample rate to BSEC_SAMPLE_RATE_DISABLED.

The subscription update using bsec_update_subscription() is apart from the signal processing one of the the most important functions. It allows to enable the desired library outputs. The function determines which physical input sensor signals are required at which sample rate to produce the virtual output sensor signals requested by the user. When this function returns with success, the requested outputs are called subscribed. A very important feature is the retaining of already subscribed outputs. Further outputs can be requested or disabled both individually and group-wise in addition to already subscribed outputs without changing them unless a change of already subscribed outputs is requested.

Note

The state of the library concerning the subscribed outputs cannot be retained among reboots.

The interface of bsec_update_subscription() requires the usage of arrays of sensor configuration structures. Such a structure has the fields sensor identifier and sample rate. These fields have the properties:

- Output signals of virtual sensors must be requested using unique identifiers (Member of bsec_virtual_sensor_t)
- Different sets of identifiers are available for inputs of physical sensors and outputs of virtual sensors
- Identifiers are unique values defined by the library, not from external
- Sample rates must be provided as value of
  - An allowed sample rate for continuously sampled signals
  - 65535.0f (BSEC_SAMPLE_RATE_DISABLED) to turn off outputs and identify disabled inputs

Note

The same sensor identifiers are also used within the functions bsec_do_steps().

The usage principles of bsec_update_subscription() are:

- Differential updates (i.e., only asking for outputs that the user would like to change) is supported.

© Bosch Sensortec GmbH 2025. All rights reserved, also regarding any disposal, exploitation, reproduction, editing, distribution, as well as in the event of applications for industrial property rights.

- Invalid requests of outputs are ignored. Also if one of the requested outputs is unavailable, all the requests are ignored. At the same time, a warning is returned.
- To disable BSEC, all outputs shall be turned off. Only enabled (subscribed) outputs have to be disabled while already disabled outputs do not have to be disabled explicitly.

Parameters

in,out	*inst*	Reference to the pointer containing the instance
in	*requested_virtual_sensors*	Pointer to array of requested virtual sensor (output) configurations for the library
in	*n_requested_virtual_sensors*	Number of virtual sensor structs pointed by requested_virtual_sensors
out	*required_sensor_settings*	Pointer to array of required physical sensor configurations for the library
in,out	*n_required_sensor_settings*	[in] Size of allocated required_sensor_settings array, [out] number of sensor configurations returned

Returns

Zero when successful, otherwise an error code

See also

bsec_sensor_configuration_t
bsec_physical_sensor_t
bsec_virtual_sensor_t

© Bosch Sensortec GmbH 2025. All rights reserved, also regarding any disposal, exploitation, reproduction, editing, distribution, as well as in the event of applications for industrial property rights.

5 Data Structure Documentation

5.1 bsec_bme_settings_t Struct Reference

Data Fields

- int64_t next_call
  Time stamp of the next call of the sensor_control.
- uint32_t process_data
  Bit field describing which data is to be passed to bsec_do_steps()
- uint16_t heater_temperature
  Heater temperature [degrees Celsius].
- uint16_t heater_duration
  Heater duration [ms].
- uint16_t heater_temperature_profile [10]
  Heater temperature profile [degrees Celsius].
- uint16_t heater_duration_profile [10]
  Heater duration profile [ms].
- uint8_t heater_profile_len
  Heater profile length [1-10].
- uint8_t run_gas
  Enable gas measurements [0/1].
- uint8_t pressure_oversampling
  Pressure oversampling settings [0-5].
- uint8_t temperature_oversampling
  Temperature oversampling settings [0-5].
- uint8_t humidity_oversampling
  Humidity oversampling settings [0-5].
- uint8_t trigger_measurement
  Trigger a forced measurement with these settings now [0/1].
- uint8_t op_mode
  Sensor operation mode [0/1].

5.1.1 Detailed Description

Structure returned by bsec_sensor_control() to configure BME6xy sensor.

This structure contains settings that must be used to configure the BME6xy to perform a forced-mode measurement. A measurement should only be executed if bsec_bme_settings_t::trigger_measurement is 1. If so, the oversampling settings for temperature, humidity, and pressure should be set to the provided settings

© Bosch Sensortec GmbH 2025. All rights reserved, also regarding any disposal, exploitation, reproduction, editing, distribution, as well as in the event of applications for industrial property rights.

provided in bsec_bme_settings_t::temperature_oversampling, bsec_bme_settings_t::humidity_oversampling, and bsec_bme_settings_t::pressure_oversampling, respectively.

In case of bsec_bme_settings_t::run_gas = 1, the gas sensor must be enabled with the provided bsec_bme_settings_t::heater_temperature and bsec_bme_settings_t::heating_duration settings.

5.1.2 Field Documentation

5.1.2.1 heater_duration

`uint16_t bsec_bme_settings_t::heater_duration`

Heater duration [ms].

5.1.2.2 heater_duration_profile

`uint16_t bsec_bme_settings_t::heater_duration_profile[10]`

Heater duration profile [ms].

5.1.2.3 heater_profile_len

`uint8_t bsec_bme_settings_t::heater_profile_len`

Heater profile length [1-10].

5.1.2.4 heater_temperature

`uint16_t bsec_bme_settings_t::heater_temperature`

Heater temperature [degrees Celsius].

5.1.2.5 heater_temperature_profile

`uint16_t bsec_bme_settings_t::heater_temperature_profile[10]`

Heater temperature profile [degrees Celsius].

5.1.2.6 humidity_oversampling

`uint8_t bsec_bme_settings_t::humidity_oversampling`

Humidity oversampling settings [0-5].

5.1.2.7 next_call

`int64_t bsec_bme_settings_t::next_call`

Time stamp of the next call of the sensor_control.

© Bosch Sensortec GmbH 2025. All rights reserved, also regarding any disposal, exploitation, reproduction, editing, distribution, as well as in the event of applications for industrial property rights.

5.1.2.8 op_mode

`uint8_t bsec_bme_settings_t::op_mode`

Sensor operation mode [0/1].

5.1.2.9 pressure_oversampling

`uint8_t bsec_bme_settings_t::pressure_oversampling`

Pressure oversampling settings [0-5].

5.1.2.10 process_data

`uint32_t bsec_bme_settings_t::process_data`

Bit field describing which data is to be passed to bsec_do_steps()

See also

BSEC_PROCESS_GAS, BSEC_PROCESS_TEMPERATURE, BSEC_PROCESS_HUMIDITY, BSEC_PROCESS_PRESSURE

5.1.2.11 run_gas

`uint8_t bsec_bme_settings_t::run_gas`

Enable gas measurements [0/1].

5.1.2.12 temperature_oversampling

`uint8_t bsec_bme_settings_t::temperature_oversampling`

Temperature oversampling settings [0-5].

5.1.2.13 trigger_measurement

`uint8_t bsec_bme_settings_t::trigger_measurement`

Trigger a forced measurement with these settings now [0/1].

5.2 bsec_input_t Struct Reference

Data Fields

- int64_t time_stamp

  Time stamp in nanosecond resolution [ns].
- float signal

  Signal sample in the unit defined for the respective sensor_id.

© Bosch Sensortec GmbH 2025. All rights reserved, also regarding any disposal, exploitation, reproduction, editing, distribution, as well as in the event of applications for industrial property rights.

- uint8_t signal_dimensions

  Signal dimensions (reserved for future use, shall be set to 1)
- uint8_t sensor_id

  Identifier of physical sensor.

5.2.1 Detailed Description

Structure describing an input sample to the library.

Each input sample is provided to BSEC as an element in a struct array of this type. Timestamps must be provided in nanosecond resolution. Moreover, duplicate timestamps for subsequent samples are not allowed and will results in an error code being returned from bsec_do_steps().

The meaning unit of the signal field are determined by the bsec_input_t::sensor_id field content. Possible bsec_input_t::sensor_id values and and their meaning are described in bsec_physical_sensor_t.

See also

bsec_physical_sensor_t

5.2.2 Field Documentation

5.2.2.1 sensor_id

`uint8_t bsec_input_t::sensor_id`

Identifier of physical sensor.

See also

bsec_physical_sensor_t

5.2.2.2 signal

`float bsec_input_t::signal`

Signal sample in the unit defined for the respective sensor_id.

See also

bsec_physical_sensor_t

5.2.2.3 signal_dimensions

`uint8_t bsec_input_t::signal_dimensions`

Signal dimensions (reserved for future use, shall be set to 1)

© Bosch Sensortec GmbH 2025. All rights reserved, also regarding any disposal, exploitation, reproduction, editing, distribution, as well as in the event of applications for industrial property rights.

5.2.2.4 time_stamp

`int64_t bsec_input_t::time_stamp`

Time stamp in nanosecond resolution [ns].

Timestamps must be provided as non-repeating and increasing values. They can have their 0-points at system start or at a defined wall-clock time (e.g., 01-Jan-1970 00:00:00)

5.3 bsec_output_t Struct Reference

Data Fields

- int64_t time_stamp

  Time stamp in nanosecond resolution as provided as input [ns].
- float signal

  Signal sample in the unit defined for the respective bsec_output_t::sensor_id.
- uint8_t signal_dimensions

  Signal dimensions (reserved for future use, shall be set to 1)
- uint8_t sensor_id

  Identifier of virtual sensor.
- uint8_t accuracy

  Accuracy status 0-3.

5.3.1 Detailed Description

Structure describing an output sample of the library.

Each output sample is returned from BSEC by populating the element of a struct array of this type. The contents of the signal field is defined by the supplied bsec_output_t::sensor_id. Possible output bsec_output_t::sensor_id values are defined in bsec_virtual_sensor_t.

See also

bsec_virtual_sensor_t

5.3.2 Field Documentation

5.3.2.1 accuracy

`uint8_t bsec_output_t::accuracy`

Accuracy status 0-3.

Some virtual sensors provide a value in the accuracy field. If this is the case, the meaning of the field is as follows:

Name	Value	Accuracy description
UNRELIABLE	0	Sensor data is unreliable, the sensor must be calibrated
LOW_ACCURACY	1	Reliability of virtual sensor is low, sensor should be calibrated

© Bosch Sensortec GmbH 2025. All rights reserved, also regarding any disposal, exploitation, reproduction, editing, distribution, as well as in the event of applications for industrial property rights.

Name	Value	Accuracy description
MEDIUM_ACCURACY	2	Medium reliability, sensor calibration or training may improve performance
HIGH_ACCURACY	3	High reliability

For example:

- IAQ accuracy indicator will notify the user when she/he should initiate a calibration process. Calibration is performed automatically in the background if the sensor is exposed to clean and polluted air for approximately 30 minutes each.

Virtual sensor	Value	Accuracy description
IAQ	0	Stabilization / run-in ongoing
	1	Low accuracy,to reach high accuracy(3),please expose sensor once to good air (e.g. outdoor air) and bad air (e.g. box with exhaled breath) for auto-trimming
	2	Medium accuracy: auto-trimming ongoing
	3	High accuracy

- Gas estimator accuracy indicator will notify the user when she/he gets valid gas prediction output.

Virtual sensor	Value	Accuracy description
GAS_ESTIMATE_x*	0	No valid gas estimate found - BSEC collecting gas features
	3	Gas estimate prediction available

* GAS_ESTIMATE_1, GAS_ESTIMATE_2, GAS_ESTIMATE_3, GAS_ESTIMATE_4

- Regression estimate accuracy will notify the user when she/he gets valid regression estimate output.

Virtual sensor	Value	Accuracy description
REGRESSION_ESTIMATE_x*	0	No valid regression estimate output found - BSEC collecting gas features
	2	Predicted regression estimate output is not within the value of the label present in the training data
	3	Predicted regression estimate output is within the the value of the label present in the training data

* REGRESSION_ESTIMATE_1, REGRESSION_ESTIMATE_2, REGRESSION_ESTIMATE_3, REGRESSION↩ _ESTIMATE_4

5.3.2.2 sensor_id

`uint8_t bsec_output_t::sensor_id`

Identifier of virtual sensor.

See also

bsec_virtual_sensor_t

© Bosch Sensortec GmbH 2025. All rights reserved, also regarding any disposal, exploitation, reproduction, editing, distribution, as well as in the event of applications for industrial property rights.

5.3.2.3 signal

`float bsec_output_t::signal`

Signal sample in the unit defined for the respective bsec_output_t::sensor_id.

See also

bsec_virtual_sensor_t

5.3.2.4 signal_dimensions

`uint8_t bsec_output_t::signal_dimensions`

Signal dimensions (reserved for future use, shall be set to 1)

5.3.2.5 time_stamp

`int64_t bsec_output_t::time_stamp`

Time stamp in nanosecond resolution as provided as input [ns].

5.4 bsec_sensor_configuration_t Struct Reference

Data Fields

- float sample_rate
  Sample rate of the virtual or physical sensor in Hertz [Hz].
- uint8_t sensor_id
  Identifier of the virtual or physical sensor.

5.4.1 Detailed Description

Structure describing sample rate of physical/virtual sensors.

This structure is used together with bsec_update_subscription() to enable BSEC outputs and to retrieve information about the sample rates used for BSEC inputs.

5.4.2 Field Documentation

5.4.2.1 sample_rate

`float bsec_sensor_configuration_t::sample_rate`

Sample rate of the virtual or physical sensor in Hertz [Hz].

Only supported sample rates are allowed.

© Bosch Sensortec GmbH 2025. All rights reserved, also regarding any disposal, exploitation, reproduction, editing, distribution, as well as in the event of applications for industrial property rights.

5.4.2.2 sensor_id

`uint8_t bsec_sensor_configuration_t::sensor_id`

Identifier of the virtual or physical sensor.

The meaning of this field changes depending on whether the structs are as the requested_virtual_sensors argument to bsec_update_subscription() or as the required_sensor_settings argument.

bsec_update_subscription() argument	sensor_id field interpretation
requested_virtual_sensors	bsec_virtual_sensor_t
required_sensor_settings	bsec_physical_sensor_t

See also

bsec_physical_sensor_t
bsec_virtual_sensor_t

5.5 bsec_version_t Struct Reference

Data Fields

- uint8_t major

  Major version.
- uint8_t minor

  Minor version.
- uint8_t major_bugfix

  Major bug fix version.
- uint8_t minor_bugfix

  Minor bug fix version.

5.5.1 Detailed Description

Structure containing the version information.

Please note that configuration and state strings are coded to a specific version and will not be accepted by other versions of BSEC.

5.5.2 Field Documentation

5.5.2.1 major

`uint8_t bsec_version_t::major`

Major version.

© Bosch Sensortec GmbH 2025. All rights reserved, also regarding any disposal, exploitation, reproduction, editing, distribution, as well as in the event of applications for industrial property rights.

5.5.2.2 major_bugfix

`uint8_t bsec_version_t::major_bugfix`

Major bug fix version.

5.5.2.3 minor

`uint8_t bsec_version_t::minor`

Minor version.

5.5.2.4 minor_bugfix

`uint8_t bsec_version_t::minor_bugfix`

Minor bug fix version.

© Bosch Sensortec GmbH 2025. All rights reserved, also regarding any disposal, exploitation, reproduction, editing, distribution, as well as in the event of applications for industrial property rights.