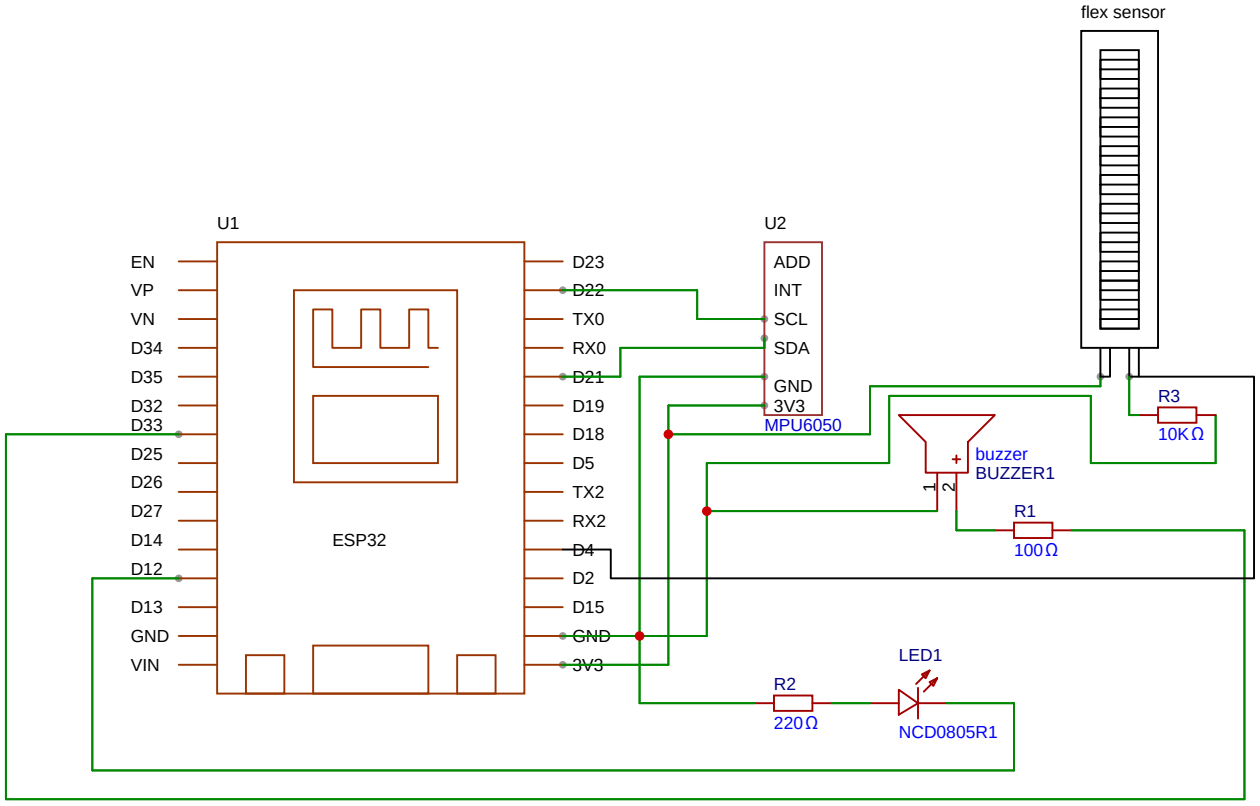

Schematic	Ohmies_IEEE_IH_schematic	Create at	2025-06-26
		Update at	2025-06-26
Board	Board1	Page	P1
Drawn		IEEE_Internal_Hack	
Reviewed			
		Version	Size	Page 1 Total 1
EasyEDA		V1.0	A4	EasyEDA.com