NYU TANDON SCHOOL OF ENGINEERING

General Engineering Department

Retire Fire

Project Requirements Specifications

Project Team Members: Claire Ai, Kacie Carrier, Sophia Choi, and Alicia Tian

1. INTRODUCTION
1.1 Purpose of Project
1.2 Background of the Experiment

2. Requirements
2.1 Physical Components
2.2 Software Components

3. Procedures
3.1 Physical Construction
3.2 Software Setup
3.3 Software Troubleshooting

4. Milestone and Final Product Requirements
4.1 Benchmark A Requirements
4.2 Benchmark B Requirements
4.3 Final Submission Requirements
4.6 Human Resources and Training

5. Results
5.1 Benchmark A Results
5.2 Benchmark B Results
5.3 Difficulties Experienced

6. Conclusion
6.1 Results of Project
6.2 Future Improvements

1. Introduction

1.1 Purpose of Project

House fires and floods are major problems facing the United States. Retire Fire aims to tackle this problem by utilizing heat and water sensors that can be easily implemented in a home. It can turn off devices when left on and when they pose a fire or flood risk. In addition, Retire Fire aims to decrease energy use in homes by sending app alerts when a device is left on and turning off heating/ water devices.

1.2 Background of the Experiment

This project aims to decrease fire and flood statistics. According to the National Fire Protection Agency, there are about 346,800 house fires a year, and according to iProperty Management, house flooding costs about $20 billion a year. Retire Fire was created because these statistics are quite high, and engineering can be used to try to decrease these occurrences.

2. Requirements

2.1 Physical Components

The requirements for physical components were Arduino, breadboard, wires, resistors, LED lights, heat sensor, water level sensor, and water pump. These devices had to gather data and turn off when a certain condition was met.

2.2 Software Components

The requirements for software were Fusion 360, Photoshop, and Arduino IDE. Specifically, the water level and heat sensors required conditional statements to have a threshold for turning on and off the devices.

3. Procedures

3.1 Physical Construction

To construct the physical part of the project, a breadboard and Arduino were obtained. A thermistor was the first thing to be wired because the LED was coded to be dependent on the readings from the thermistor. After the thermistor was set up correctly, the LED component was added. The water level sensor was then added to the wiring as the second sensor for the project. Lastly, the water pump was added to be based on the water level sensor. The schedule followed for the procedure of the project can be seen below in Figure 1.

Figure 1: Project Schedule

3.2 Software Setup

To set up the software, Arduino IDE was used. A code was created to record the temperature by getting readings from the thermistor. The software was created to convert the temperature to Fahrenheit and record it every 5 seconds. Then, a conditional loop was created to turn off an LED based on the temperature readings from the thermistor. After the LED was coded, the water level sensor was coded to display information the same way as the thermistor. The water pump was coded using a condition to turn off the water after a certain threshold was detected from the water level sensor.

3.3 Software Troubleshooting

The thermistor code did not need to go through troubleshooting because it was similar to the code from a previous lab. The water level sensor code required lots of corrections as it took a while to figure out how it worked and recorded the water level. The water pump code had to be corrected to match how the Arduino was wired because originally the code included the wrong port for the Arduino. This was corrected and then the water pump code worked.

4. Milestone and Final Product Requirements

4.1 Benchmark A Requirements

The requirements for Benchmark A were that the CAD model had to be developed and consist of the interior of the cabinet and the compartment for the Arduino, the Preliminary Design Investigation had to be finished, the engineering notebook had to be created and contain files documenting the dates members did tasks, a logo had to be created and submitted on the EG website, and a rough code flowchart had to be developed. For extra credit, the logo could be made in two different colors, which was accomplished using orange and purple.

4.2 Benchmark B Requirements

The requirements for Benchmark B were that the CAD model had to be updated to include a hinge mechanism, the engineering notebook had to be updated with more substantial entries, the logo had to be approved by Protolab, the encasing for the project had to be three-dimensionally printed, and the thermistor had to be fully wired and coded to turn off an LED output given a specific heat value. Extra credit was awarded for making the logo multicolored and creating an app interface for the smart hub, which were accomplished for final commissioning.

4.3 Final Submission Requirements

The requirements for final submission were that all the code had to be functional and in one file, the appliance had to work and be within the box, the engineering notebook had to be updated, the LED had to turn off due to a certain heat threshold, and the water pump had to turn off based on a certain water level. Extra credit was a multicolored logo and functional app interface.

4.4 Human Resource and Training

Throughout this project, CATME was utilized as feedback to report on the performance of group members. Regarding training, all group members received Makerspace Ultimaker and safety training by the assigned deadline. In addition, during lab time, group members were trained in Fusion 360 and Arduino code/wiring.

5. Results

5.1 Benchmark A Results

For benchmark A, all tasks were completed and submitted a week before the due date. This resulted in early benchmarking and extra credit points. The physical design was not yet started, but a rough idea was created in CAD.

5.2 Benchmark B Results

For benchmark B, all tasks were successfully completed for the deadline, and no penalties were received. At this point, half of the device (the heat sensor) was wired and coded. In addition, the original design was modified, and 3D printed multiple times to complete the requirements. Also during this part of the project, the circuit diagrams were created. The schematic diagram that shows the components of the device can be seen below in Figure 2.

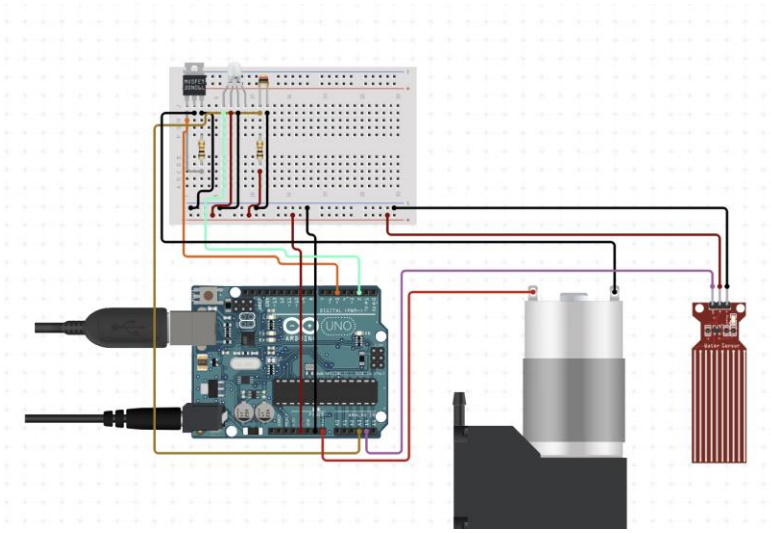

Figure 2: Schematic Diagram

In addition, the circuit diagram for the project was also created for benchmark B. The circuit diagram can be seen below in Figure 3.

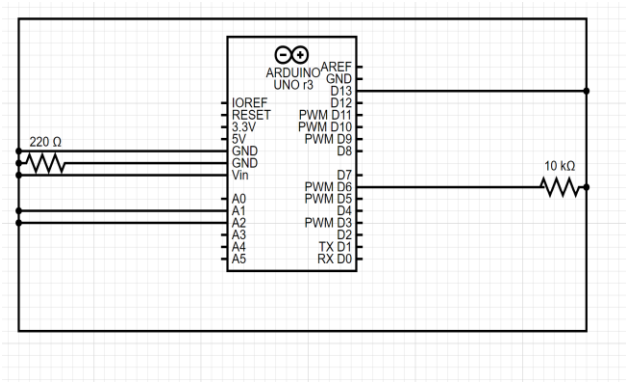

Figure 3: Circuit Diagram

5.3 Difficulties Experienced

Throughout this project, many difficulties were experienced. One difficulty was using the water pump. No group members knew how to use the pump, so much research was done on how to get it working and coded to turn off when the sensor was in the water. Another difficulty experienced was learning how to solder. No group members had previous experience, but soldering was needed for the water pump because it would not stay in place due to short wires. Lastly, a difficulty was wiring the device. The project required a lot of wired physical components, so this had a learning curve of how the Arduino and breadboard worked.

6. Conclusion

6.1 Results of Project

Throughout this project, our team successfully developed a prototype of a device that turns off heating/water devices in a household when the sensors either sense water or a temperature over 85 degrees Fahrenheit. The project included the successful use of a breadboard, Arduino, and sensors, and an outer box for the design was created.

The code was finalized before the final submission. Below shows the code used for the project :

```
//Include relevant libraries that the program will need
#include <math.h>
#include <Time.h>

//Constants to be used for voltage-temperature conversion
float A = 0.001129148;
float B = 0.000234125;
float C = 0.0000000876741;




const int pumpPin =  9; // the number of the pump pin
const int ledPin = 7; // the number of the LED pin
const int analogInPin = A1; // the number of the analogPin
int sensorValue = 0;
int sensorPump;
int sensorLow = 0;
int sensorHigh = 50;


//Function to convert measured voltage to temperature in fahrenheit
double voltageToTemp(int voltage) {

 double res;
 double temp;
 bool LED;
 //res variable to hold the value of natural log of thermal resistance valu
 res = log(10000.0*((1024.0/voltage-1)));

 /* Convert the thermal resistance value to temperature with equation
  * T=1/(A + Bln(R) + Cln(R)^3)
  */
 temp = 1 / (A + (B * res) + (C * res * res * res) );

 /* Convert the temp value from Kelvin to Celcius to Fahrenheit using equations:
  * Celcius = Kelvin - 273.15
  * Fahrenheit = ( (9.0/5.0) * Celcius ) + 32.0
  */
 //*INSERT CODE HERE*
 temp = temp - 273.15;
 temp  = ( (9.0/5.0) * temp ) + 32.0;
```

```
 return temp;
}

void setup() {
// initialize the pump pin as an output:
pinMode(pumpPin, OUTPUT);
 //Establishing a serial communication with baud rate 9600
Serial.begin(9600);
Serial.println("Time (s), Temperature (F)");
pinMode(ledPin, OUTPUT);
pinMode(pumpPin, OUTPUT);
while (millis() < 5000) {
    sensorPump = analogRead(A1);
    digitalWrite(pumpPin, LOW);
    if (sensorPump > sensorHigh) {
    sensorHigh = sensorPump; // assign values to sensor High and sensor Low
    }

    if (sensorPump < sensorLow)  {
    sensorLow = sensorPump;
    }
  }
}

void loop() {
  //define variables
  int volt;
  int times;
  double temperature;

  //Read values from pin A0 into variable volt
  //*INSERT CODE HERE*
  volt = analogRead(A0);
  sensorValue = analogRead(analogInPin);



  //Call voltage to temperature function for conversion
  temperature=voltageToTemp(volt);
  //Get time of running program, in milliseconds and convert to seconds
  times = millis()/1000;

  Serial.print(times);
  Serial.print(", ");
  Serial.println(temperature);
```

```
  delay(5000); // time seperation

  Serial.print("Sensor = " );
Serial.print(sensorValue / 10); // printing out the sensor value in percentage
Serial.println("%");
delay(0);



  if (temperature >= 85){
    digitalWrite(ledPin, LOW);  // turning off the LED/Heating devices when
temperature is over 85
  }else{
    digitalWrite(ledPin, HIGH); // turning on the LED/Heating devices when
temperature is under 85
  }
sensorPump = analogRead(A1); // read the value from analogPin A1
digitalWrite(pumpPin, LOW);
  if (sensorPump < 50)  {
    digitalWrite(pumpPin, LOW); // turn off/ make the waterpump on when the
sensor pump value is lower than 50
  }
  else{
    digitalWrite(pumpPin, HIGH); // turn on/ make the water pump off when the
sensor pump value is higher than 50

  }
}
```

The final wiring of the project can be seen below in Figure 4.

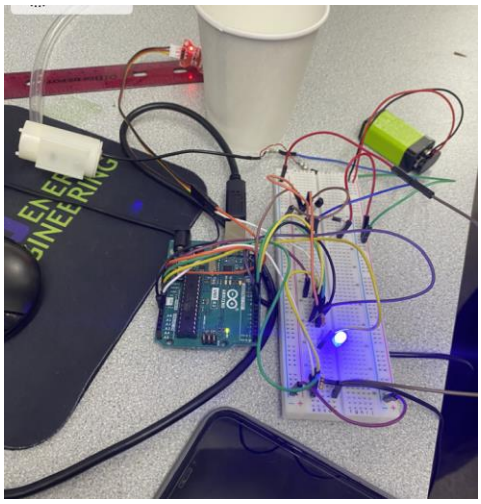

Figure 4: Final Project

The CAD drawings were also finalized for the project. Figure 5 below shows the top CAD view of the box.

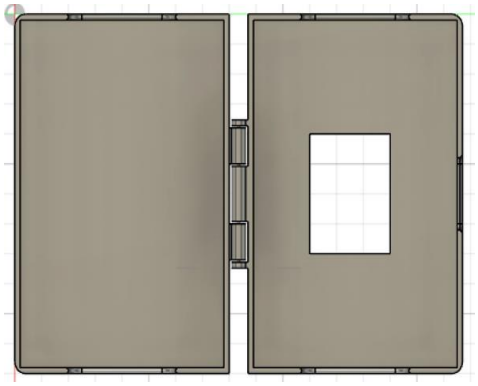

Figure 5: Top View

Figure 6 below shows the isometric view with the lid opened.

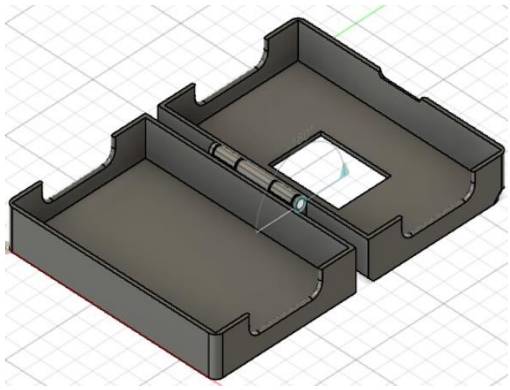

Figure 6: Isometric View

Figure 7 below shows the isometric view of the final box with the lid closed.

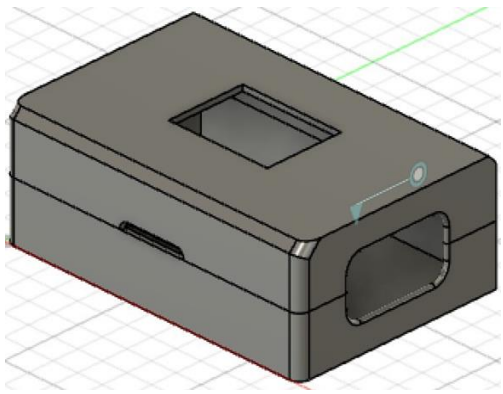

Figure 7: Isometric with lid closed

The side view of the CAD drawing was also taken. It can be seen below in Figure 8.

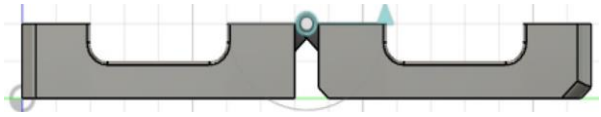

Figure 8: Side View

After creating the project, the final cost was put together and compared to the previous cost estimates. The cost estimate table can be seen below in Table 1.

Table 1: Cost Estimate Table

Resource	Cost Per Unit($)	Milestone 1		Milestone 2		Milestone 3	
		Quantity	Cost($)	Quantity	Cost($)	Quantity	Cost($)
Heat sensor	6	1	6	1	6	2	12
3D printing	30	0	0	0.2	6	0.4	12
Water Level Sensor	8	0	0	0	0	2	16
LED	0	1	0	1	0	2	0
Projected Labor	50	75	3750	100	5000	100	5000
Miscellaneous	-	-	5	-	12	-	18
Total Cost		$ 3761		$ 5024		$ 5093	
Total & 20% Slack		$ 4513.2		$ 6028.8		$ 6111.6	

6.2 Future Improvements

Looking to the future, this device could be created using many different types of sensors, not just heat and water. For example, there could be light sensors to turn off lights when they are left on for a long time or sensors to tell whether a door is locked. These improvements would make the device adaptable to what the consumer needs for their home. In addition, more outer box designs could be created to fit different home aesthetics. This would expand the product to a broader audience because there would be different designs based on what the consumer wants.