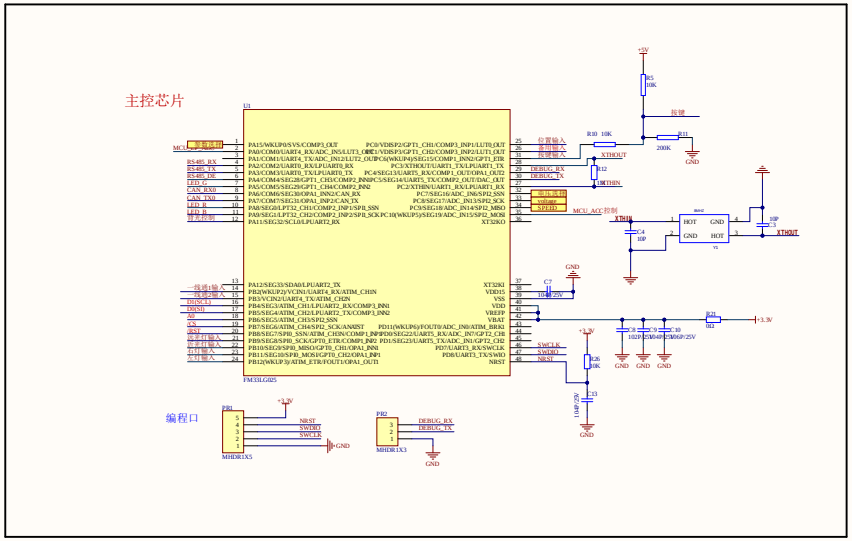

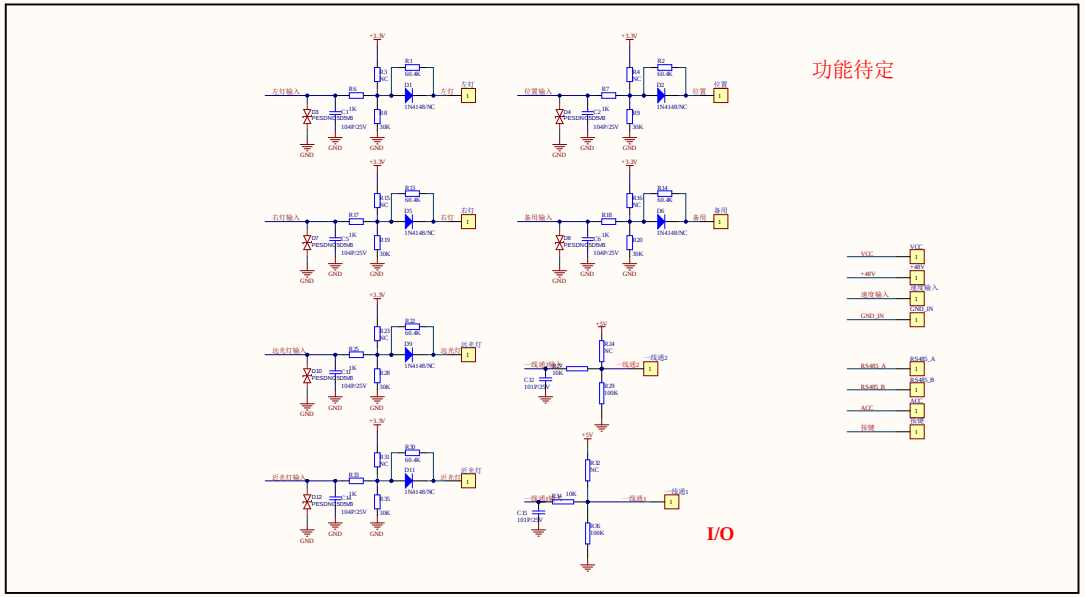

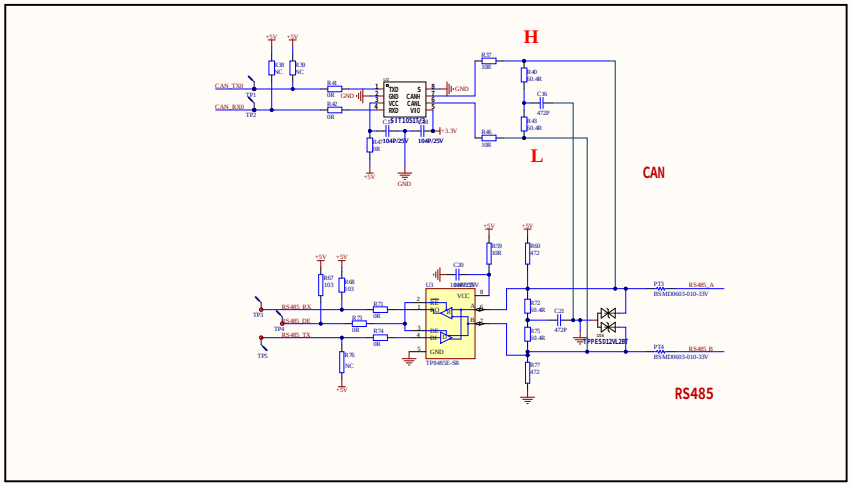

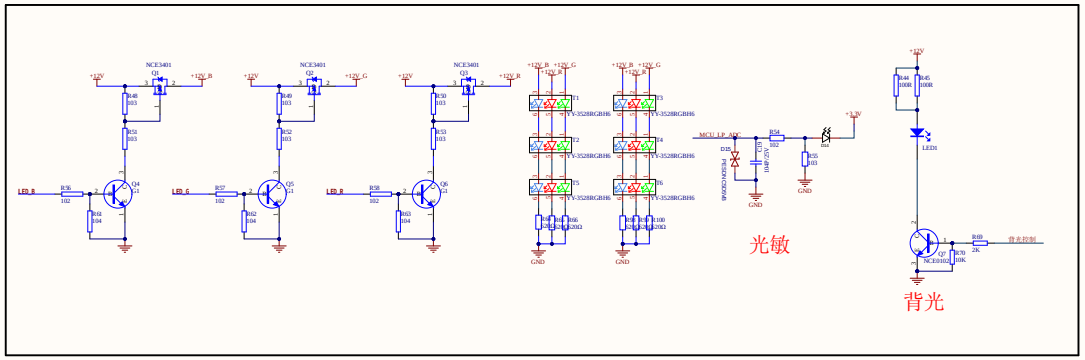

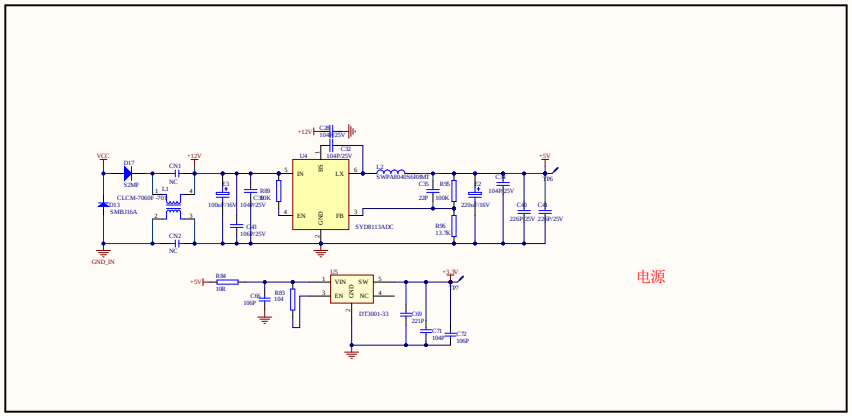

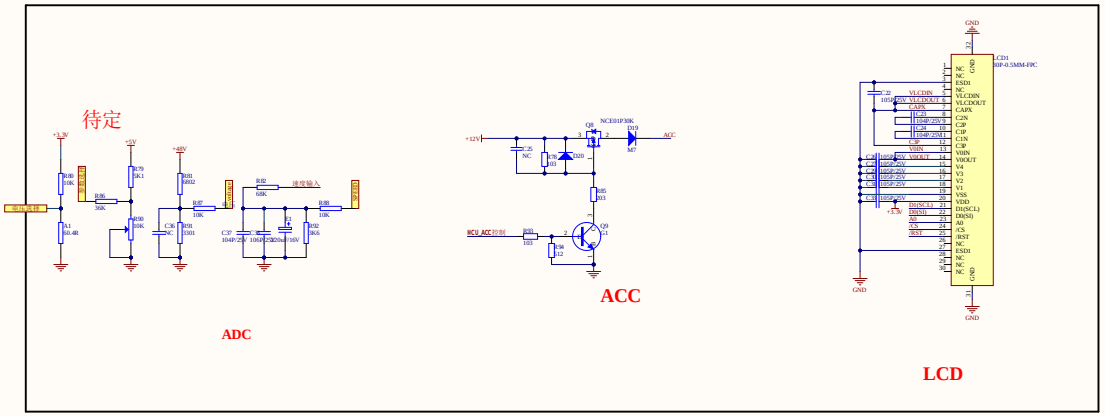

Title		
Size A1	Number	Revision
Date: 3/25/2024	Sheet of	
File: D:\ADAOWLIZHUANYONG...\36-万用表\万用表.SchDoc		