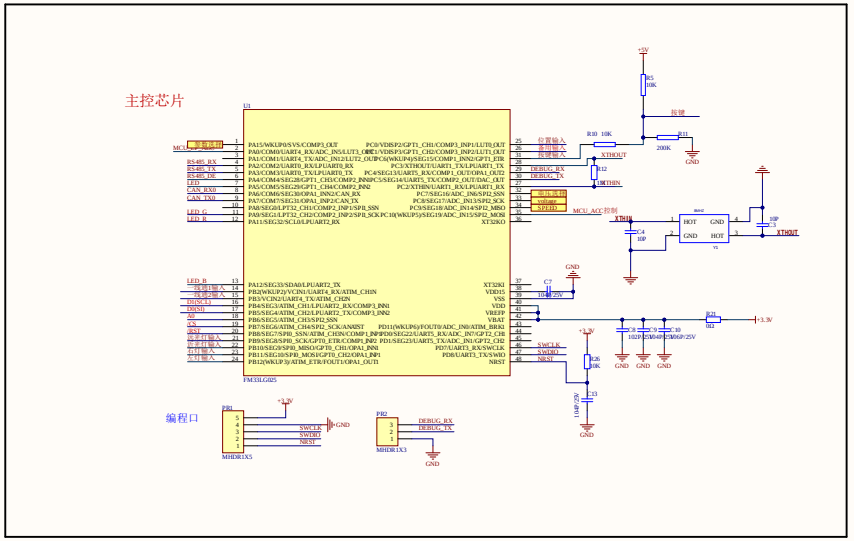

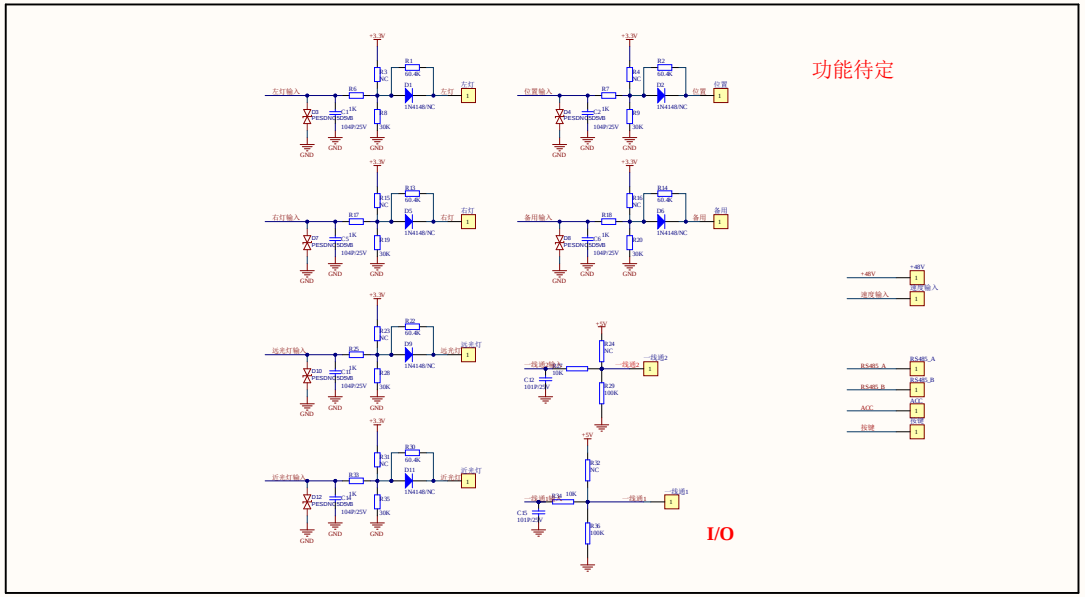

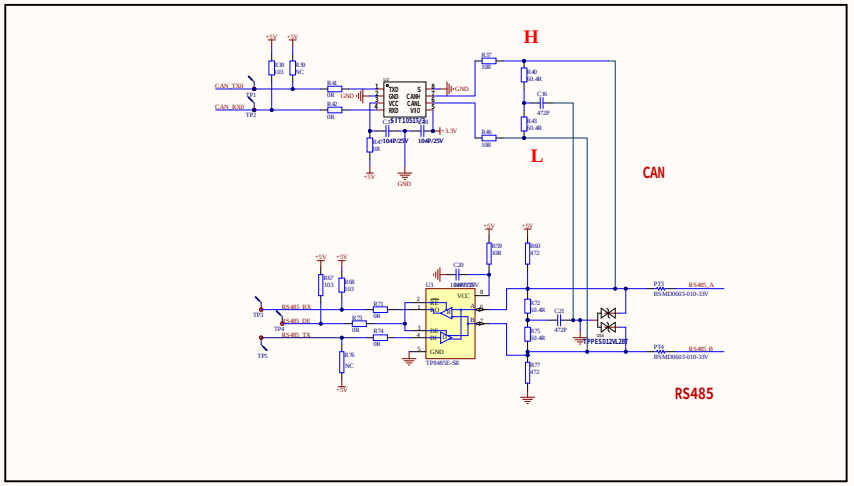

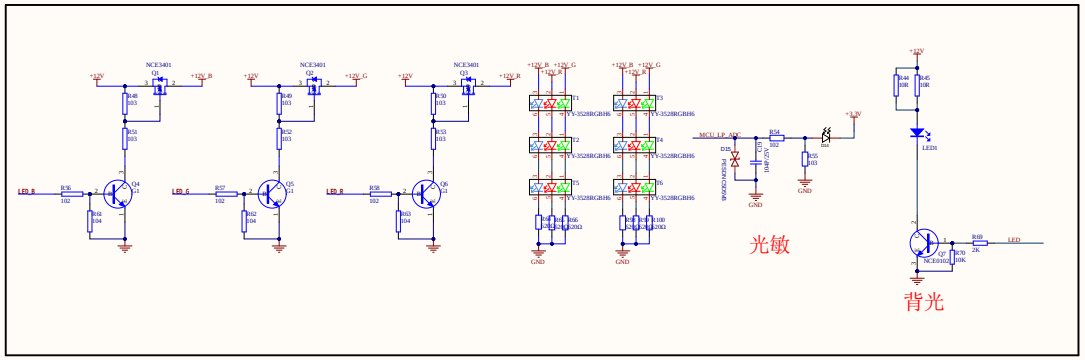

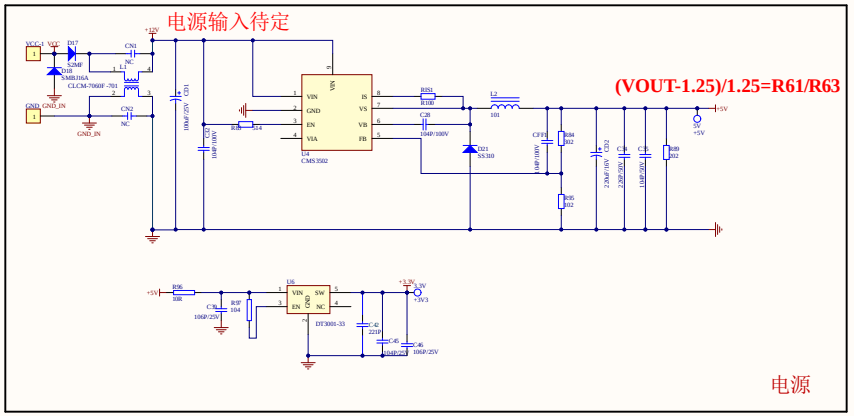

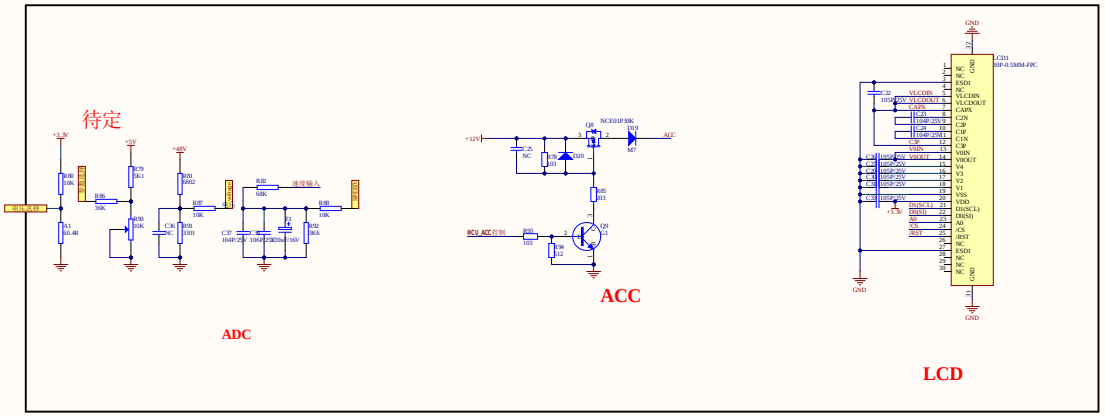

Title		
Size A1	Number	Revision
Date: 12/26/2023	Sheet of	
File: D:\产品\电子\B_小板\产品 IP67\BB.DB	Drawn By: Bibee	