1

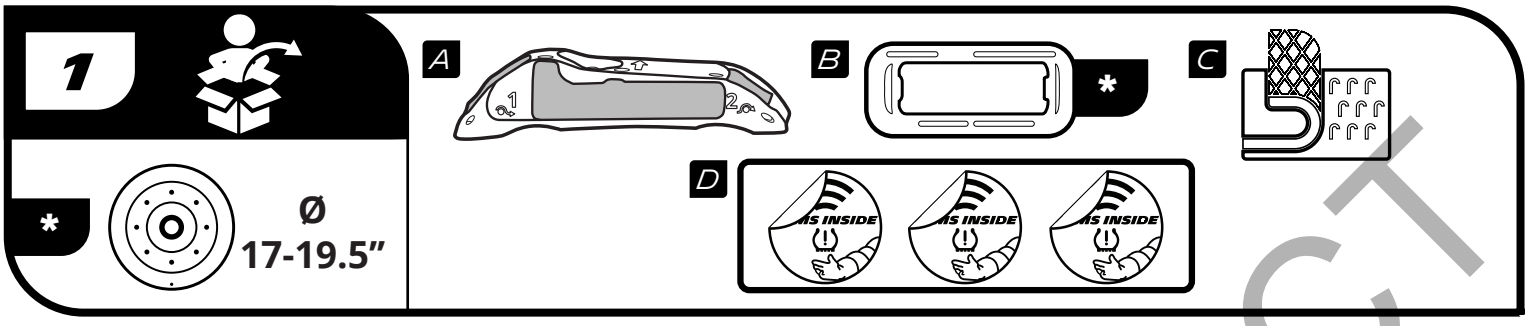

2

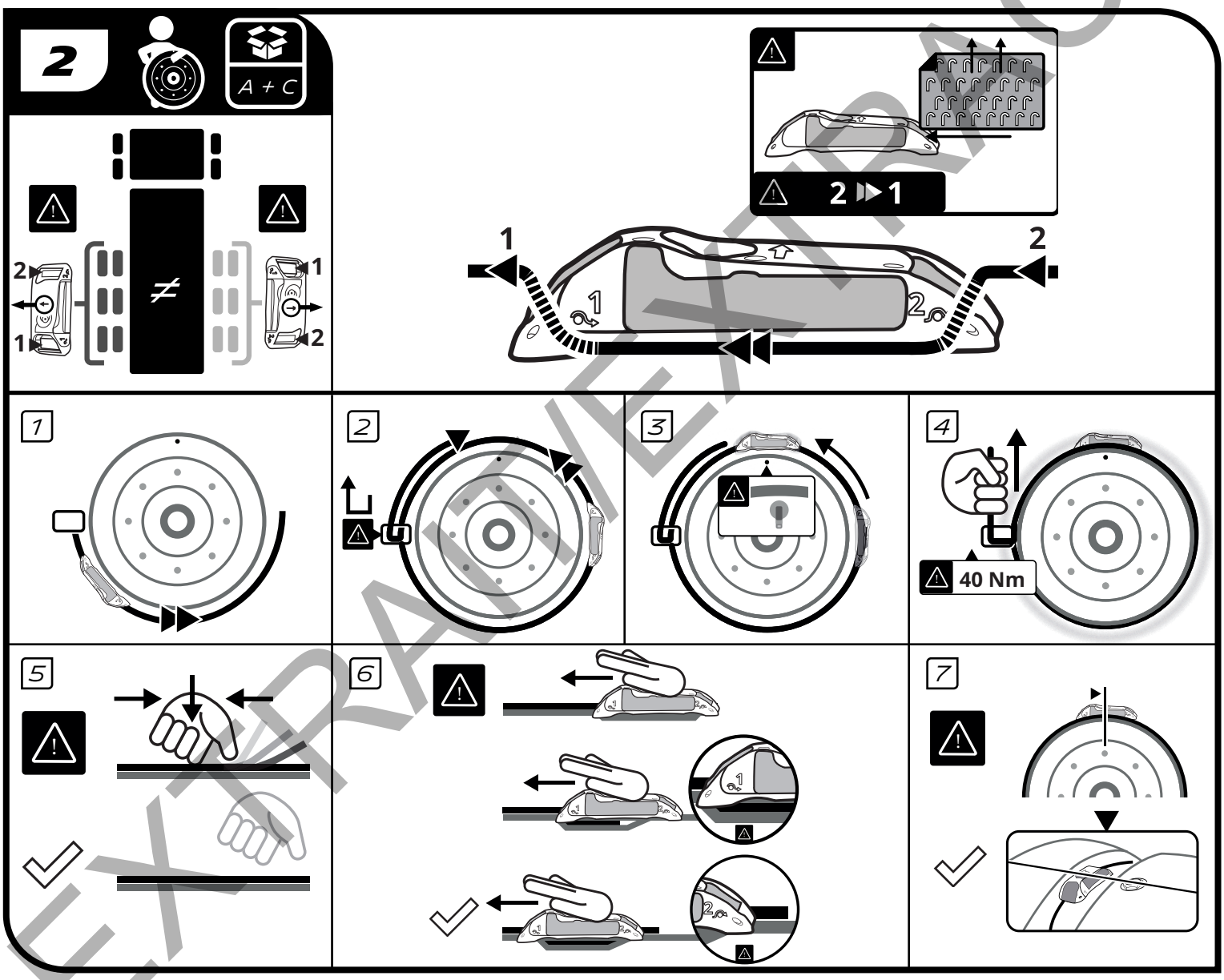

3

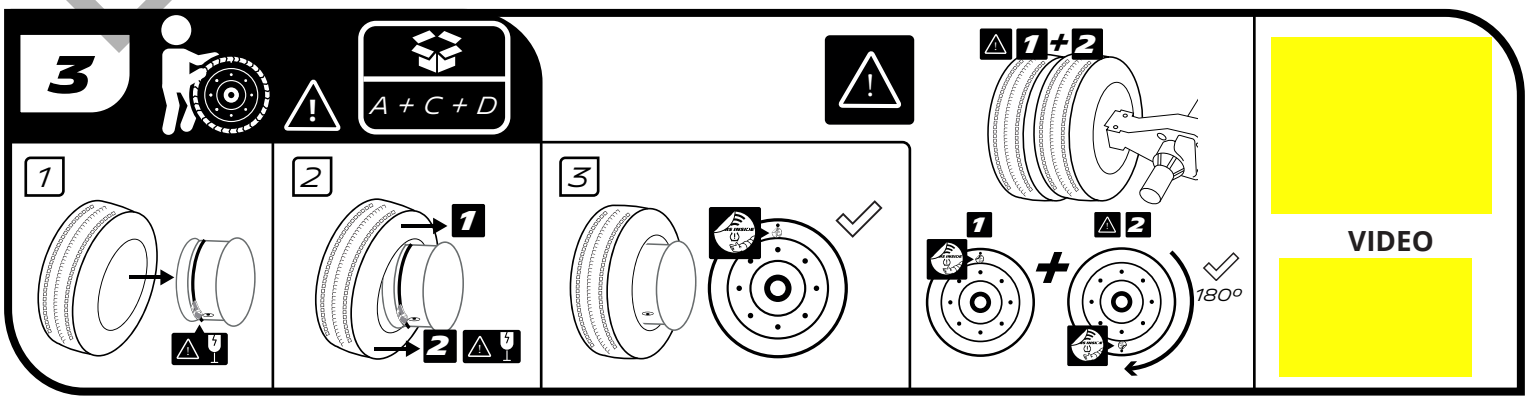

EXTRAIT/EXTRACT