All IC's use +5V unless otherwise noted

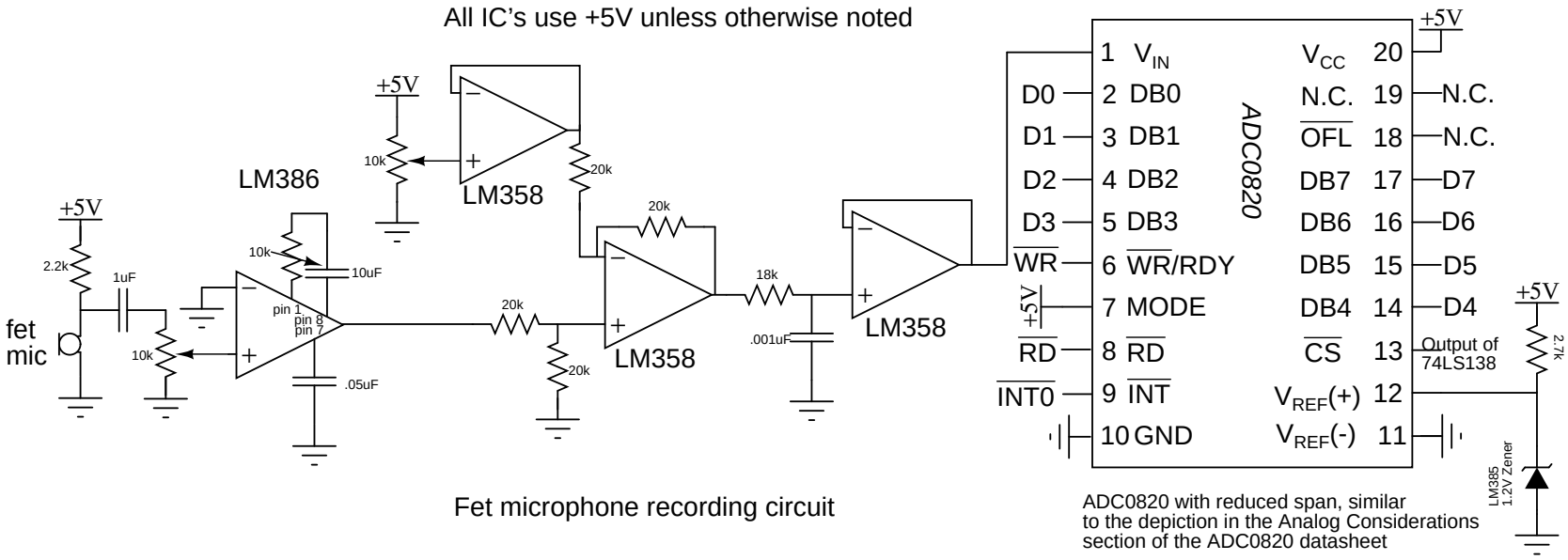

Fet microphone recording circuit

ADC0820 with reduced span, similar to the depiction in the Analog Considerations section of the ADC0820 datasheet

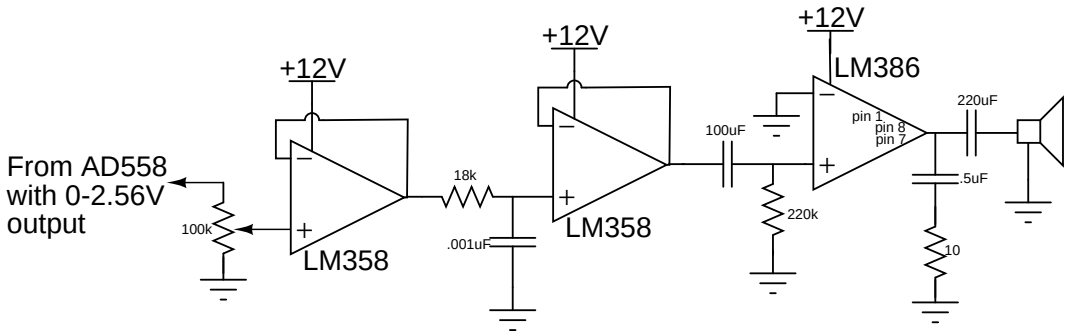

Speaker playback circuit

NOTE: The 12V IC's should be powered from the kit's variable power supply, not the kits fixed 12V supply, which is reserved for the R31-JP