TCP

❶ 정상적인 트래픽 전송 과정

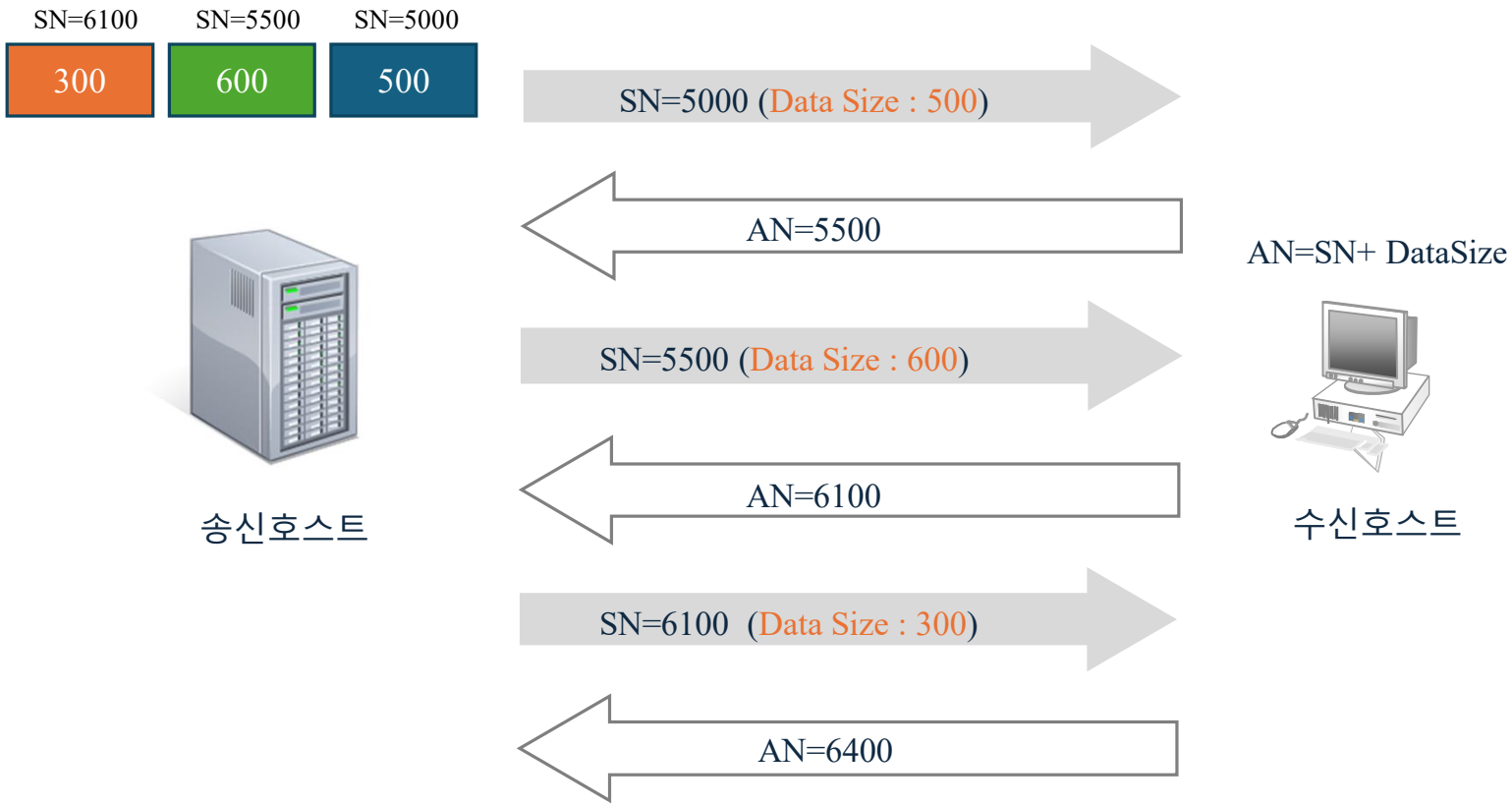

❷ 비정상적인 트래픽 전송 과정

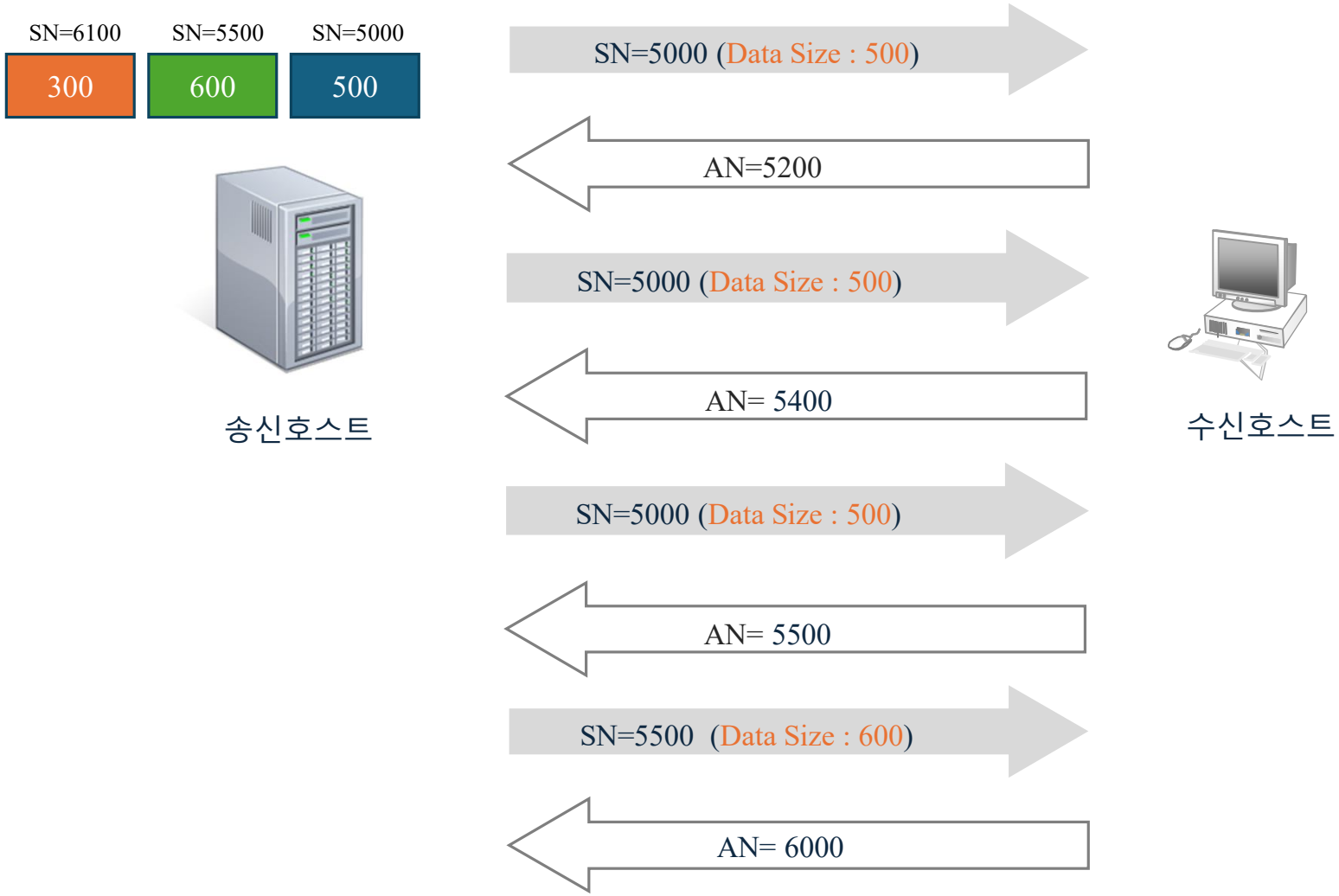

트래픽 흐름제어

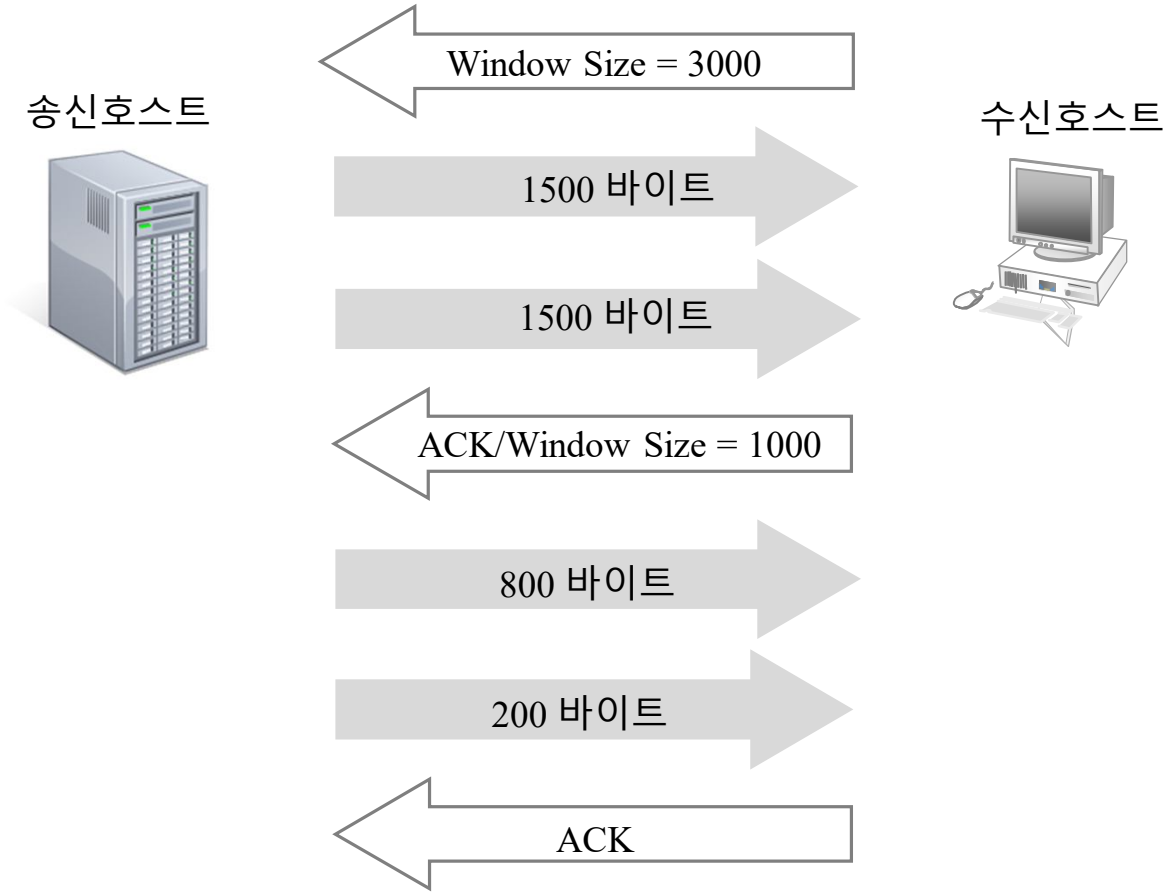
Window Size = 3000
송신호스트
수신호스트
1500 바이트
1500 바이트
ACK/Window Size = 1000
800 바이트
200 바이트
ACK

TCP 연결 종료(4-way Handshake)

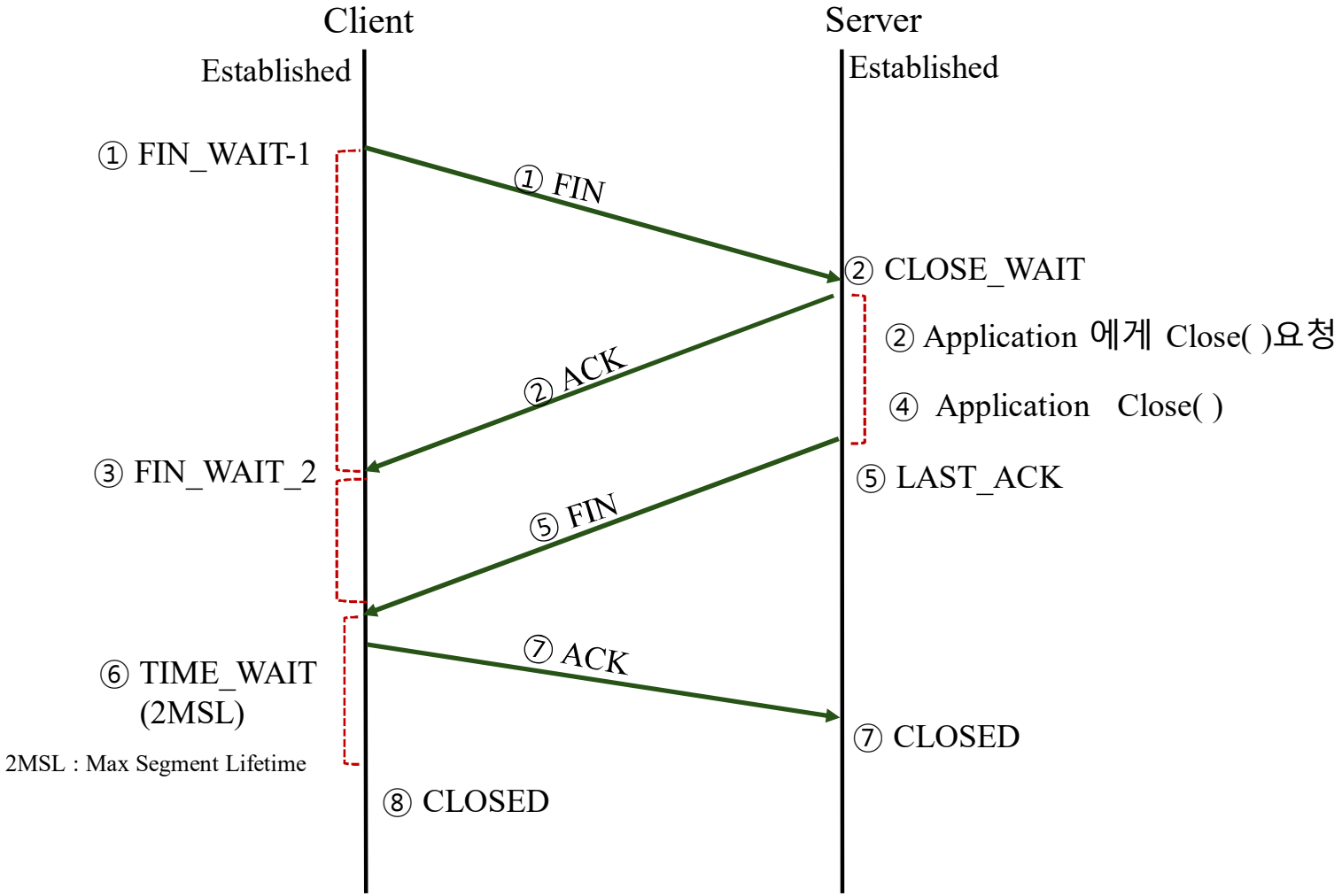

UDP 외부망 트래픽 흐름

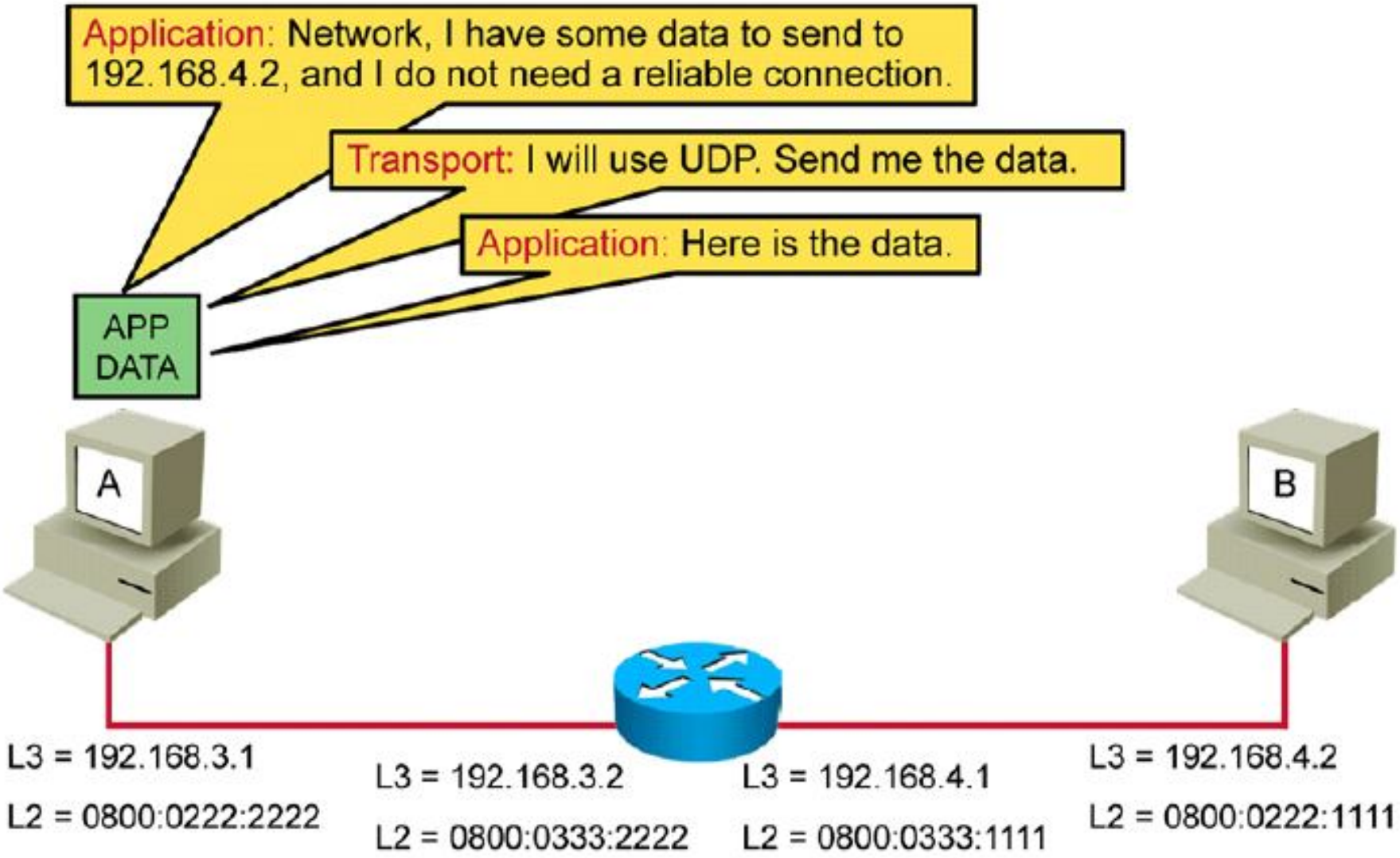
Application: Network, I have some data to send to 192.168.4.2, and I do not need a reliable connection.
Transport: I will use UDP. Send me the data.
Application: Here is the data.
APP DATA
A
B
L3 = 192.168.3.1
L2 = 0800:0222:2222
L3 = 192.168.3.2
L2 = 0800:0333:2222
L3 = 192.168.4.1
L2 = 0800:0333:1111
L3 = 192.168.4.2
L2 = 0800:0222:1111

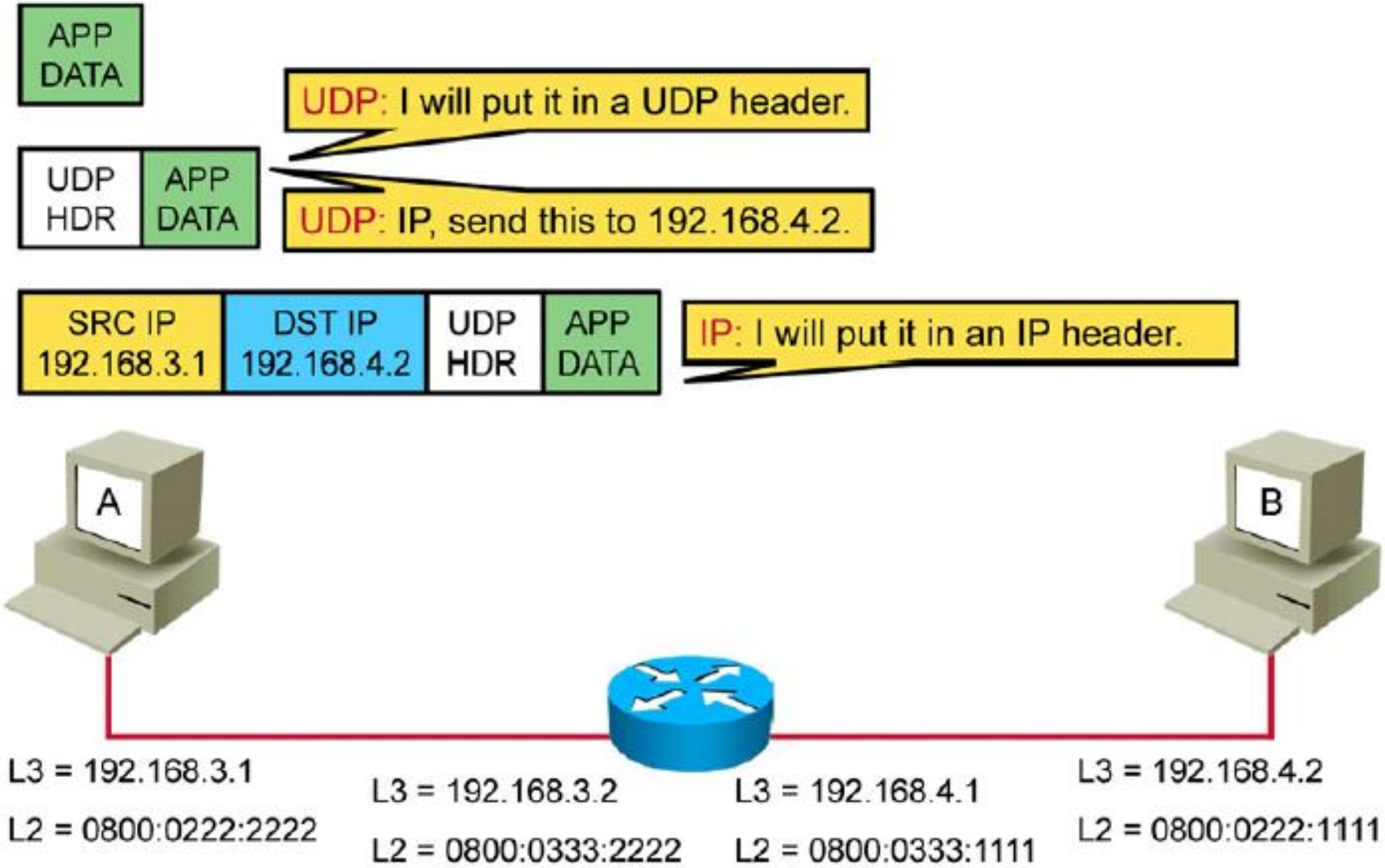
APP DATA
UDP: I will put it in a UDP header.
UDP HDR
APP DATA
UDP: IP, send this to 192.168.4.2.
SRC IP 192.168.3.1
DST IP 192.168.4.2
UDP HDR
APP DATA
IP: I will put it in an IP header.
A
B
L3 = 192.168.3.1
L2 = 0800:0222:2222
L3 = 192.168.3.2
L2 = 0800:0333:2222
L3 = 192.168.4.1
L2 = 0800:0333:1111
L3 = 192.168.4.2
L2 = 0800:0222:1111

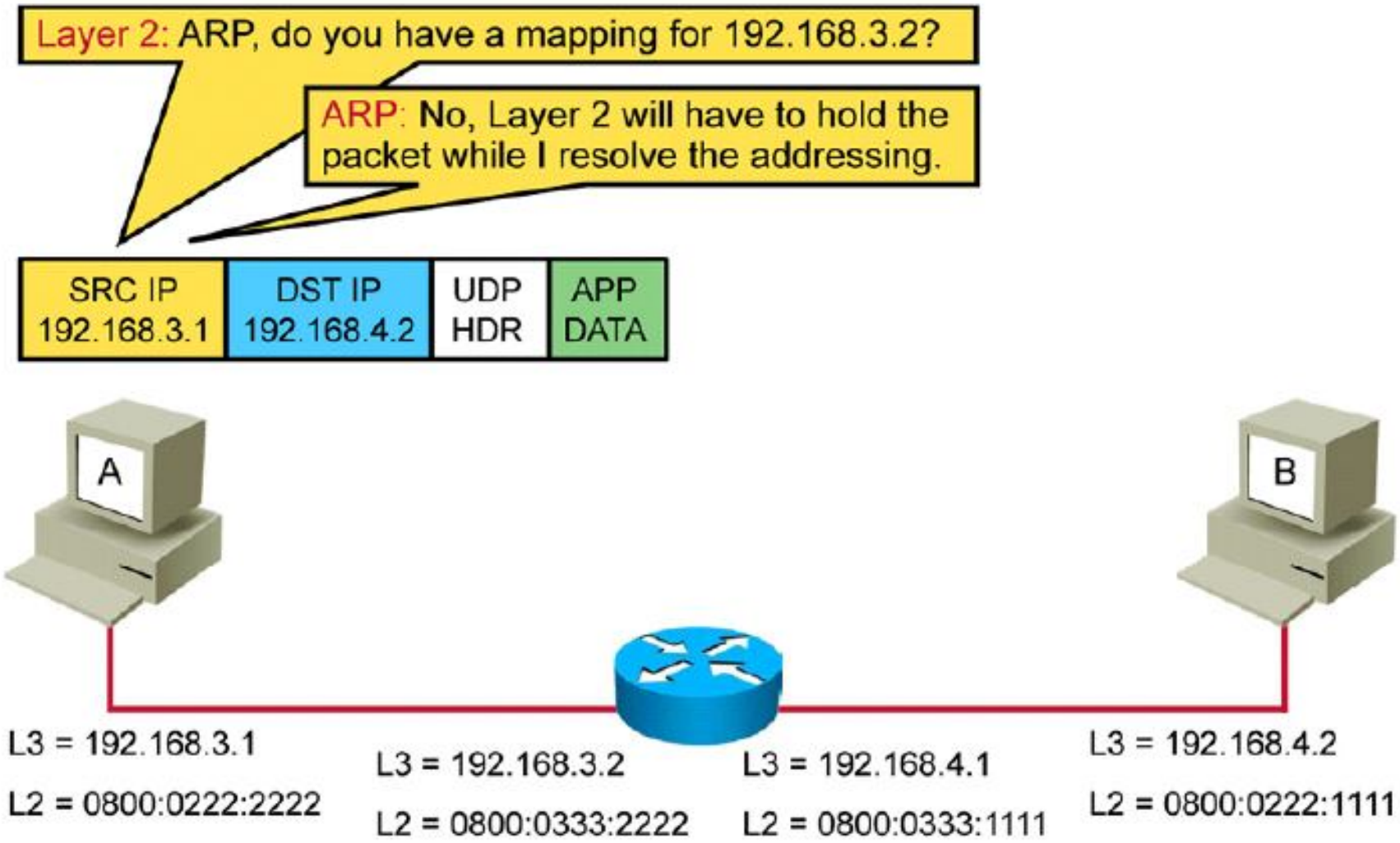
Layer 2: ARP, do you have a mapping for 192.168.3.2?
ARP: No, Layer 2 will have to hold the packet while I resolve the addressing.
SRC IP 192.168.3.1
DST IP 192.168.4.2
UDP HDR
APP DATA
A
B
L3 = 192.168.3.1
L2 = 0800:0222:2222
L3 = 192.168.3.2
L2 = 0800:0333:2222
L3 = 192.168.4.1
L2 = 0800:0333:1111
L3 = 192.168.4.2
L2 = 0800:0222:1111

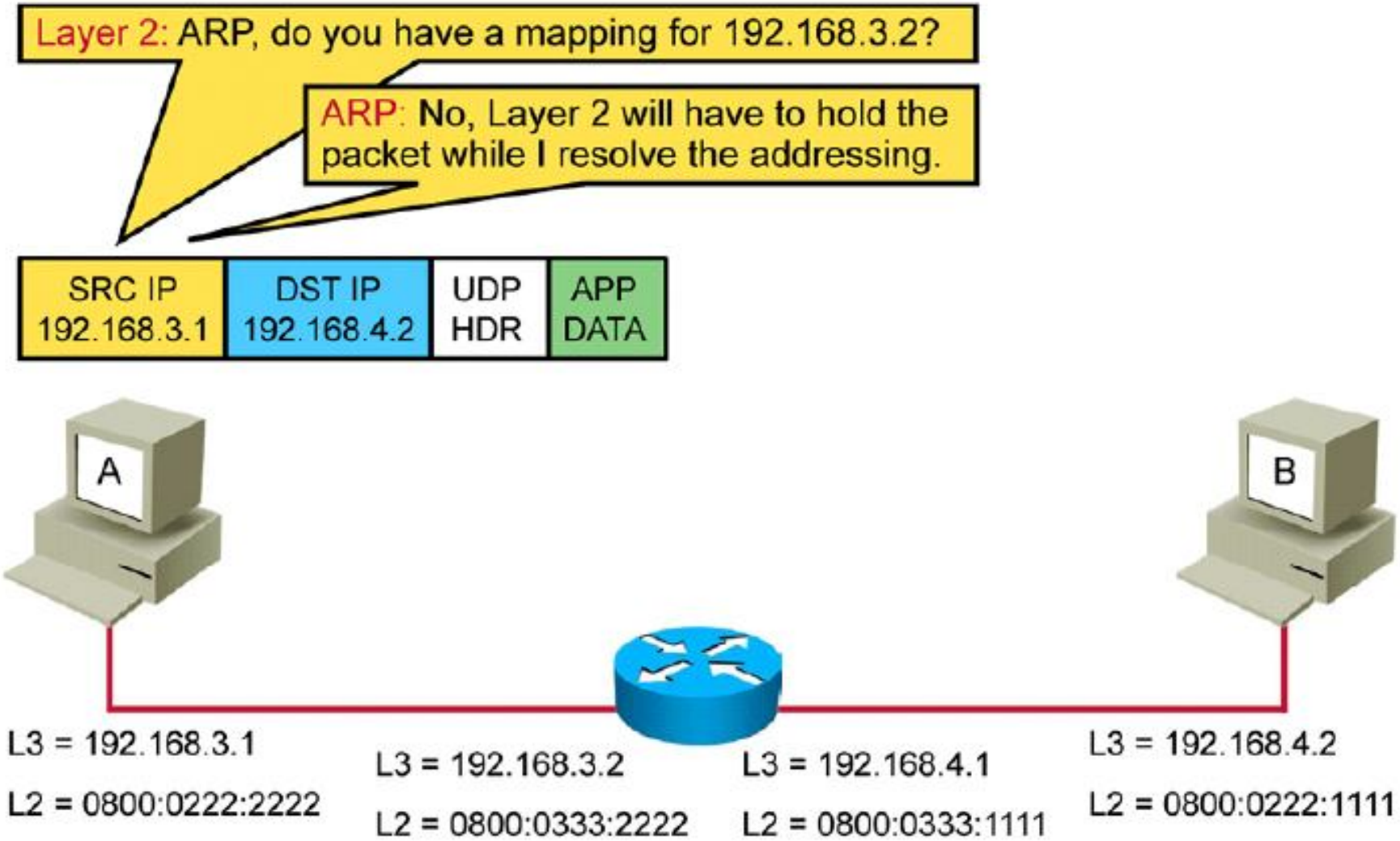
Layer 2: ARP, do you have a mapping for 192.168.3.2?
ARP: No, Layer 2 will have to hold the packet while I resolve the addressing.
SRC IP 192.168.3.1
DST IP 192.168.4.2
UDP HDR
APP DATA
A
B
L3 = 192.168.3.1
L2 = 0800:0222:2222
L3 = 192.168.3.2
L2 = 0800:0333:2222
L3 = 192.168.4.1
L2 = 0800:0333:1111
L3 = 192.168.4.2
L2 = 0800:0222:1111

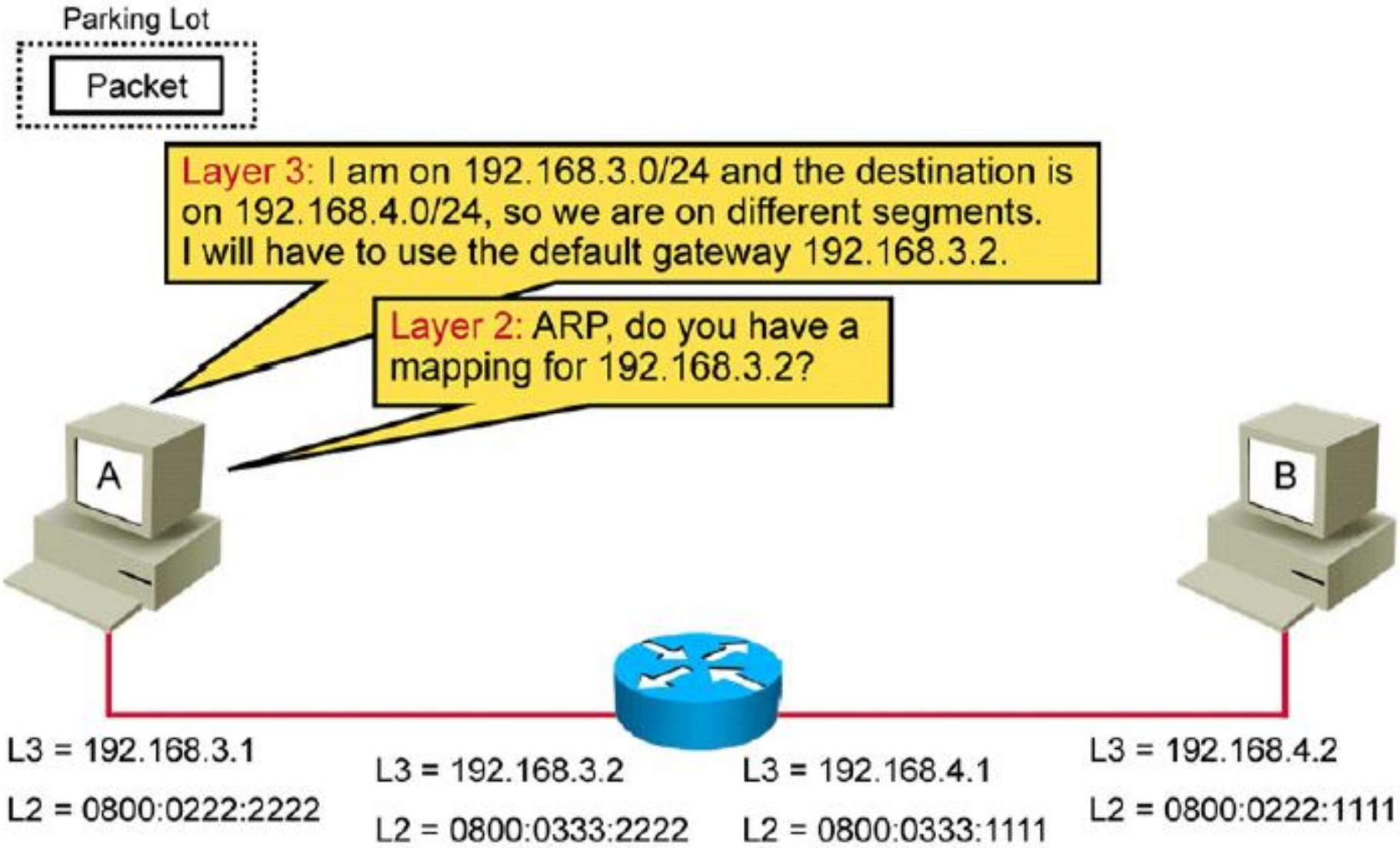
Parking Lot
Packet
Layer 3: I am on 192.168.3.0/24 and the destination is on 192.168.4.0/24, so we are on different segments. I will have to use the default gateway 192.168.3.2.
Layer 2: ARP, do you have a mapping for 192.168.3.2?
A
B
L3 = 192.168.3.1
L2 = 0800:0222:2222
L3 = 192.168.3.2
L2 = 0800:0333:2222
L3 = 192.168.4.1
L2 = 0800:0333:1111
L3 = 192.168.4.2
L2 = 0800:0222:1111

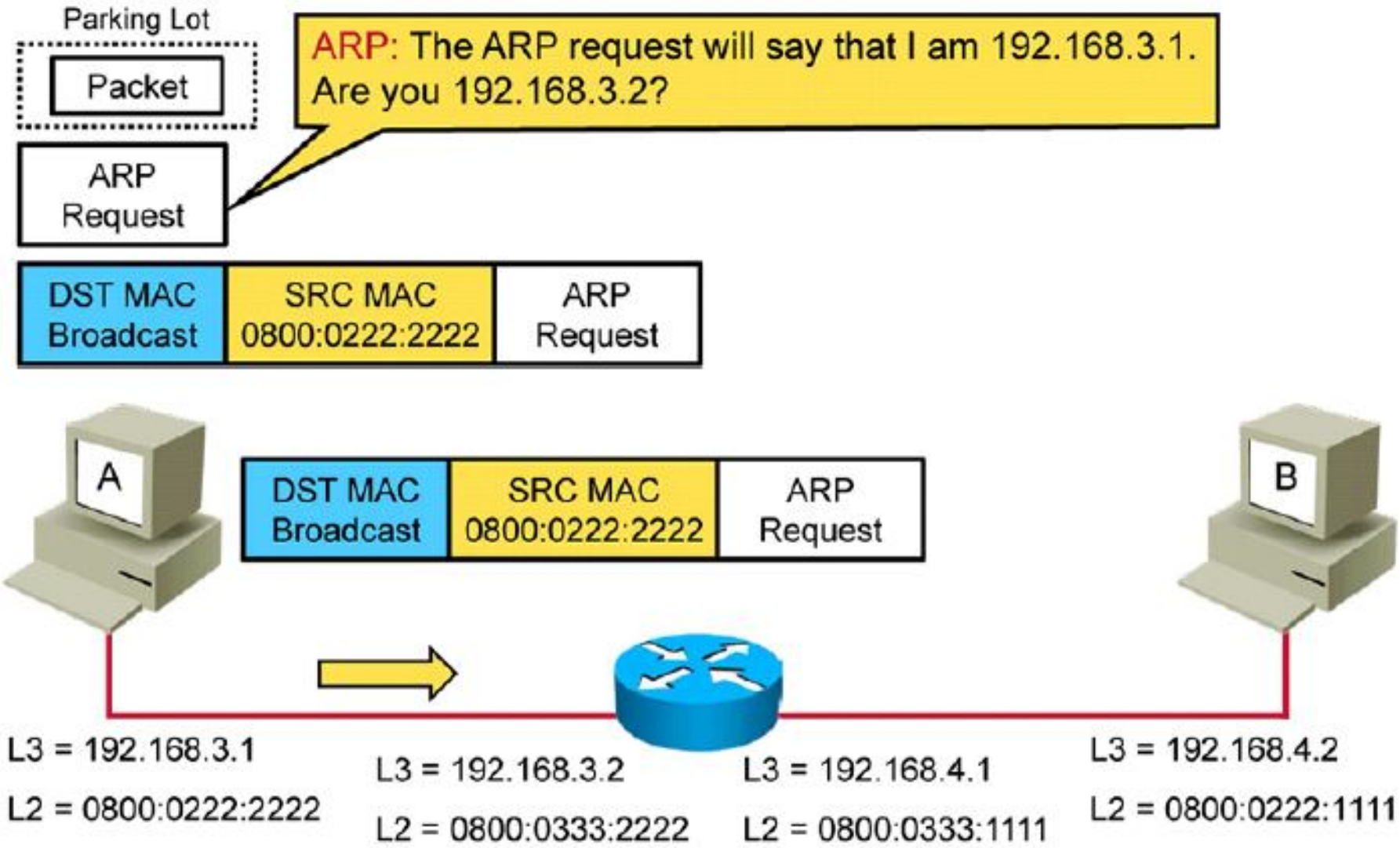
Parking Lot
Packet
ARP: The ARP request will say that I am 192.168.3.1. Are you 192.168.3.2?
ARP Request
DST MAC Broadcast
SRC MAC 0800:0222:2222
ARP Request
A
DST MAC Broadcast
SRC MAC 0800:0222:2222
ARP Request
B
L3 = 192.168.3.1
L2 = 0800:0222:2222
L3 = 192.168.3.2
L2 = 0800:0333:2222
L3 = 192.168.4.1
L2 = 0800:0333:1111
L3 = 192.168.4.2
L2 = 0800:0222:1111

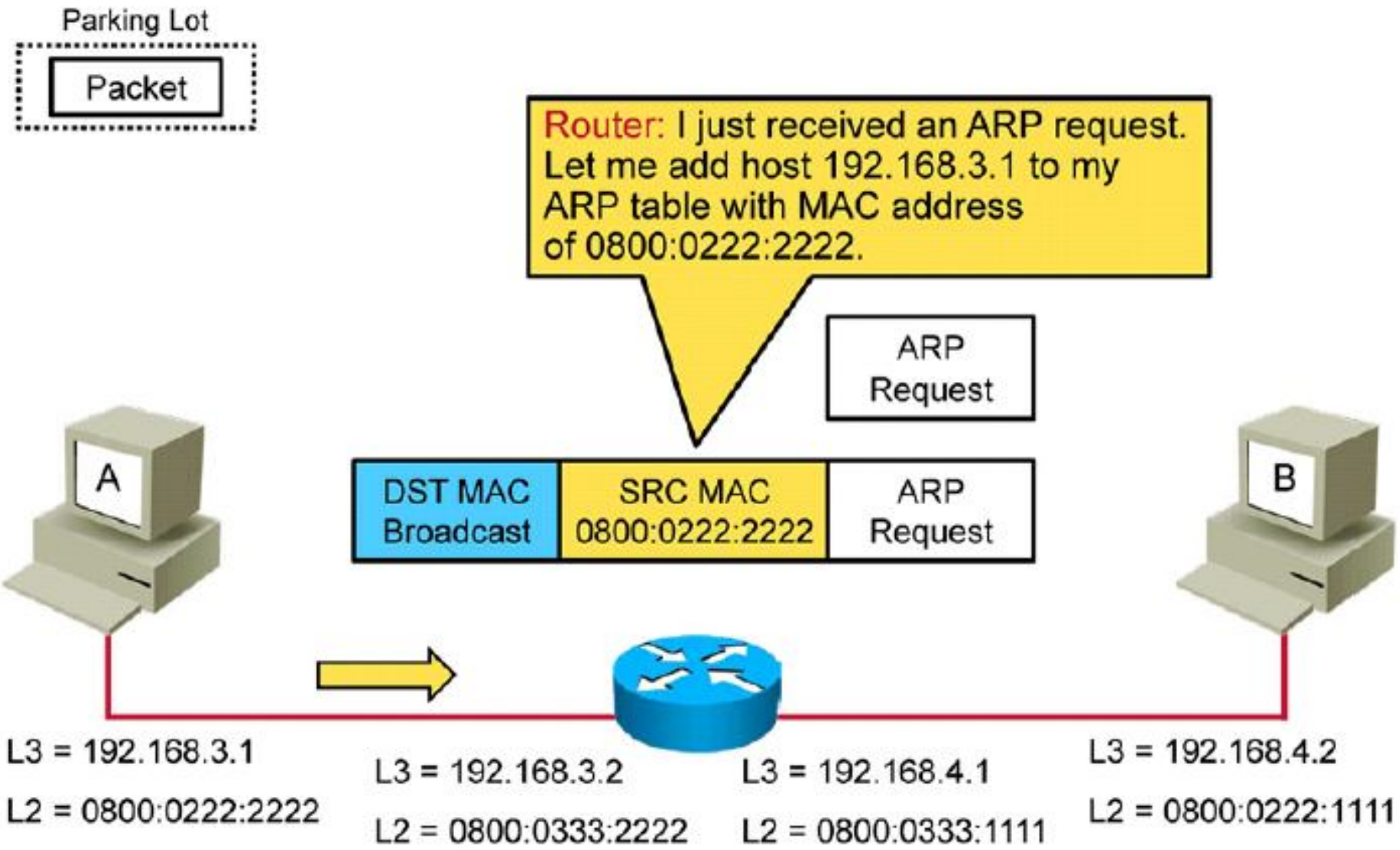
Parking Lot
Packet
Router: I just received an ARP request. Let me add host 192.168.3.1 to my ARP table with MAC address of 0800:0222:2222.
ARP Request
A
B
DST MAC Broadcast
SRC MAC 0800:0222:2222
ARP Request
L3 = 192.168.3.1
L2 = 0800:0222:2222
L3 = 192.168.3.2
L2 = 0800:0333:2222
L3 = 192.168.4.1
L2 = 0800:0333:1111
L3 = 192.168.4.2
L2 = 0800:0222:1111

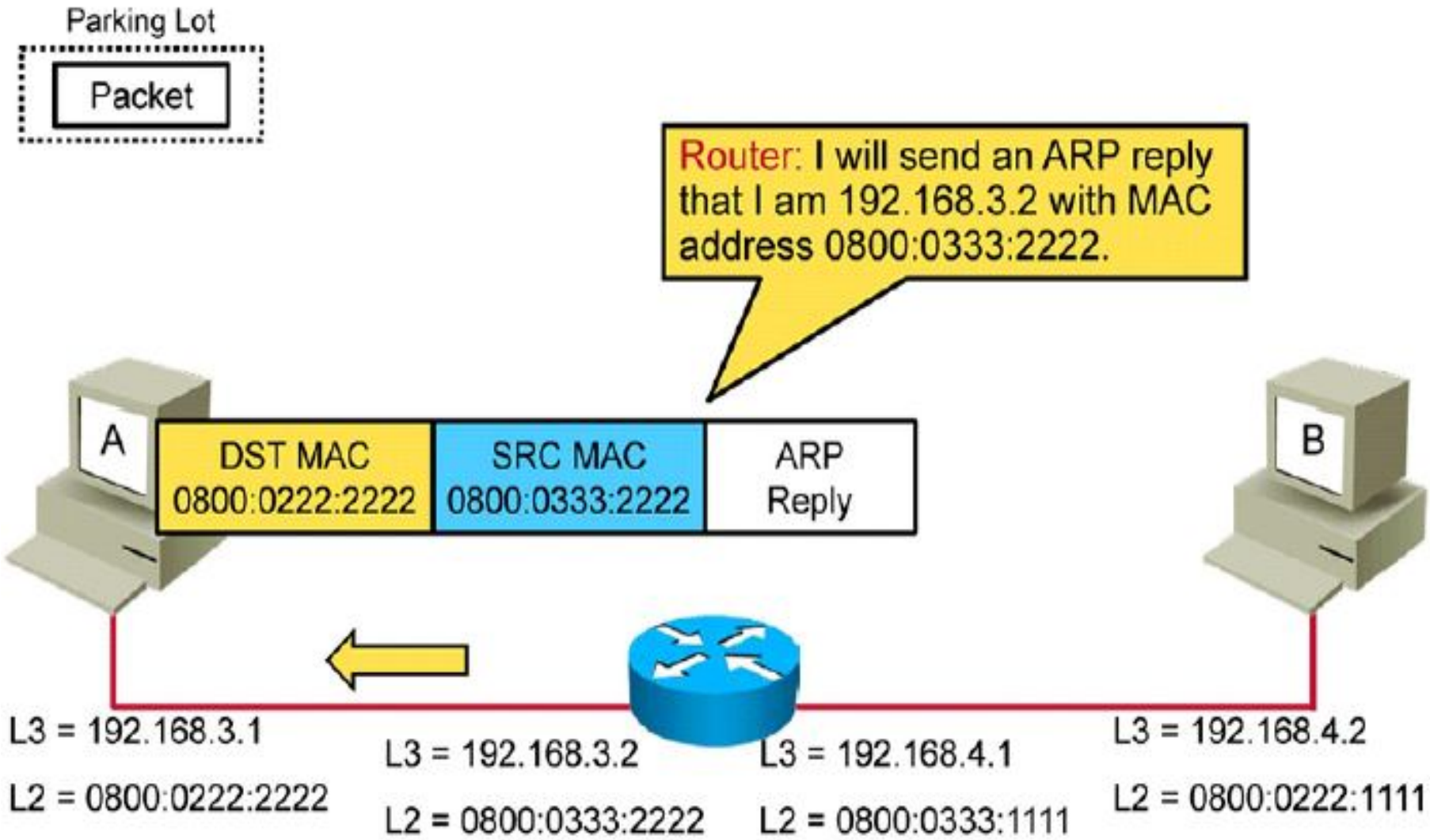
Parking Lot
Packet
Router: I will send an ARP reply that I am 192.168.3.2 with MAC address 0800:0333:2222.
A
DST MAC
0800:0222:2222
SRC MAC
0800:0333:2222
ARP
Reply
B
L3 = 192.168.3.1
L2 = 0800:0222:2222
L3 = 192.168.3.2
L2 = 0800:0333:2222
L3 = 192.168.4.1
L2 = 0800:0333:1111
L3 = 192.168.4.2
L2 = 0800:0222:1111

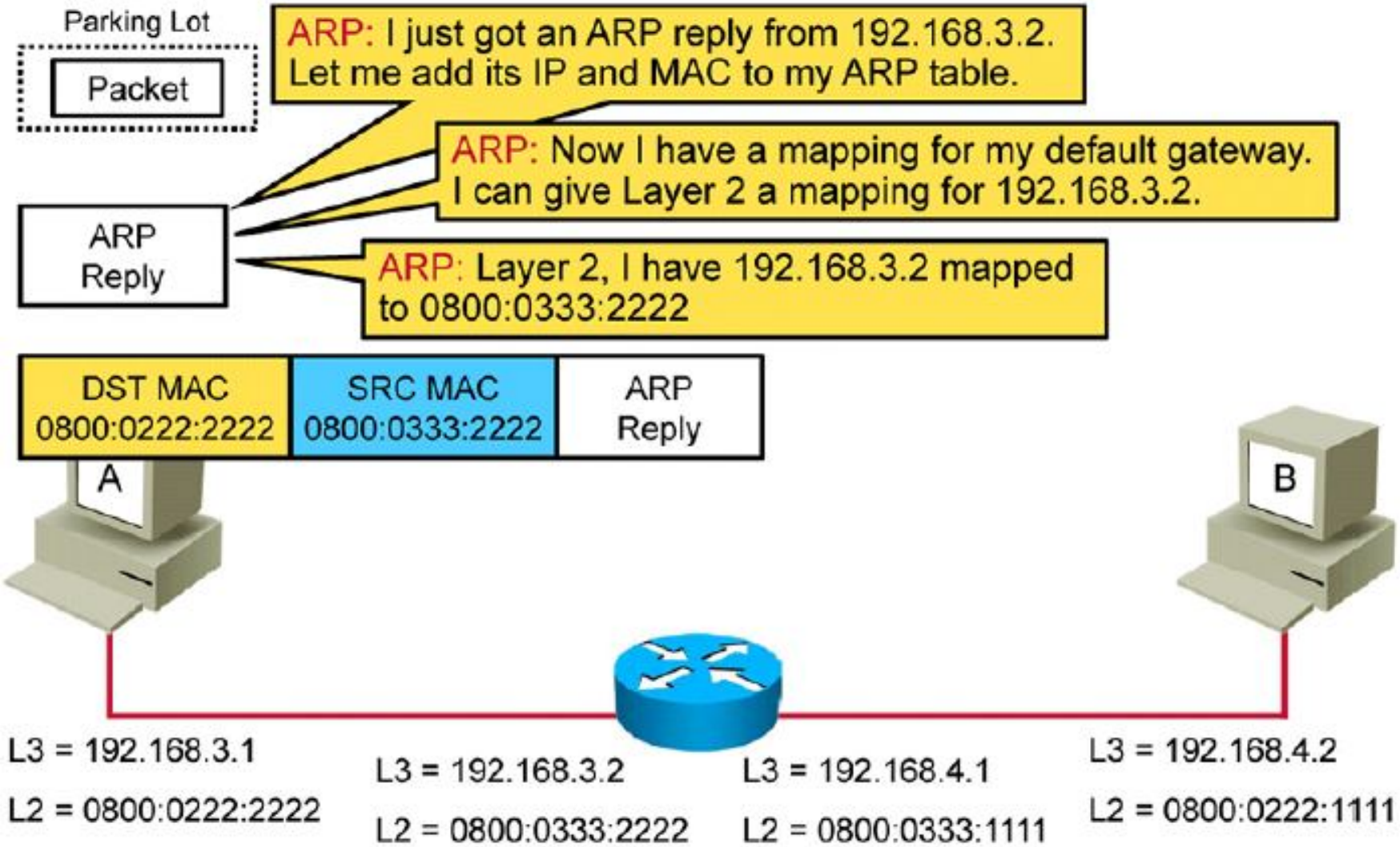
Parking Lot
Packet
ARP: I just got an ARP reply from 192.168.3.2. Let me add its IP and MAC to my ARP table.
ARP: Now I have a mapping for my default gateway. I can give Layer 2 a mapping for 192.168.3.2.
ARP Reply
ARP: Layer 2, I have 192.168.3.2 mapped to 0800:0333:2222
DST MAC 0800:0222:2222
SRC MAC 0800:0333:2222
ARP Reply
A
B
L3 = 192.168.3.1
L2 = 0800:0222:2222
L3 = 192.168.3.2
L2 = 0800:0333:2222
L3 = 192.168.4.1
L2 = 0800:0333:1111
L3 = 192.168.4.2
L2 = 0800:0222:1111

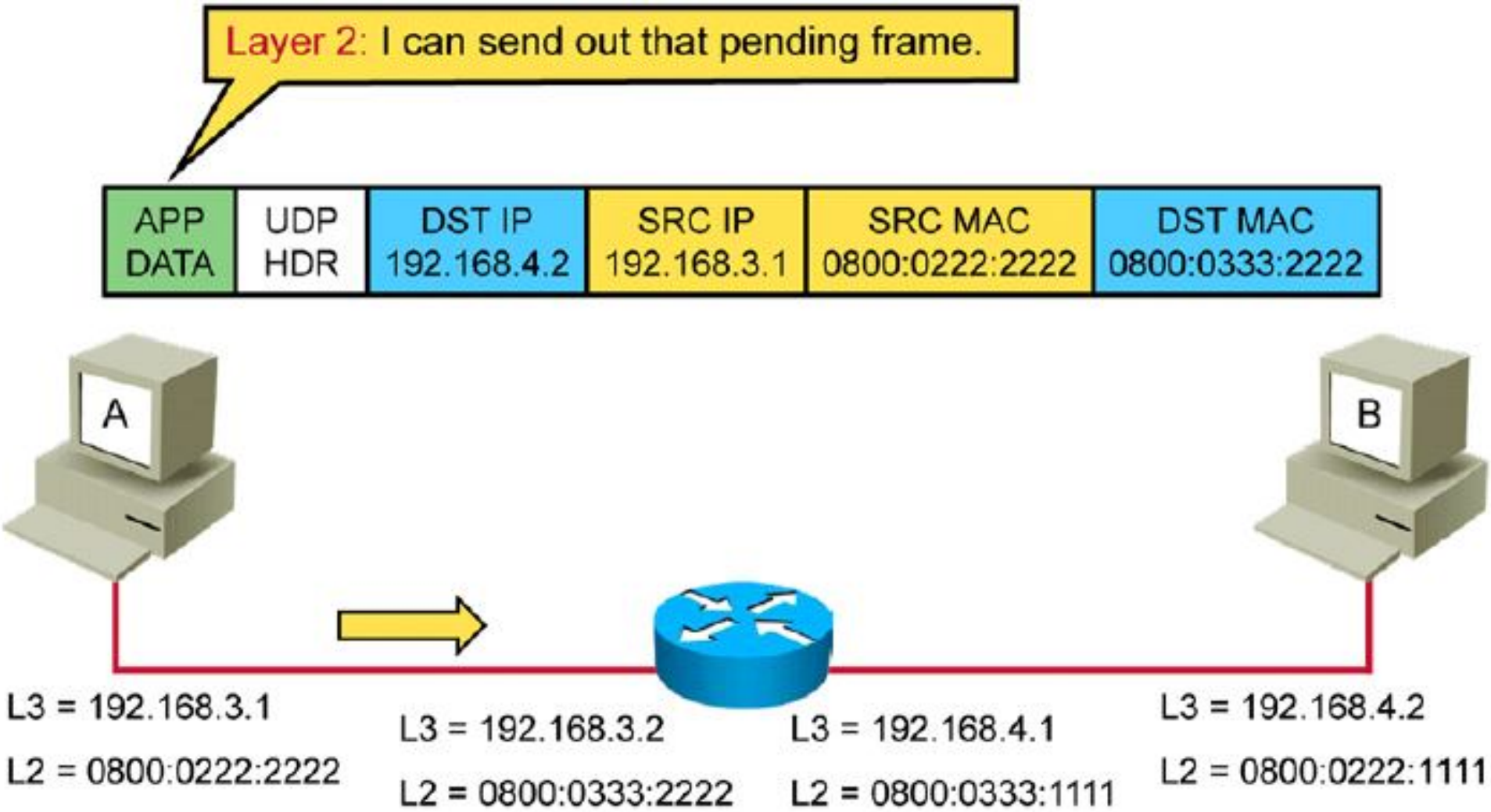
Layer 2: I can send out that pending frame.
APP DATA
UDP HDR
DST IP 192.168.4.2
SRC IP 192.168.3.1
SRC MAC 0800:0222:2222
DST MAC 0800:0333:2222
A
B
L3 = 192.168.3.1
L2 = 0800:0222:2222
L3 = 192.168.3.2
L2 = 0800:0333:2222
L3 = 192.168.4.1
L2 = 0800:0333:1111
L3 = 192.168.4.2
L2 = 0800:0222:1111

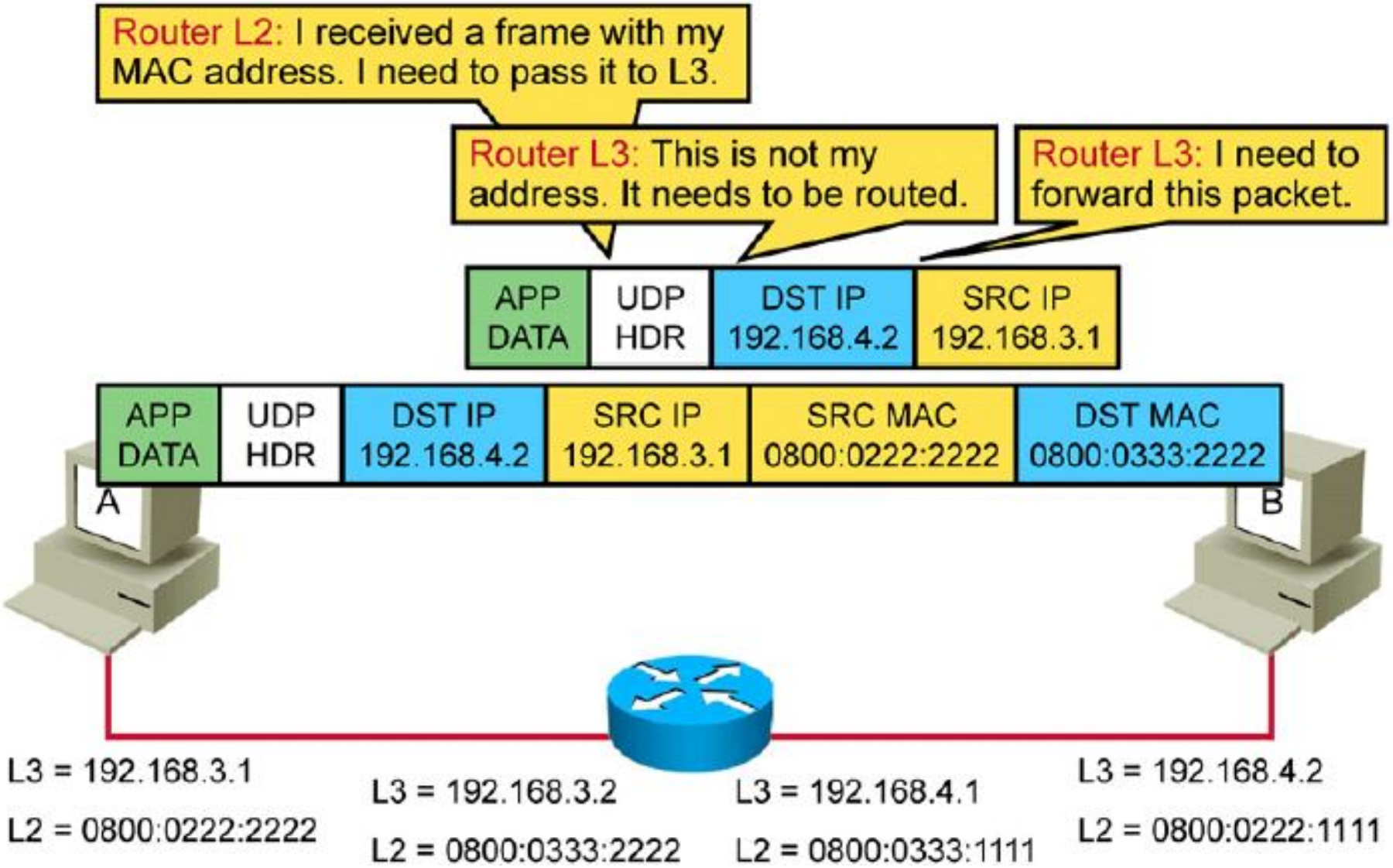
Router L2: I received a frame with my MAC address. I need to pass it to L3.
Router L3: This is not my address. It needs to be routed.
Router L3: I need to forward this packet.
APP DATA
UDP HDR
DST IP 192.168.4.2
SRC IP 192.168.3.1
APP DATA
UDP HDR
DST IP 192.168.4.2
SRC IP 192.168.3.1
SRC MAC 0800:0222:2222
DST MAC 0800:0333:2222
A
B
L3 = 192.168.3.1
L2 = 0800:0222:2222
L3 = 192.168.3.2
L2 = 0800:0333:2222
L3 = 192.168.4.1
L2 = 0800:0333:1111
L3 = 192.168.4.2
L2 = 0800:0222:1111

Destination	Next Hop	Interface
192.168.3.0/24	Connected	Gi 0/0
192.168.4.0/24	Connected	Gi 0/1

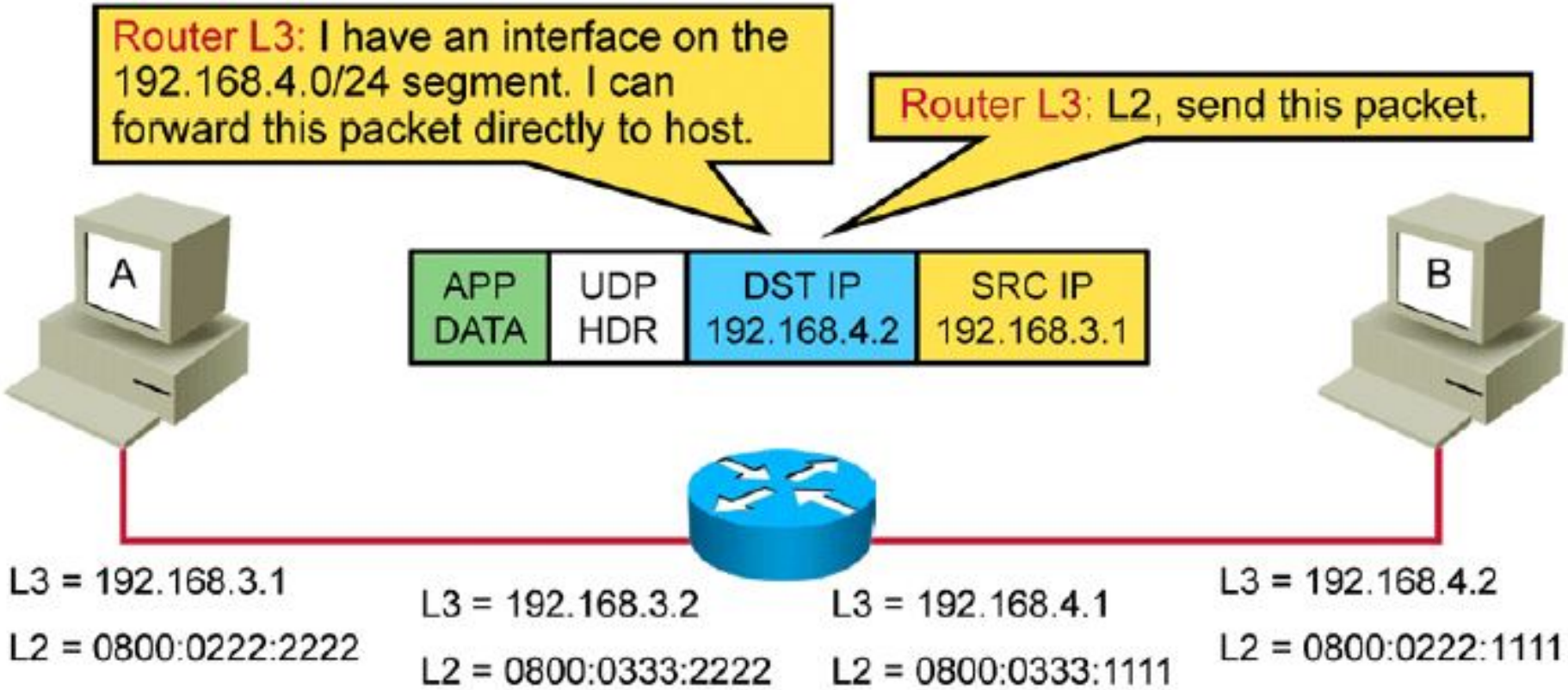

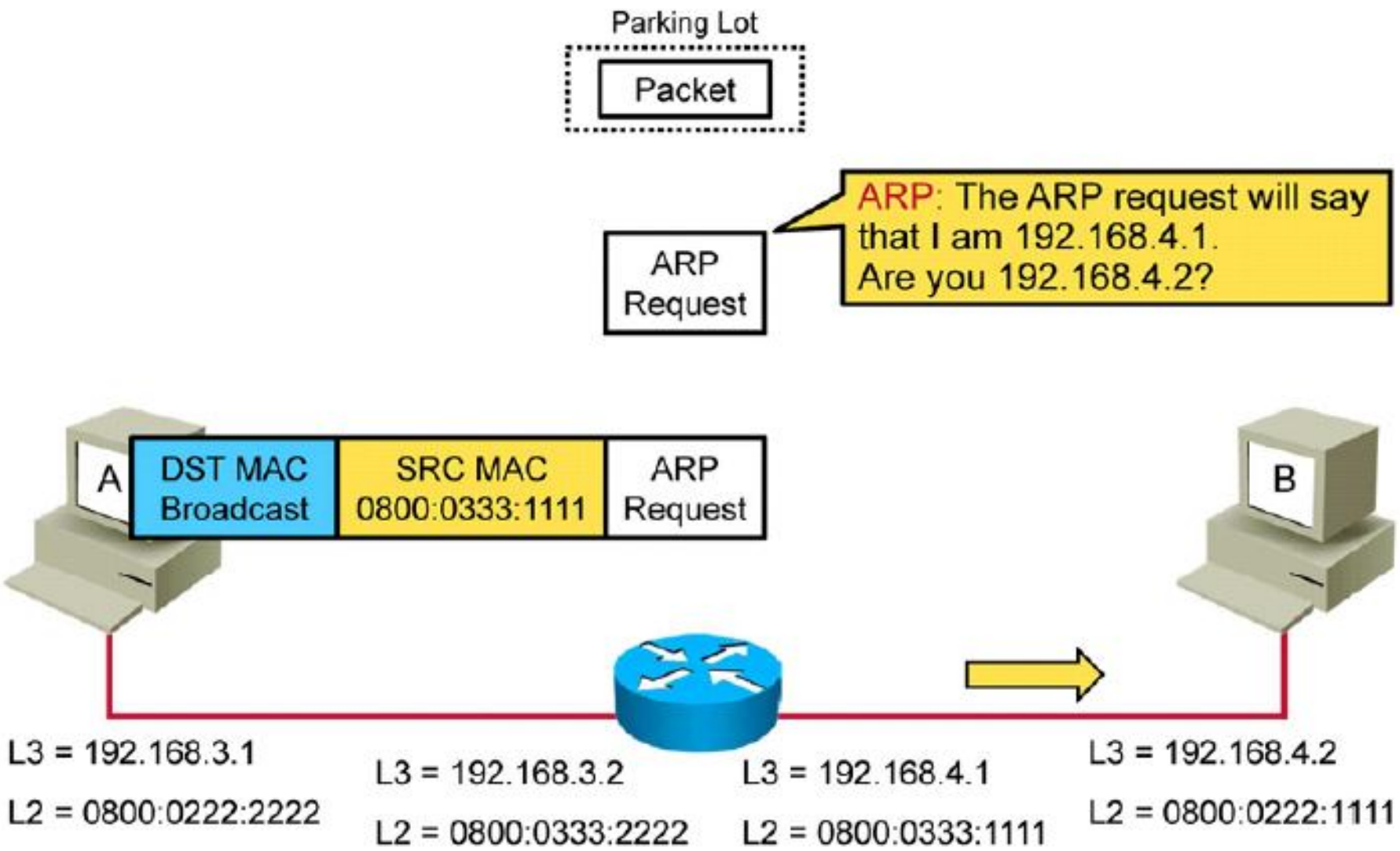
Parking Lot
Packet
ARP Request
ARP: The ARP request will say that I am 192.168.4.1. Are you 192.168.4.2?
A
DST MAC Broadcast
SRC MAC 0800:0333:1111
ARP Request
B
L3 = 192.168.3.1
L2 = 0800:0222:2222
L3 = 192.168.3.2
L2 = 0800:0333:2222
L3 = 192.168.4.1
L2 = 0800:0333:1111
L3 = 192.168.4.2
L2 = 0800:0222:1111

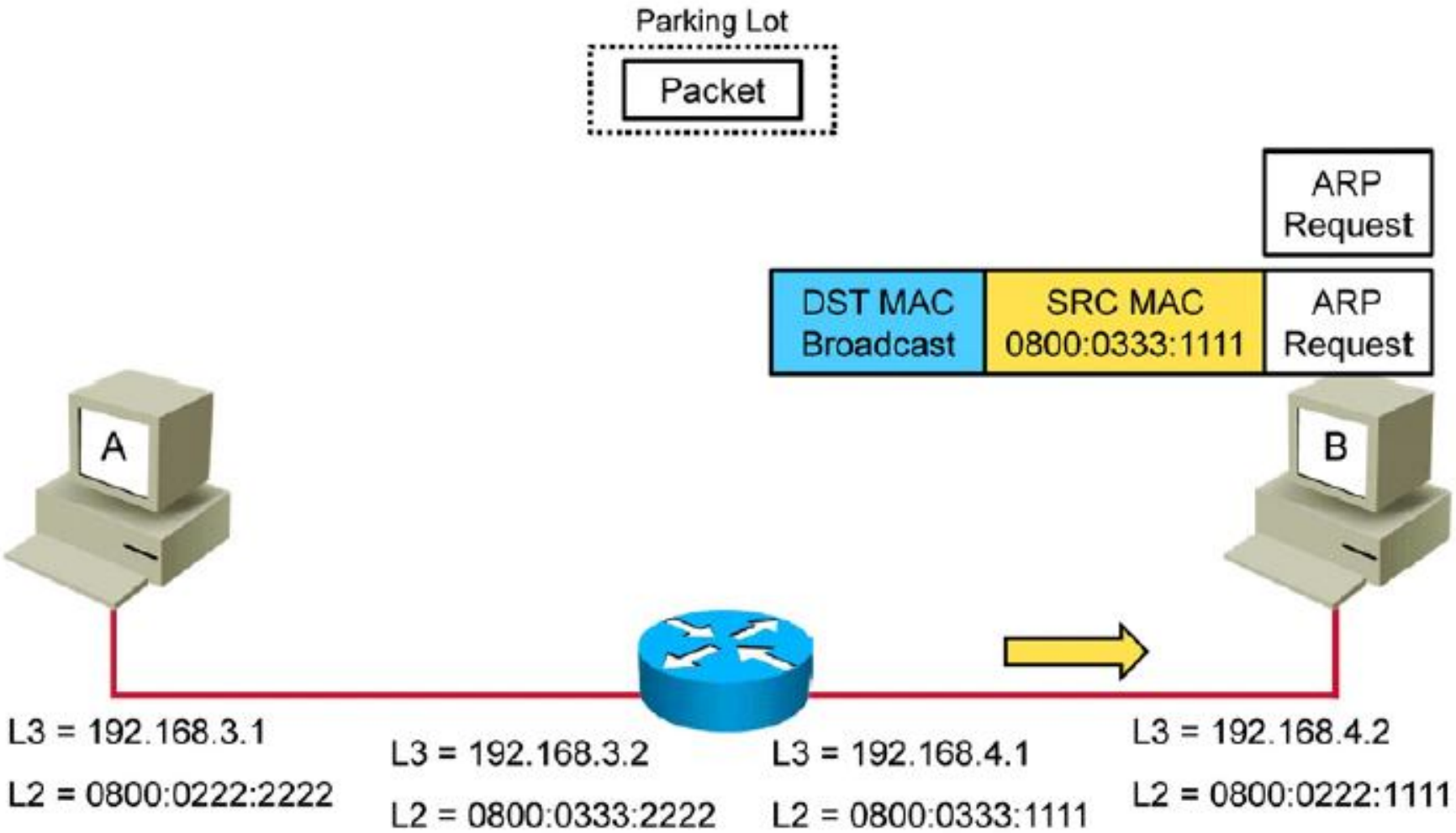
Parking Lot
Packet
ARP Request
DST MAC Broadcast
SRC MAC 0800:0333:1111
ARP Request
A
B
L3 = 192.168.3.1
L2 = 0800:0222:2222
L3 = 192.168.3.2
L2 = 0800:0333:2222
L3 = 192.168.4.1
L2 = 0800:0333:1111
L3 = 192.168.4.2
L2 = 0800:0222:1111

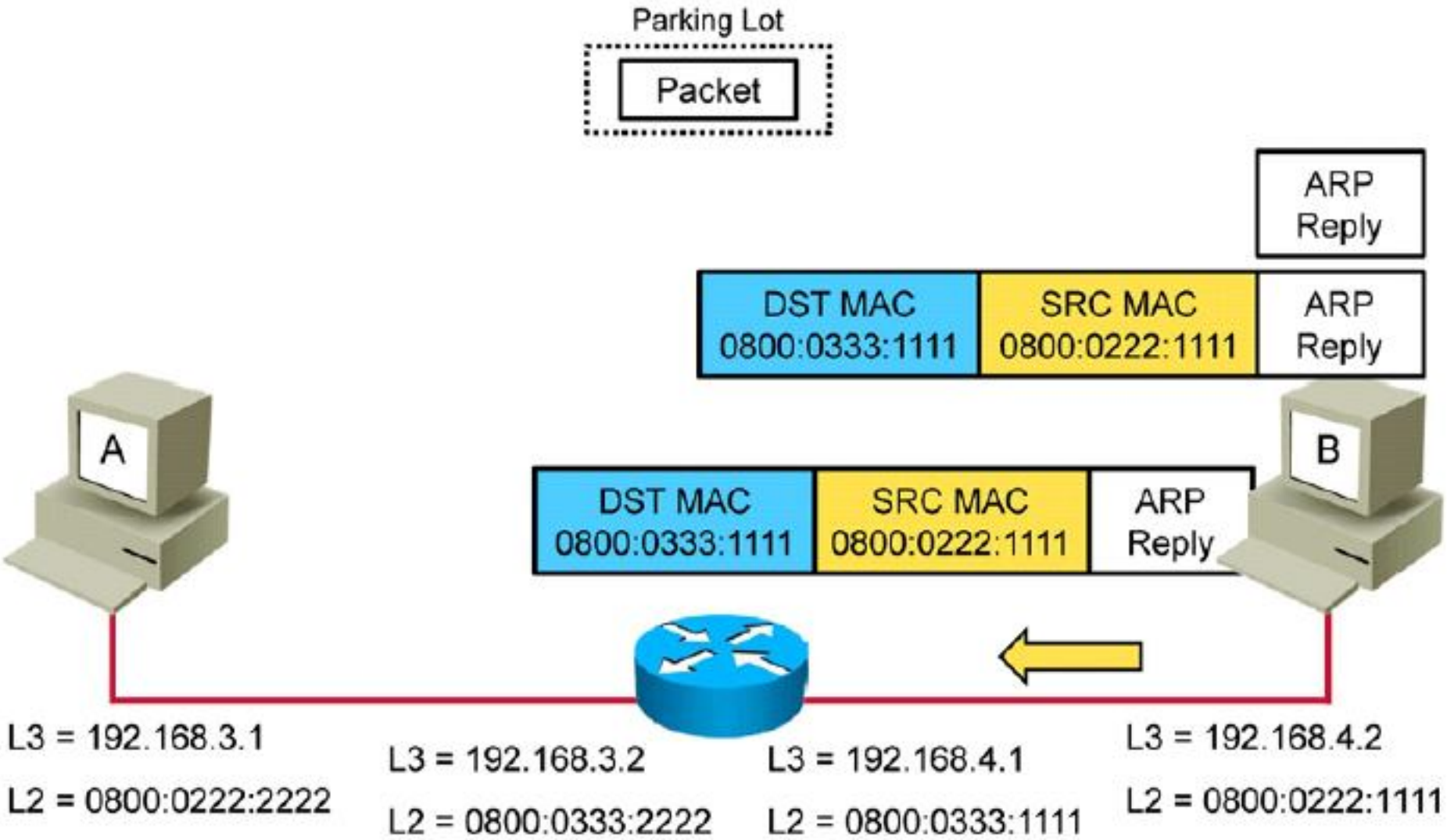
Parking Lot
Packet
ARP Reply
DST MAC 0800:0333:1111
SRC MAC 0800:0222:1111
ARP Reply
A
B
DST MAC 0800:0333:1111
SRC MAC 0800:0222:1111
ARP Reply
L3 = 192.168.3.1
L2 = 0800:0222:2222
L3 = 192.168.3.2
L2 = 0800:0333:2222
L3 = 192.168.4.1
L2 = 0800:0333:1111
L3 = 192.168.4.2
L2 = 0800:0222:1111

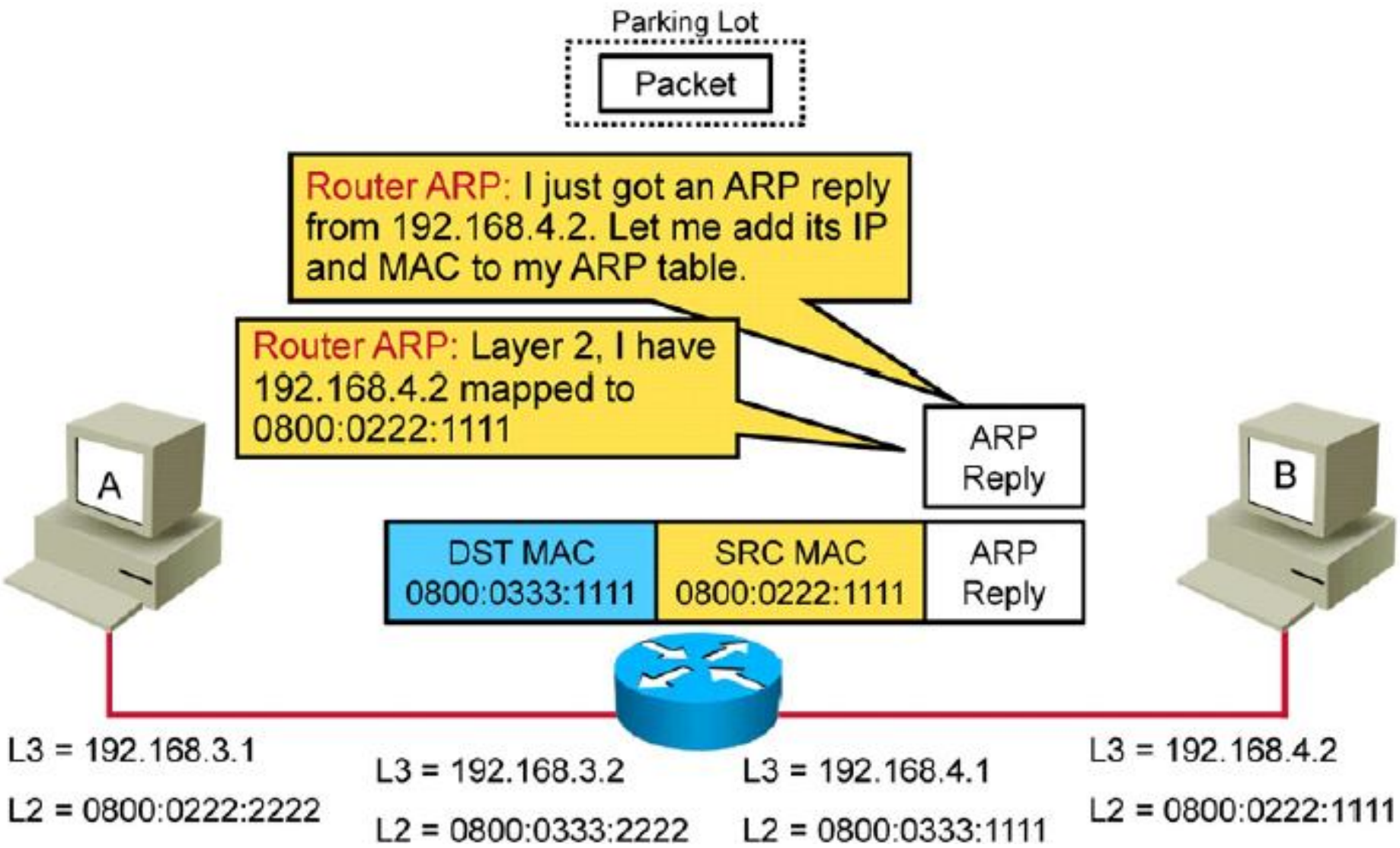
Parking Lot
Packet
Router ARP: I just got an ARP reply from 192.168.4.2. Let me add its IP and MAC to my ARP table.
Router ARP: Layer 2, I have 192.168.4.2 mapped to 0800:0222:1111
ARP Reply
A
B
DST MAC 0800:0333:1111
SRC MAC 0800:0222:1111
ARP Reply
L3 = 192.168.3.1
L2 = 0800:0222:2222
L3 = 192.168.3.2
L2 = 0800:0333:2222
L3 = 192.168.4.1
L2 = 0800:0333:1111
L3 = 192.168.4.2
L2 = 0800:0222:1111

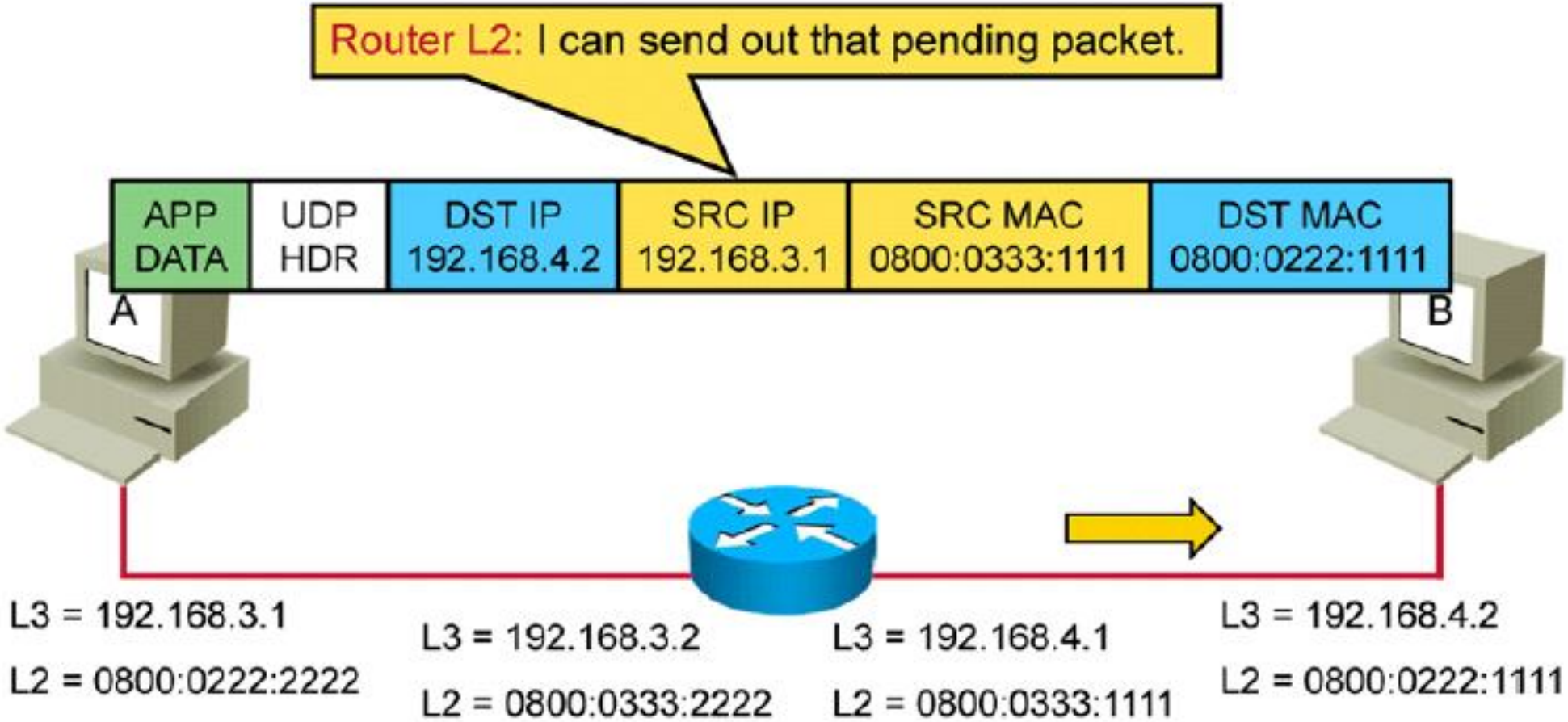
Router L2: I can send out that pending packet.
APP DATA
UDP HDR
DST IP 192.168.4.2
SRC IP 192.168.3.1
SRC MAC 0800:0333:1111
DST MAC 0800:0222:1111
A
B
L3 = 192.168.3.1
L2 = 0800:0222:2222
L3 = 192.168.3.2
L2 = 0800:0333:2222
L3 = 192.168.4.1
L2 = 0800:0333:1111
L3 = 192.168.4.2
L2 = 0800:0222:1111