TCP Traffic Flow

Host-to-Host Packet Delivery (1 of 22)

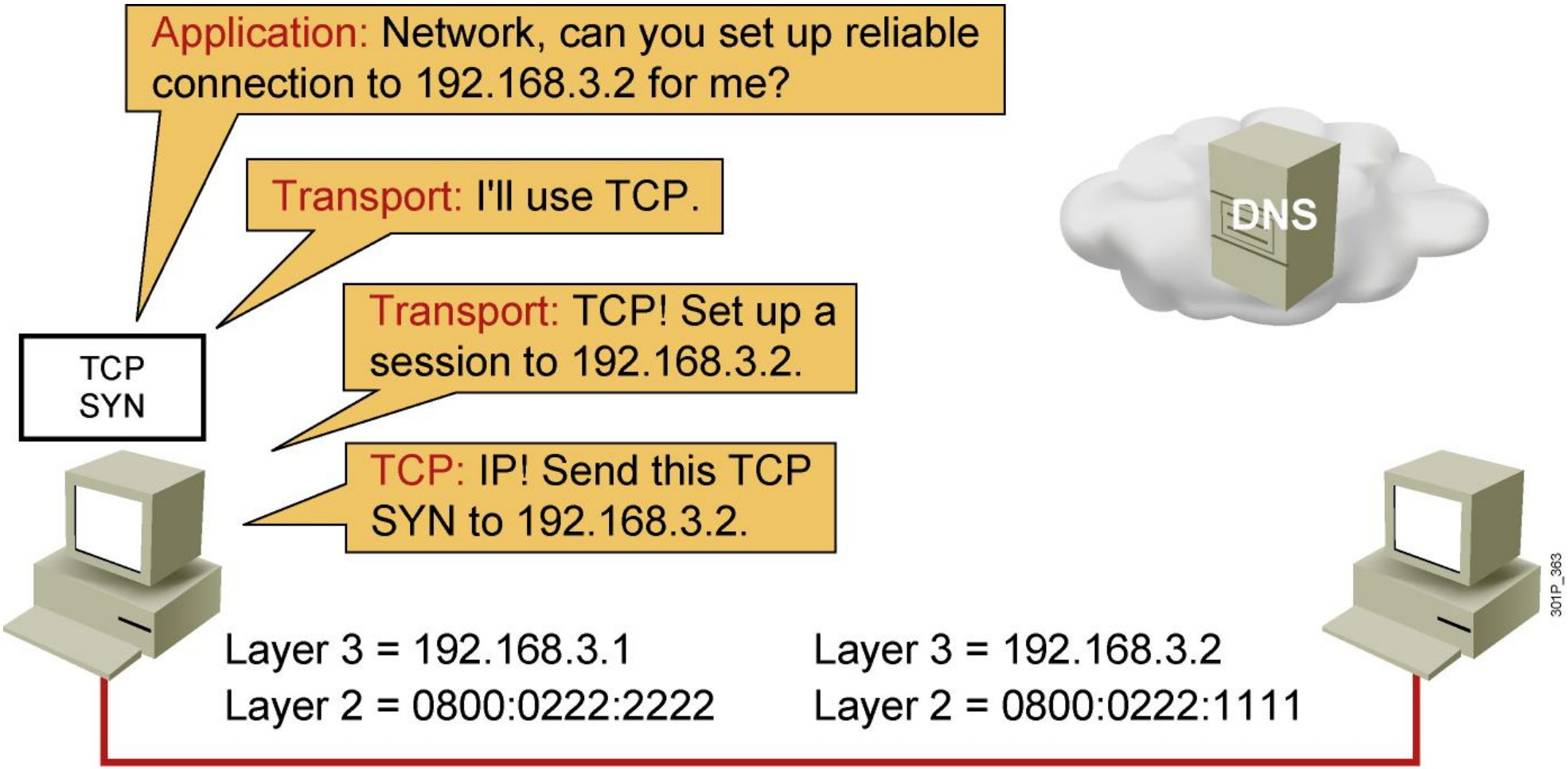

Host-to-Host Packet Delivery (2 of 22)

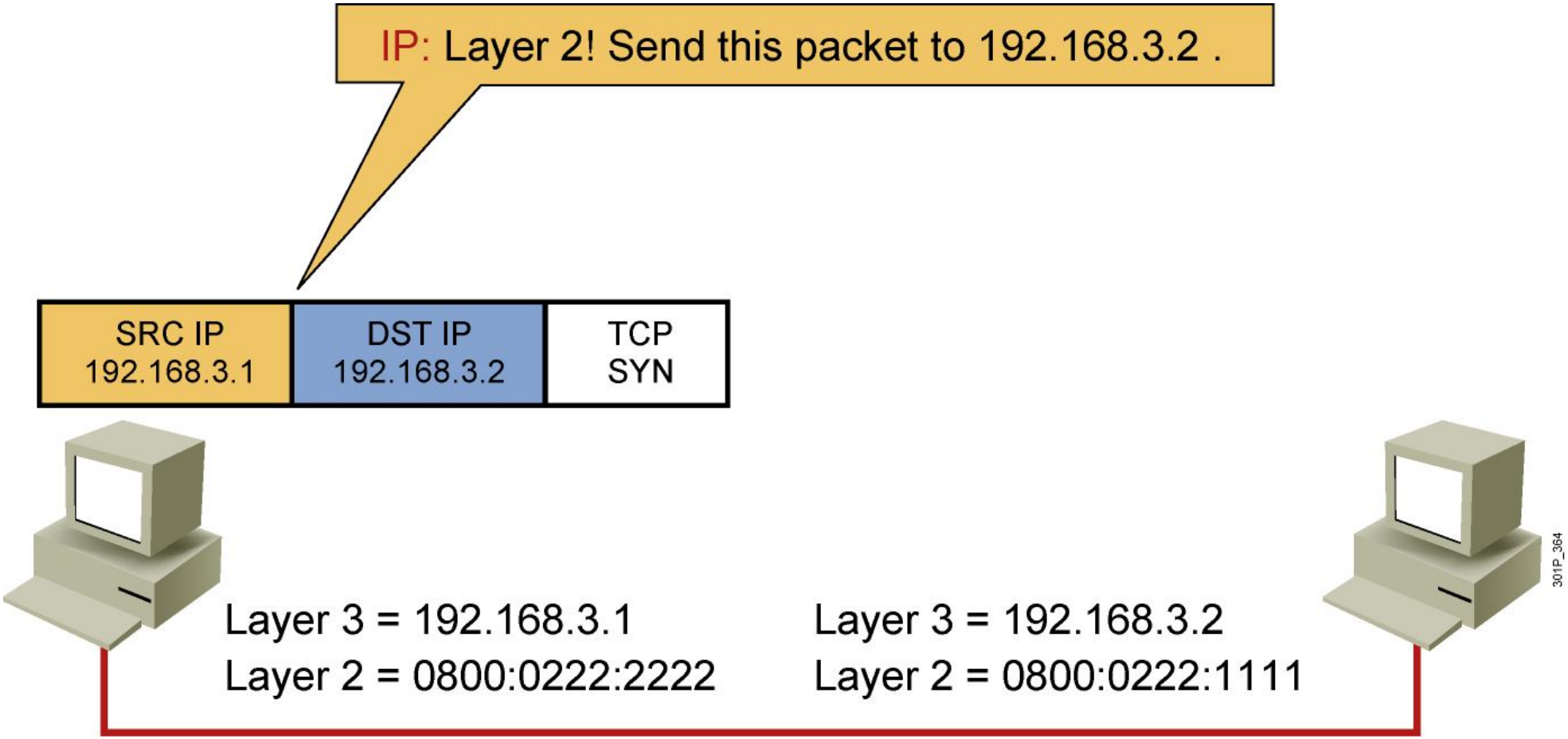

Host-to-Host Packet Delivery (3 of 22)

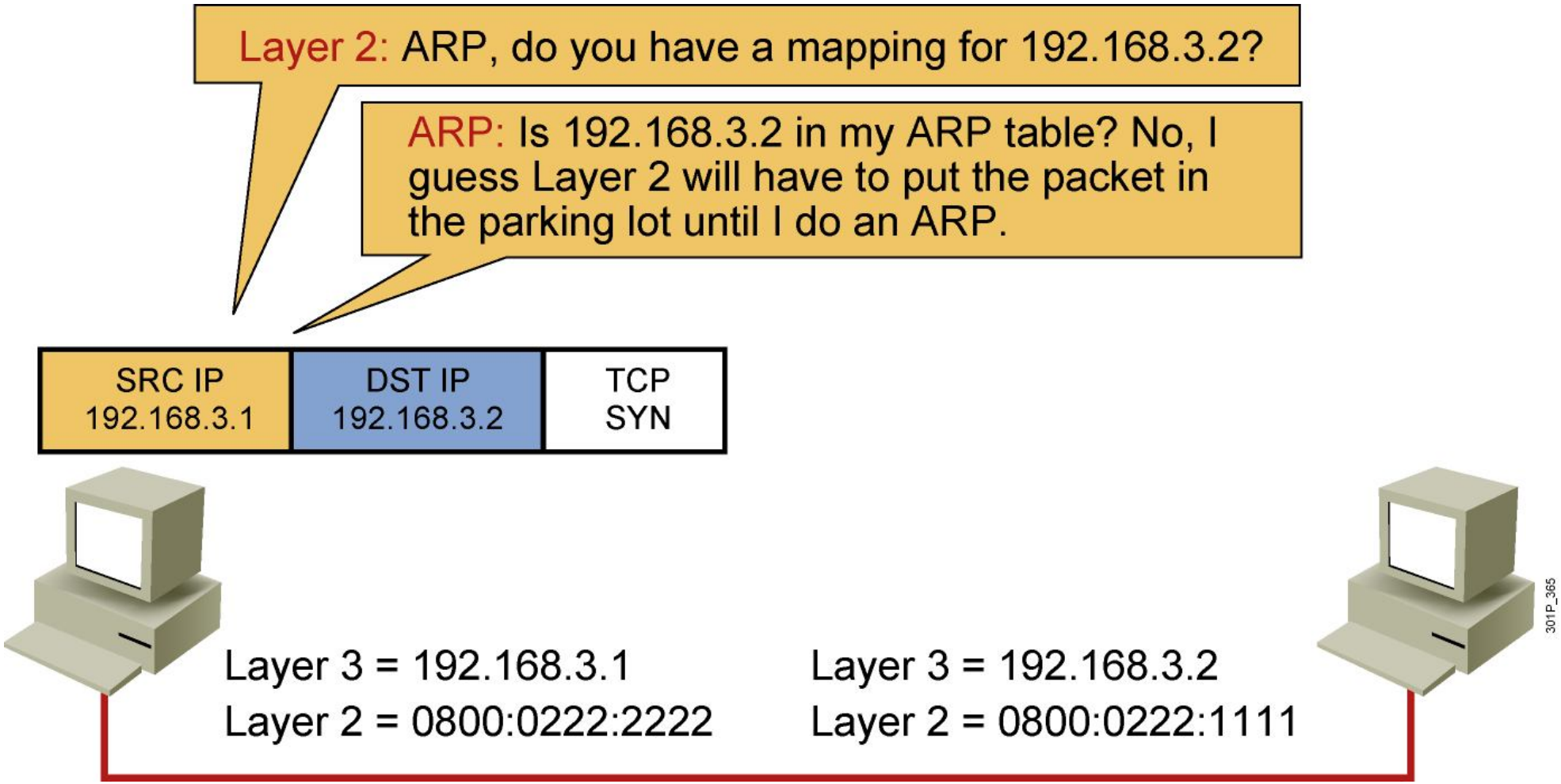

Host-to-Host Packet Delivery (4 of 22)

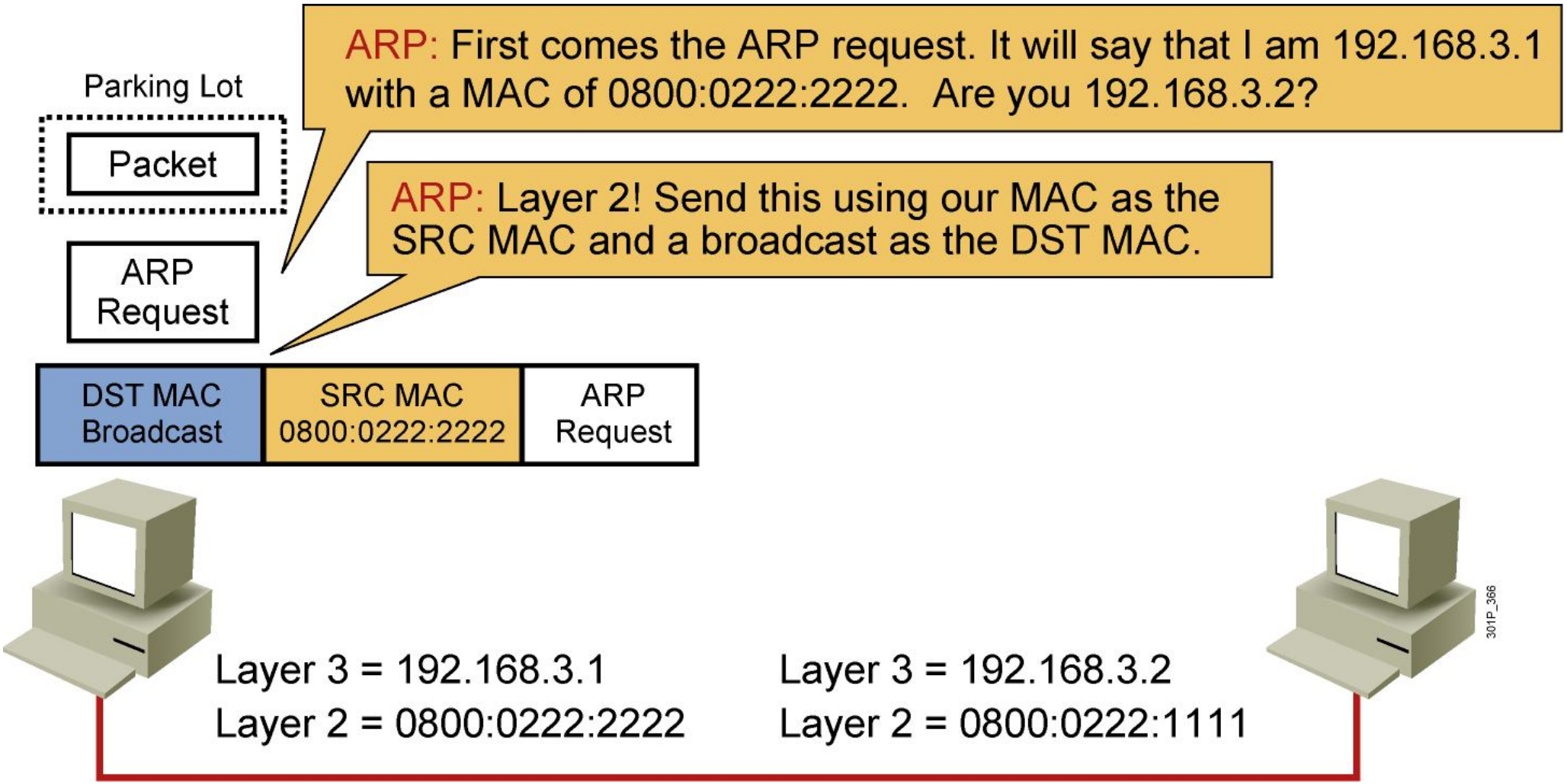

Host-to-Host Packet Delivery (5 of 22)

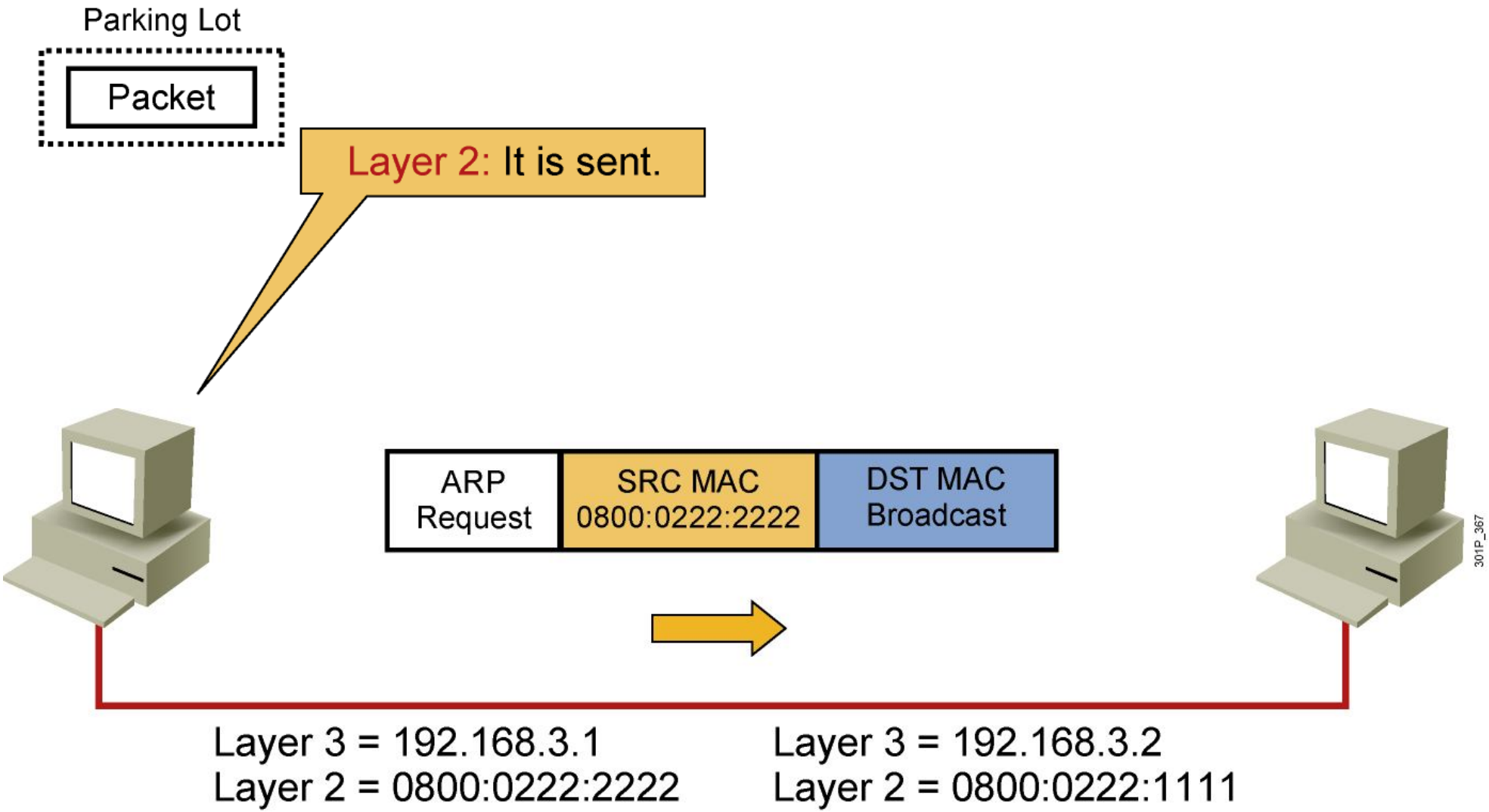

Host-to-Host Packet Delivery (6 of 22)

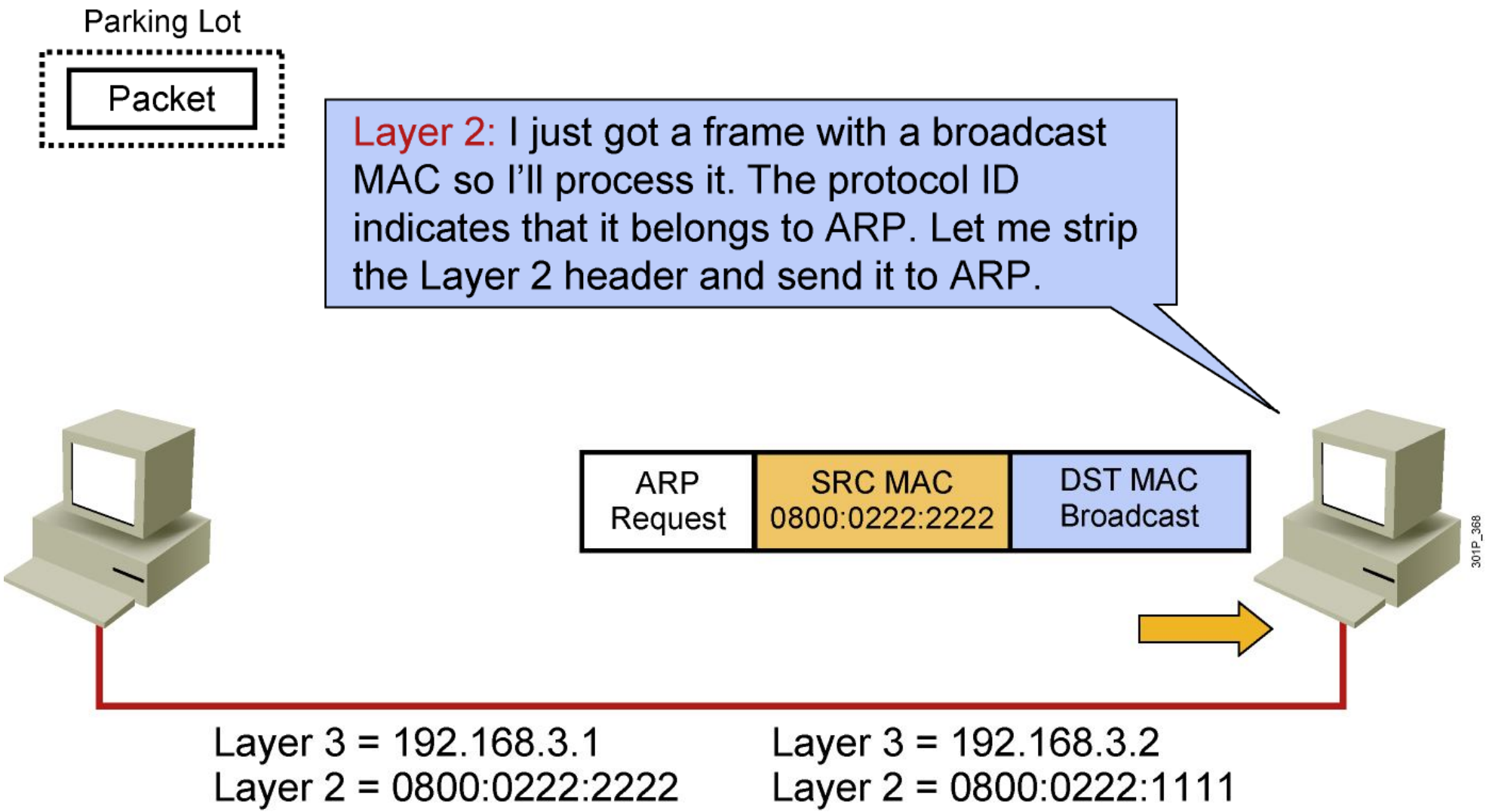

Host-to-Host Packet Delivery (7 of 22)

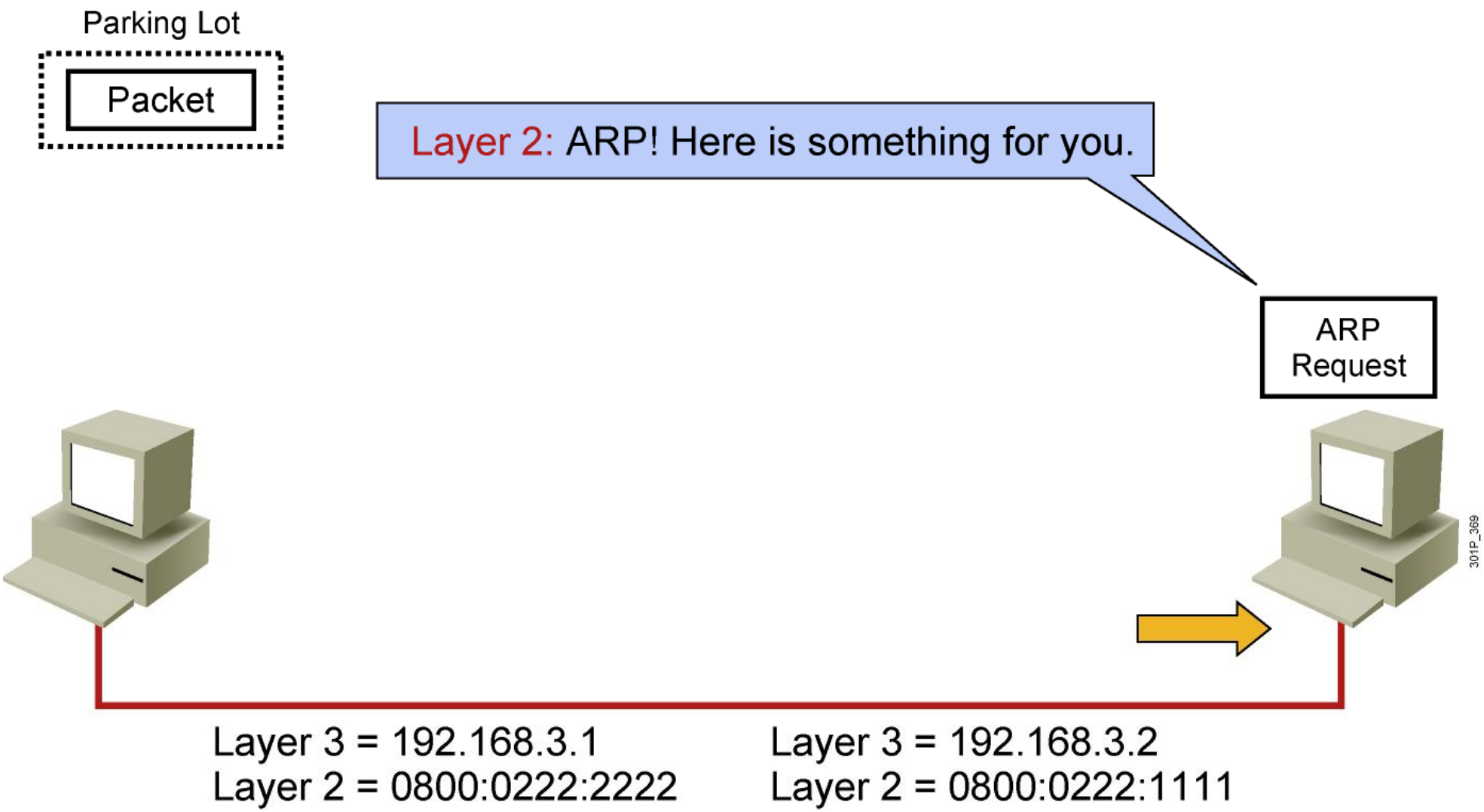

Host-to-Host Packet Delivery (8 of 22)

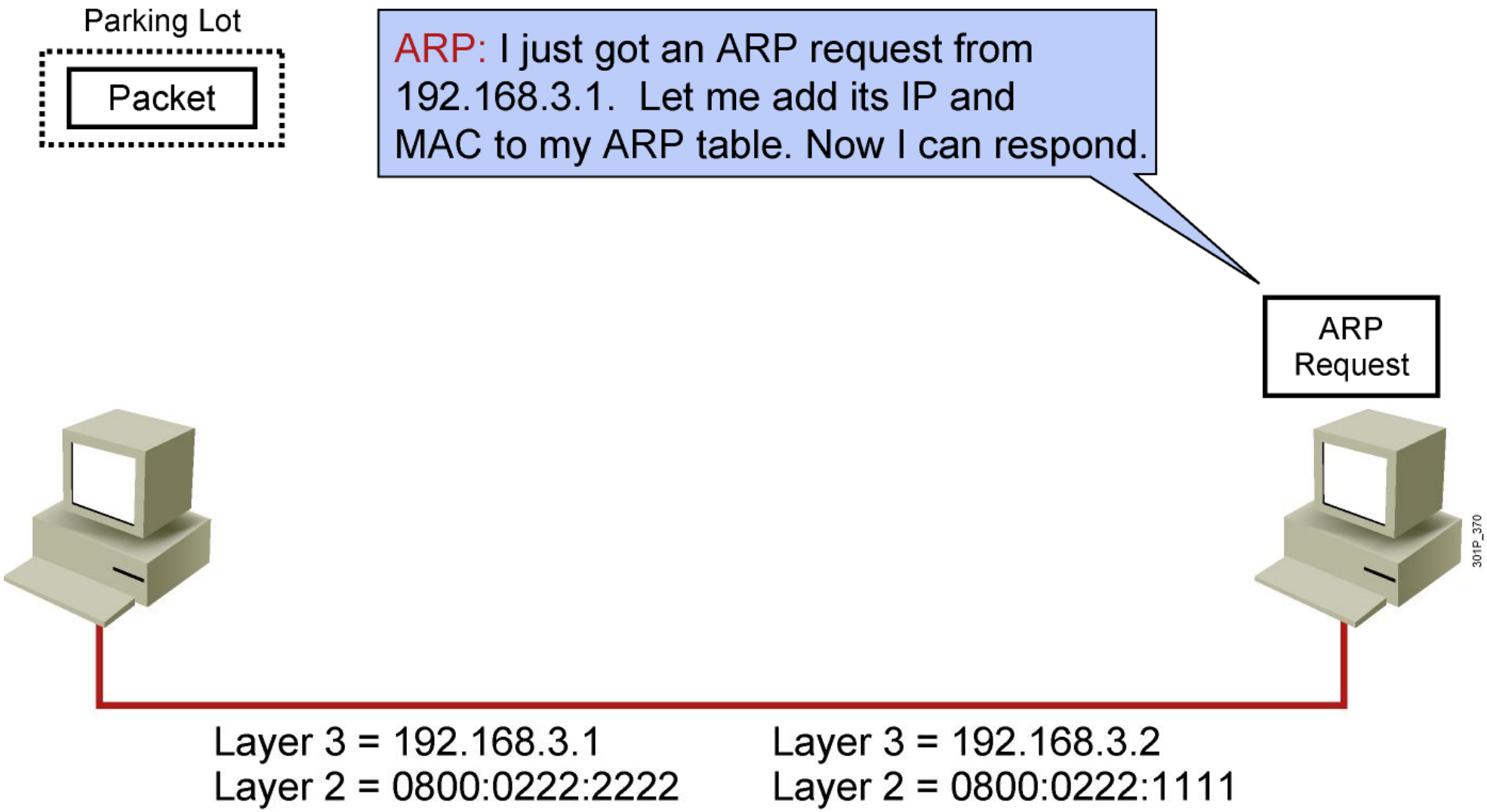

Host-to-Host Packet Delivery (9 of 22)

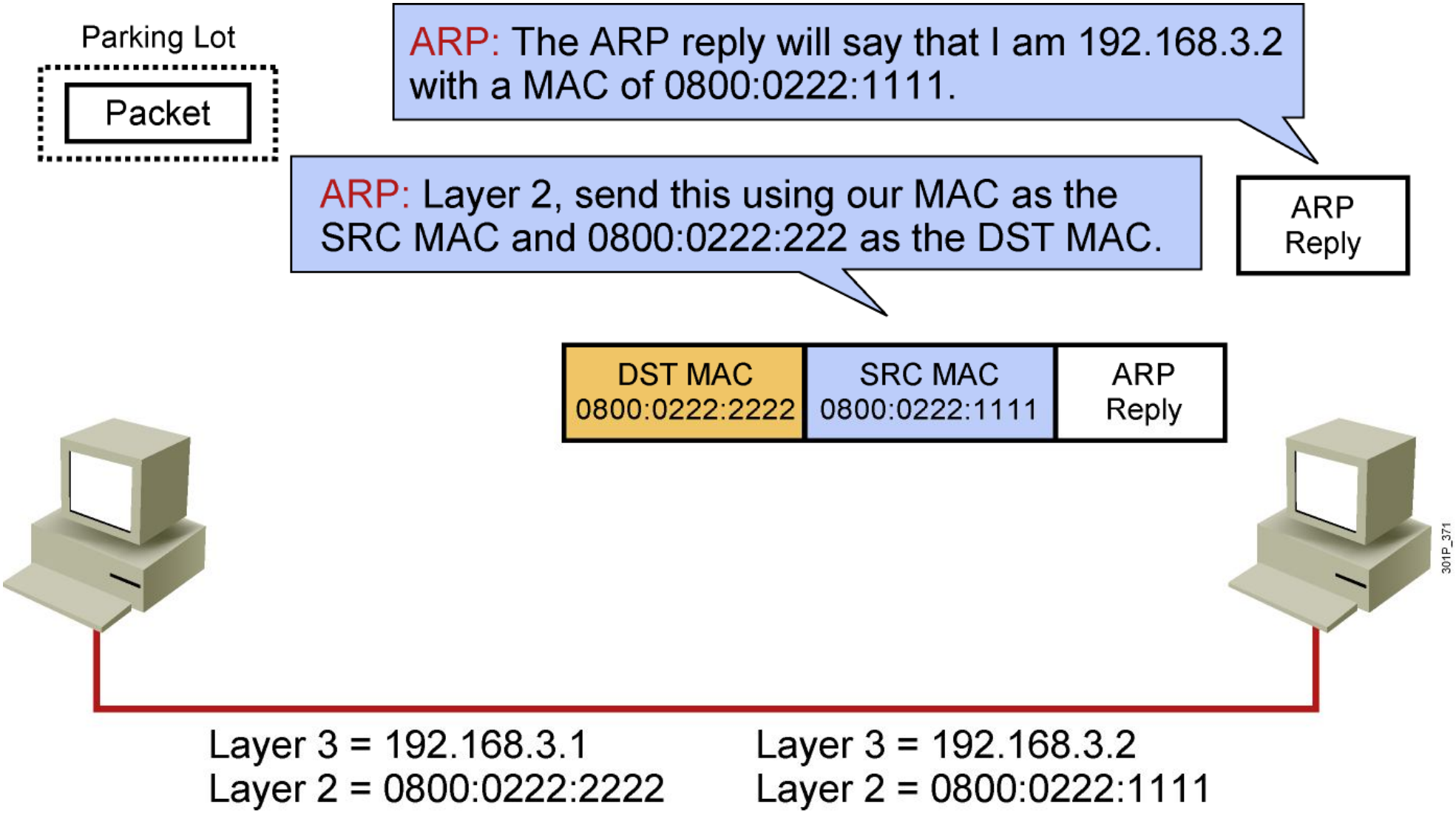

Host-to-Host Packet Delivery (10 of 22)

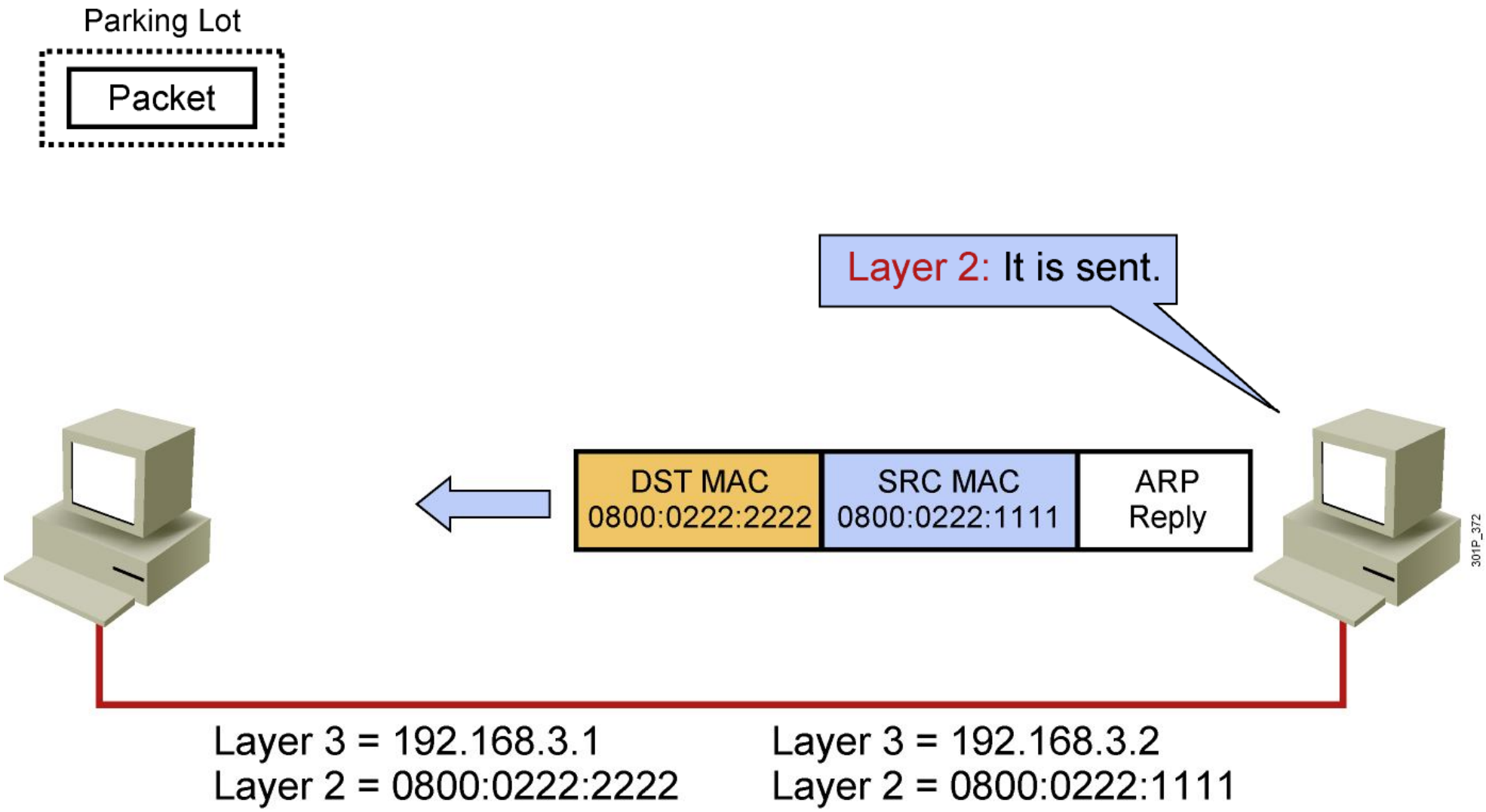

Host-to-Host Packet Delivery (11 of 22)

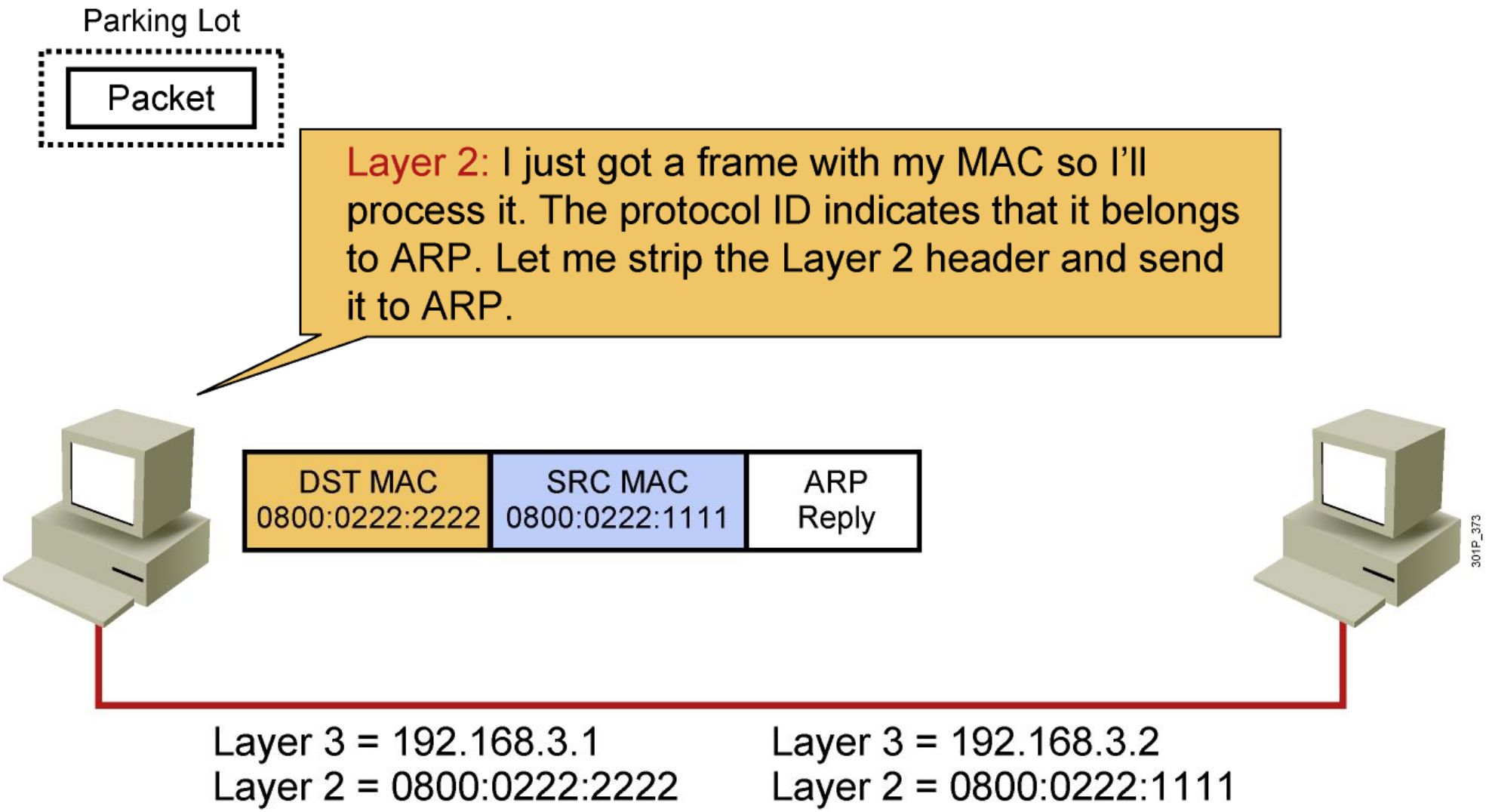

Host-to-Host Packet Delivery (12 of 22)

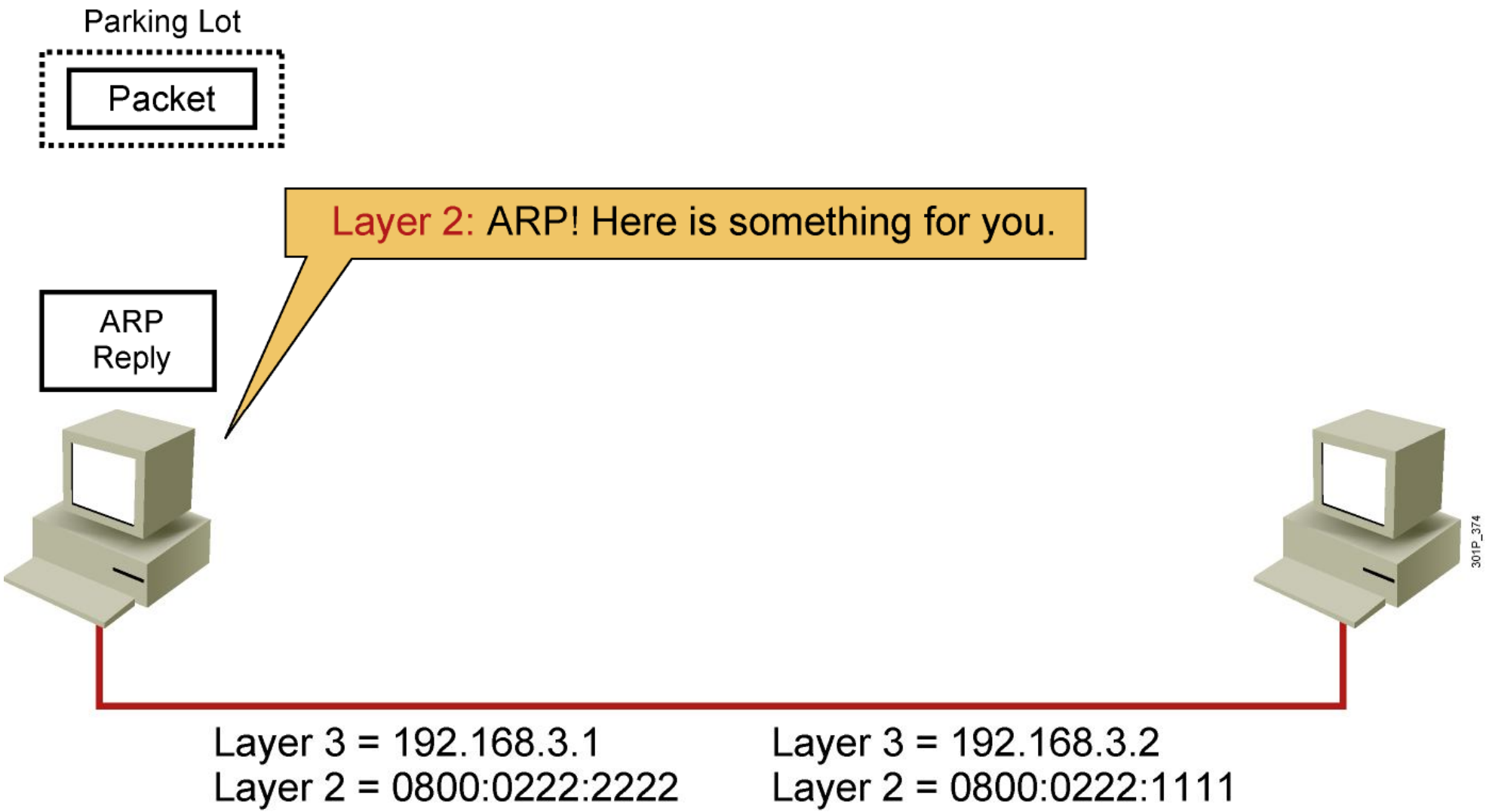

Host-to-Host Packet Delivery (13 of 22)

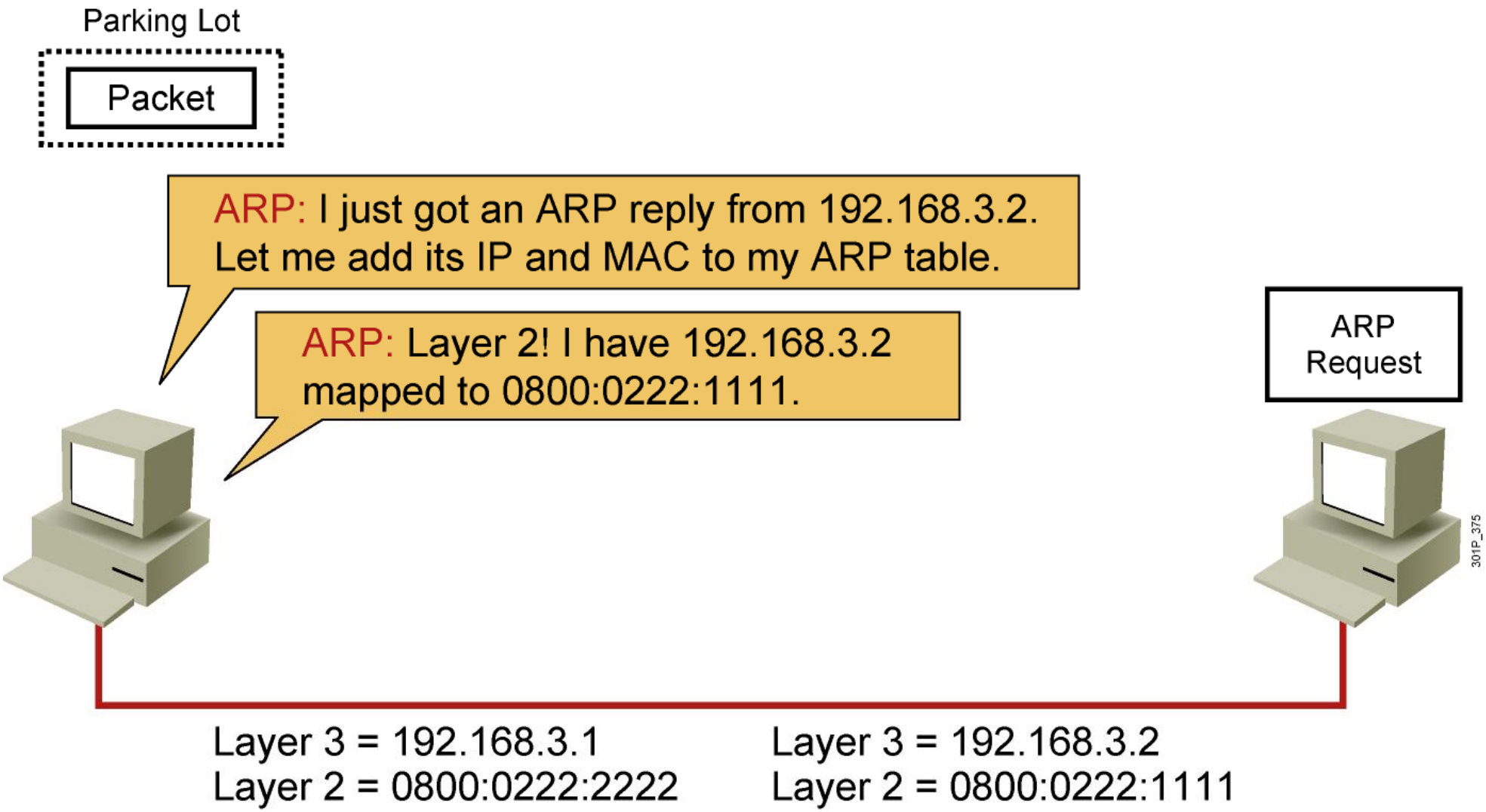

Host-to-Host Packet Delivery (14 of 22)

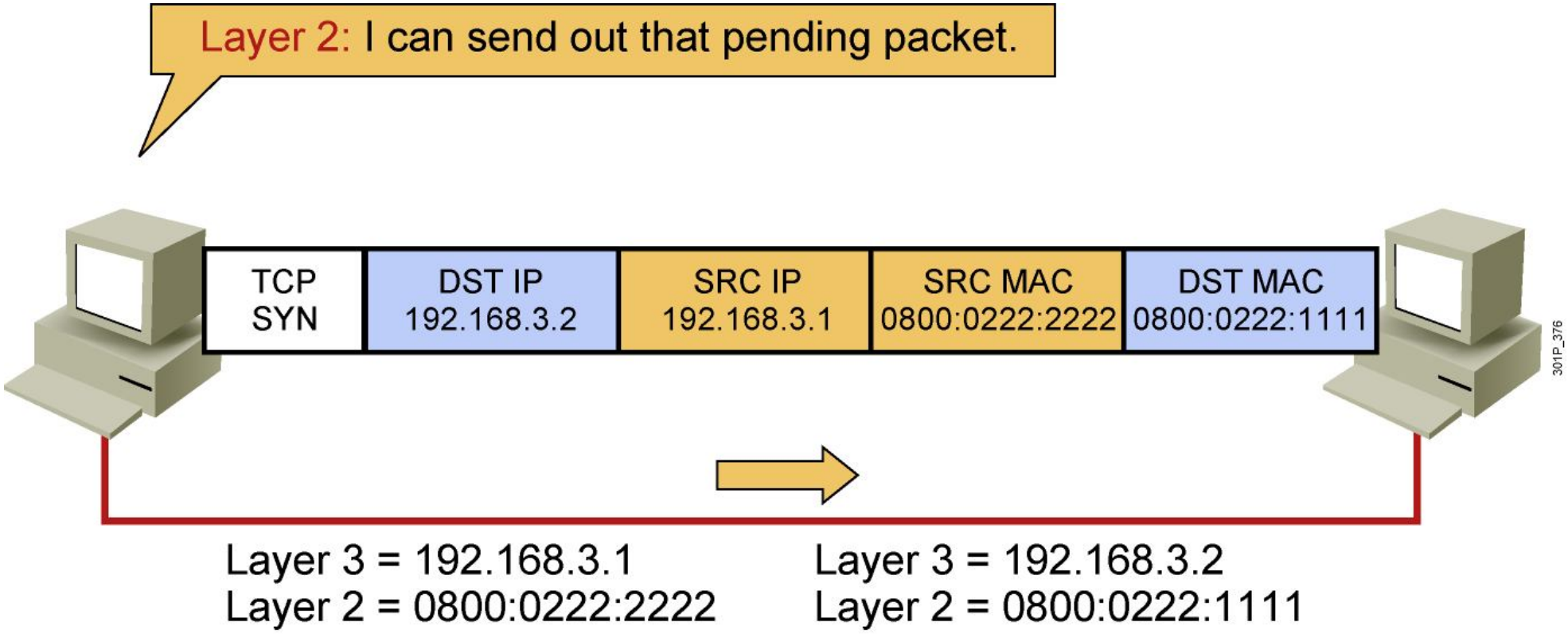

Host-to-Host Packet Delivery (15 of 22)

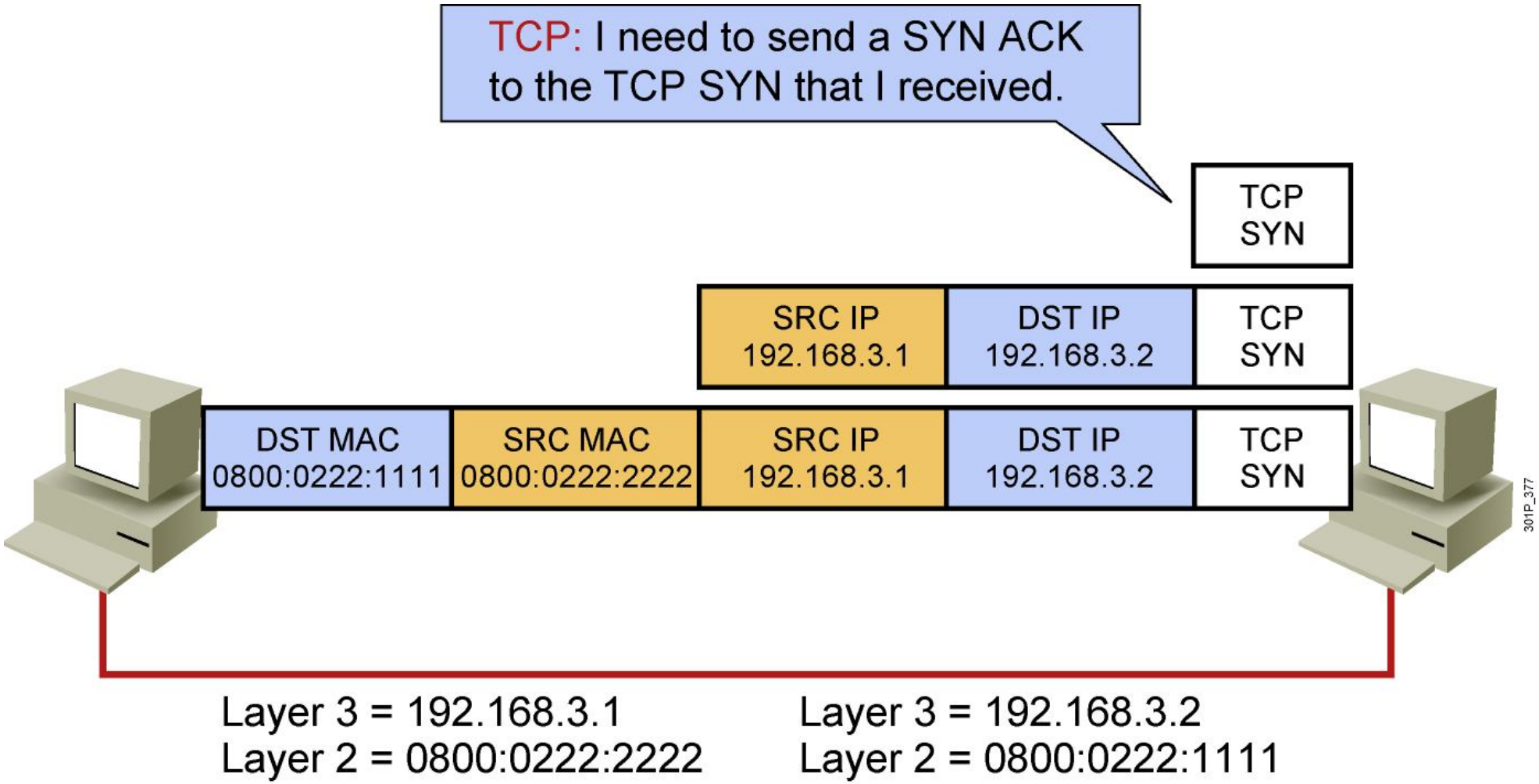

Host-to-Host Packet Delivery (16 of 22)

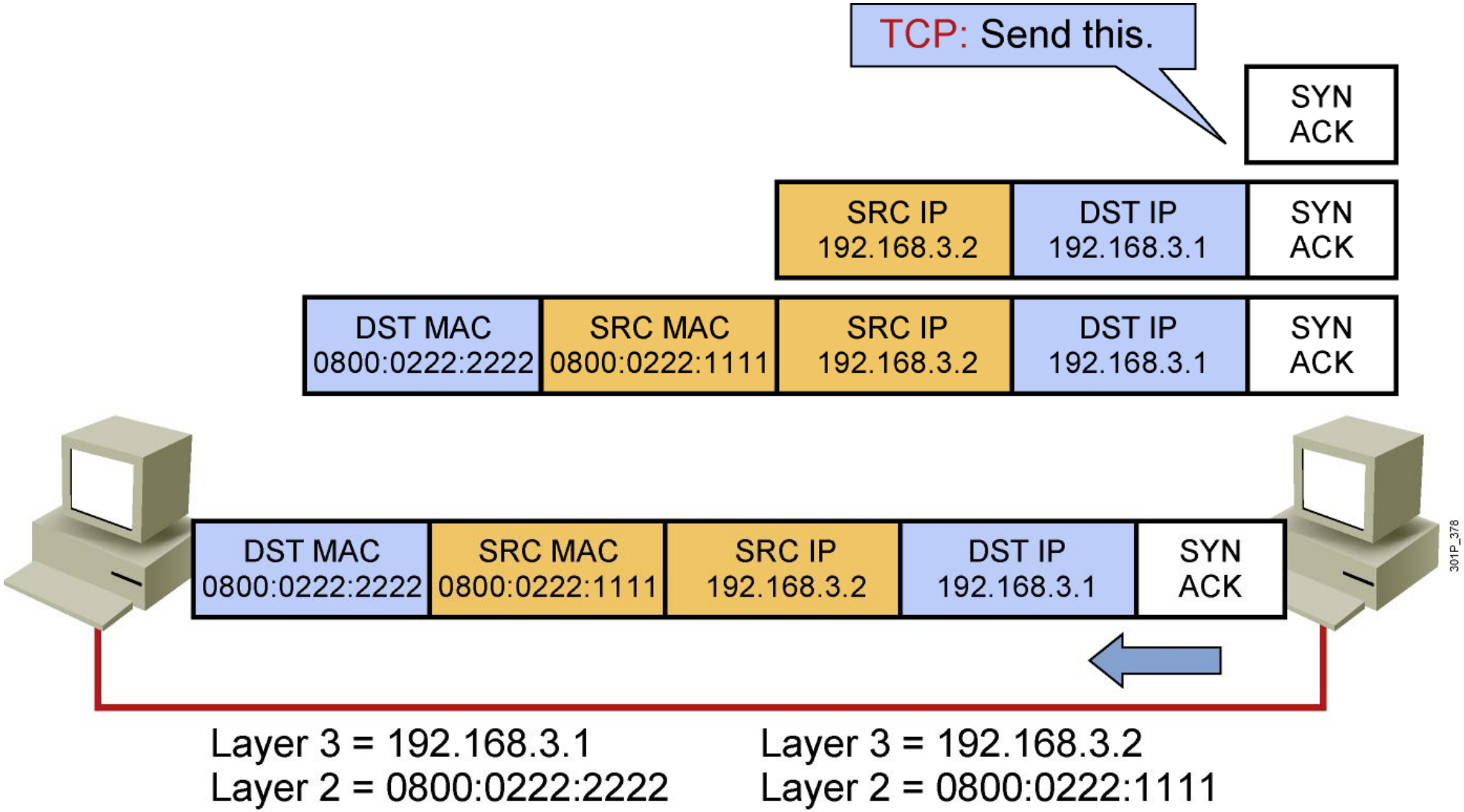

Host-to-Host Packet Delivery (17 of 22)

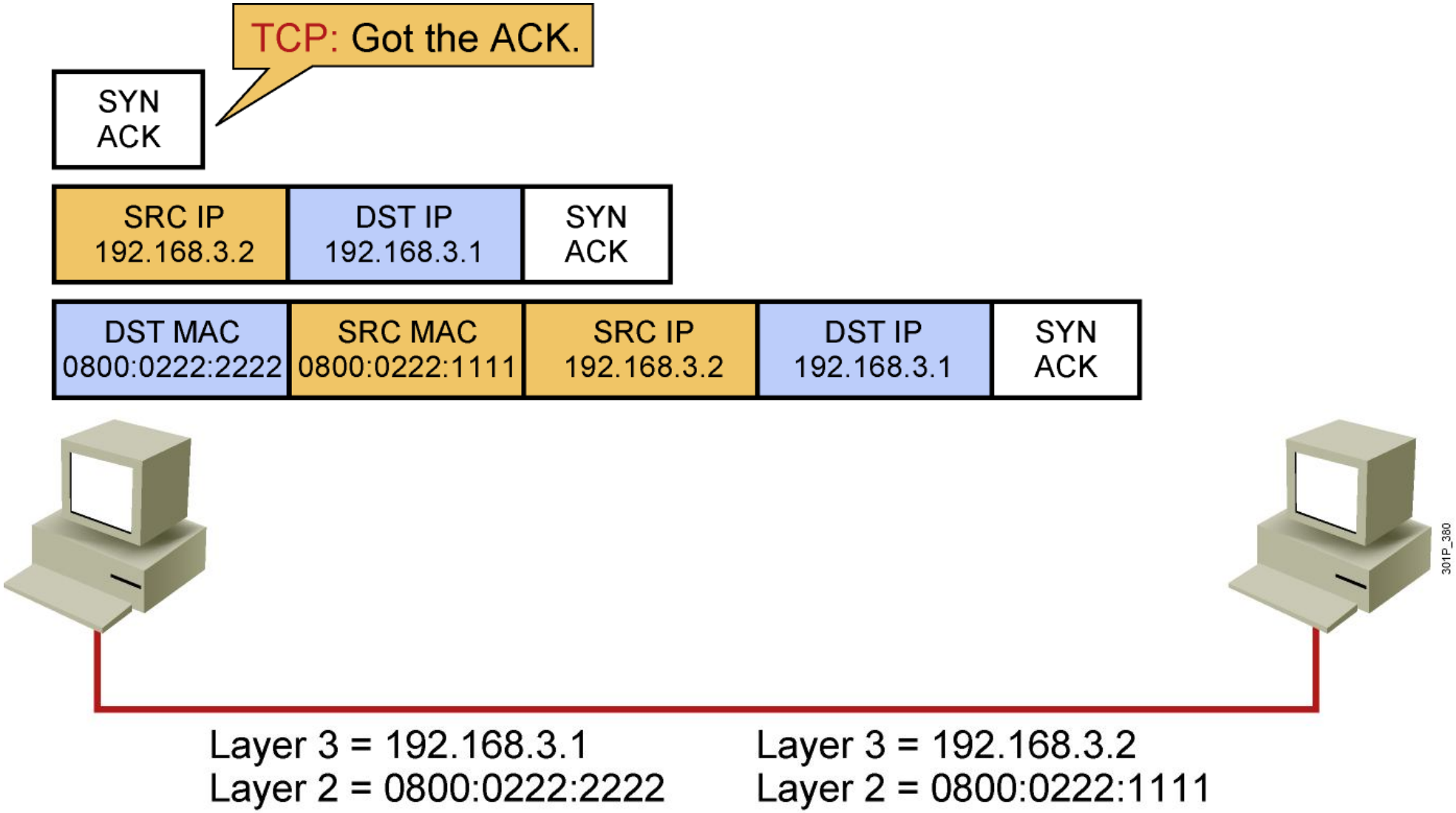

Host-to-Host Packet Delivery (18 of 22)

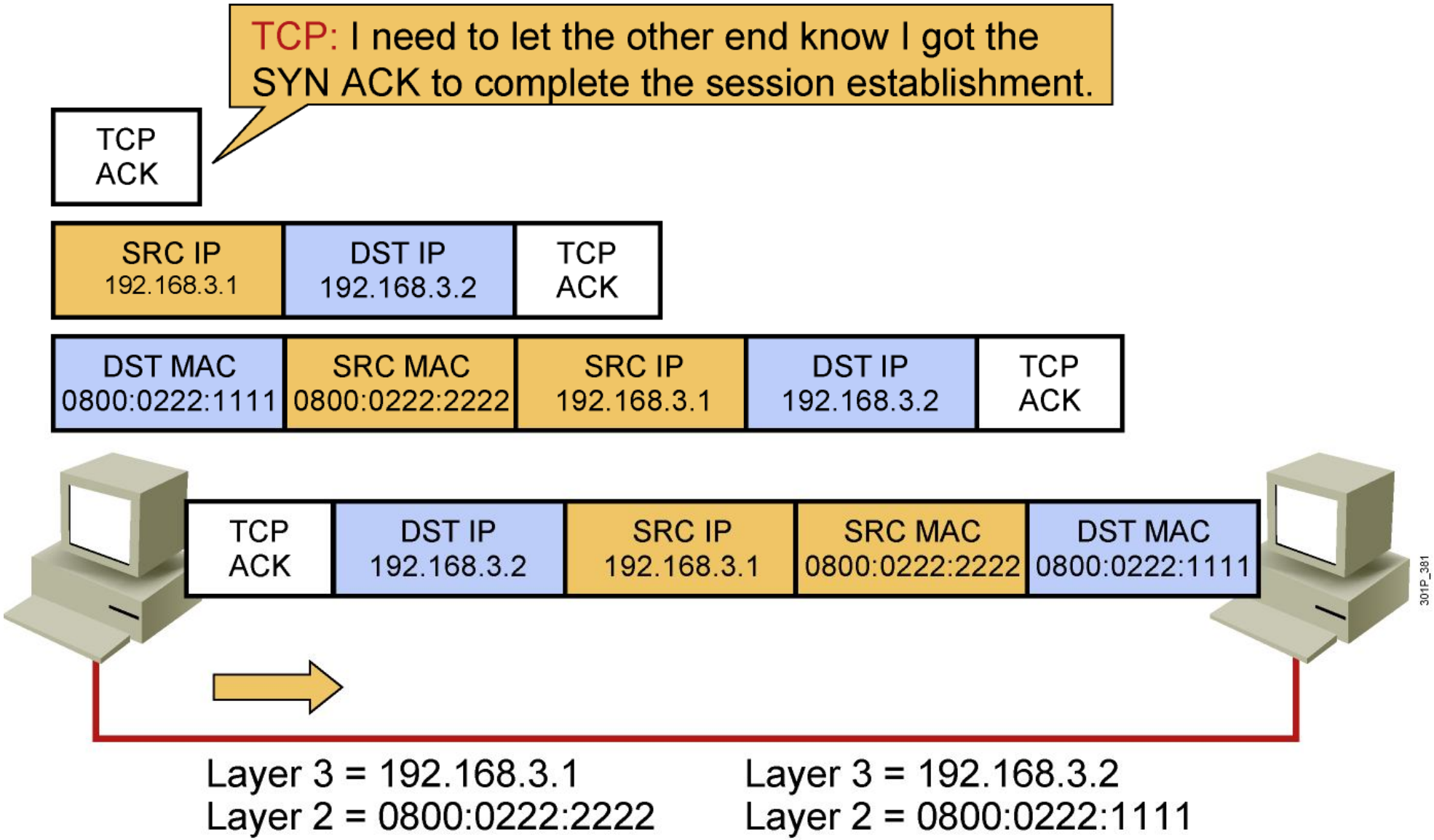

Host-to-Host Packet Delivery (19 of 22)

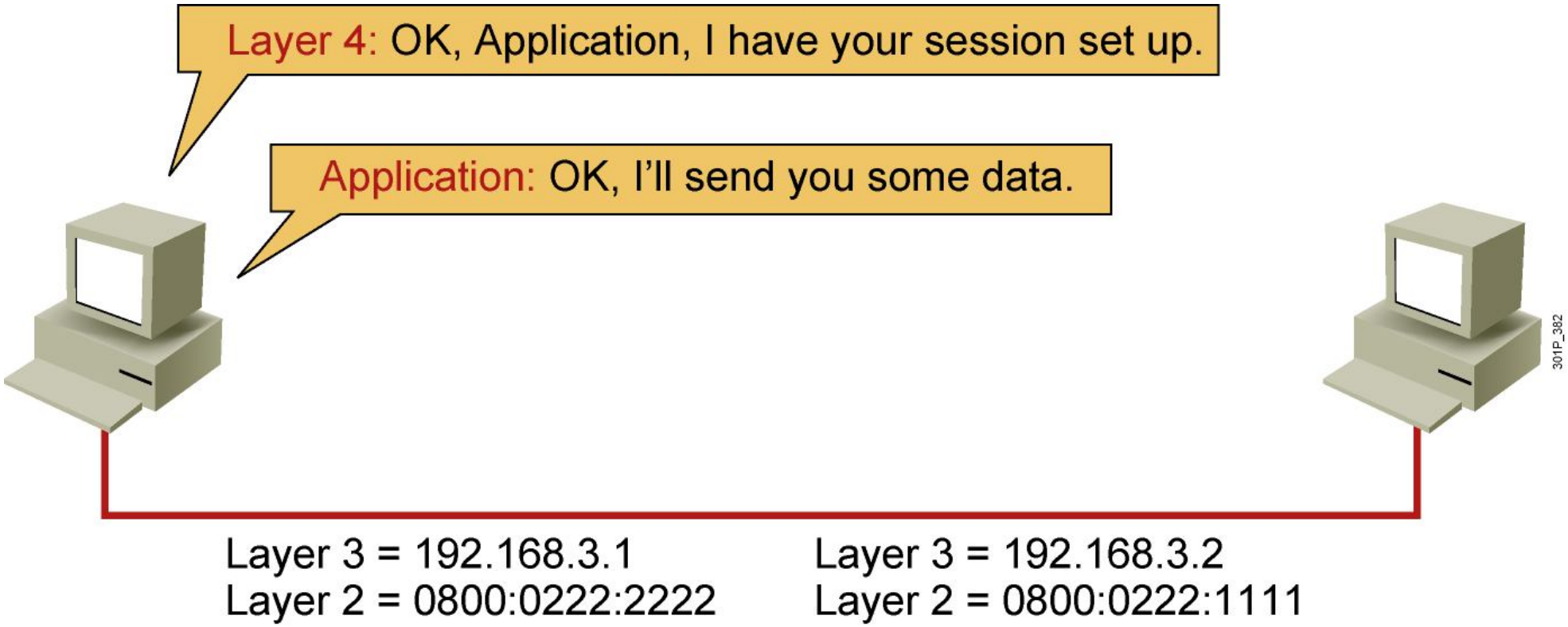

Host-to-Host Packet Delivery (20 of 22)

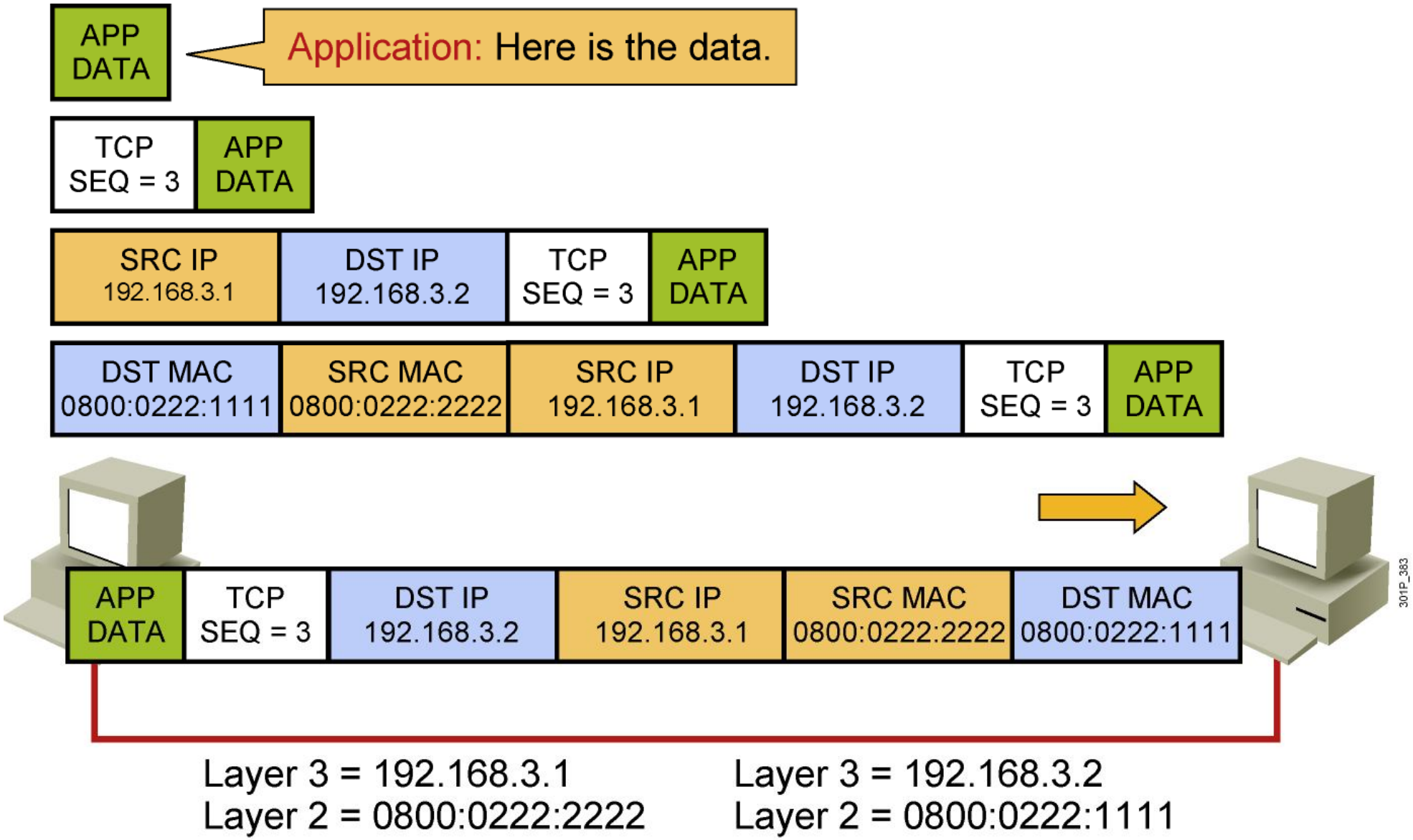

Host-to-Host Packet Delivery (21 of 22)

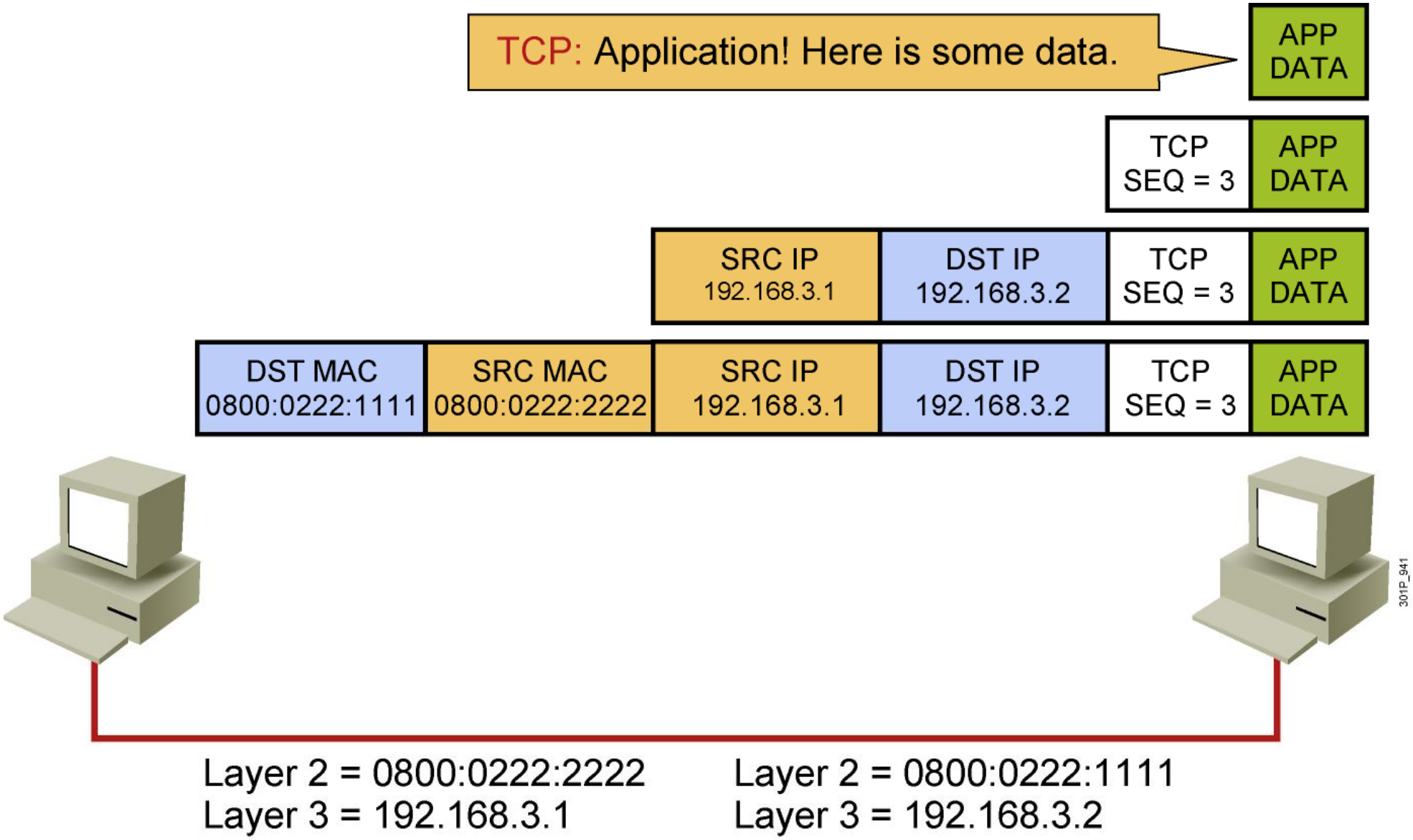

Host-to-Host Packet Delivery (22 of 22)

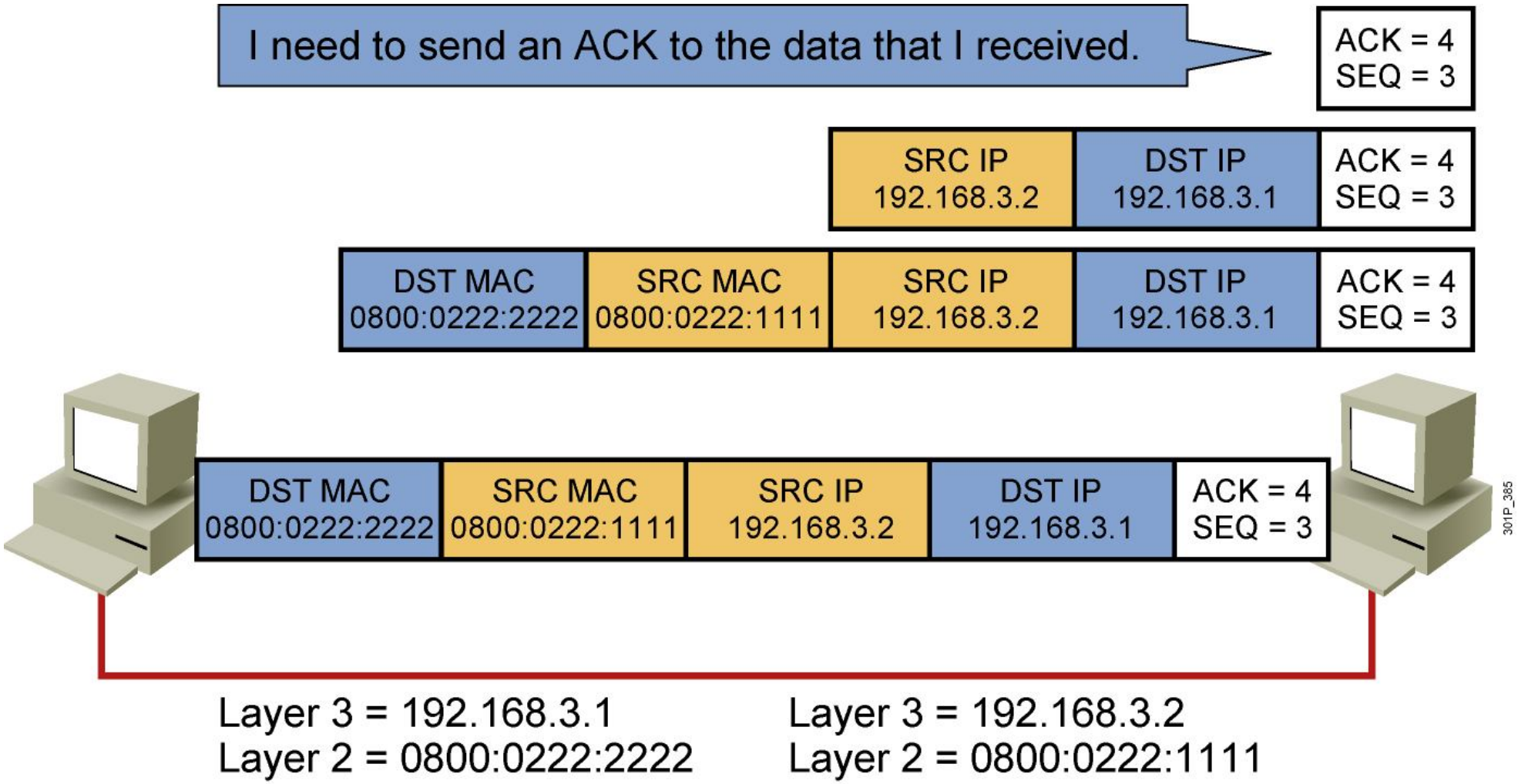

UDP Traffic Flow

Host-to-Host Packet Delivery (1 of 19)

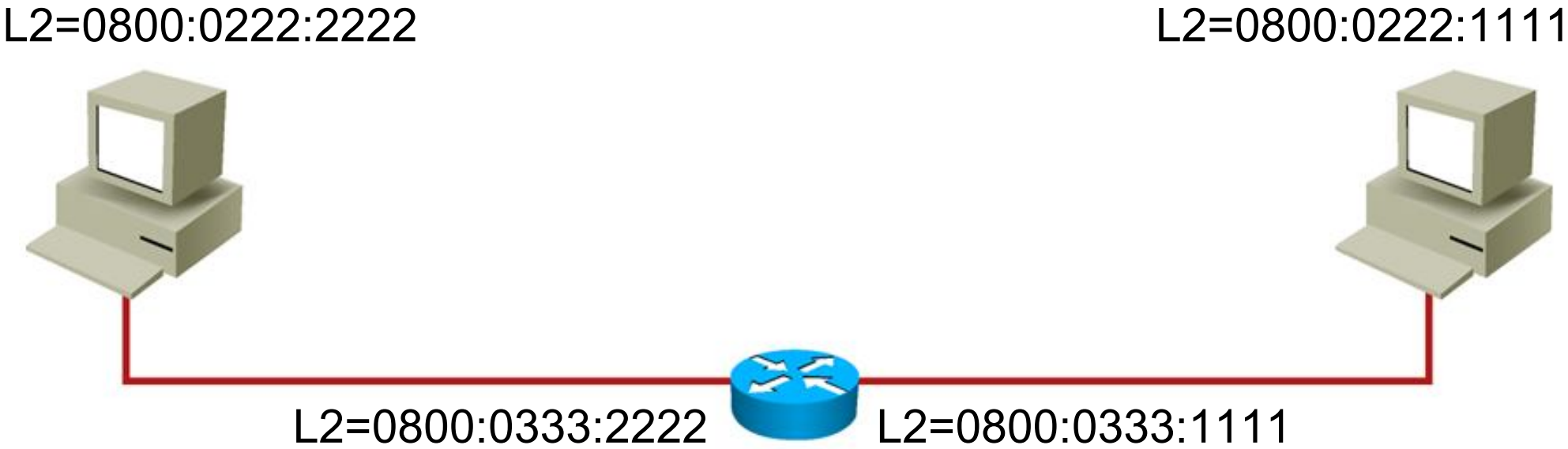

Host-to-Host Packet Delivery (2 of 19)

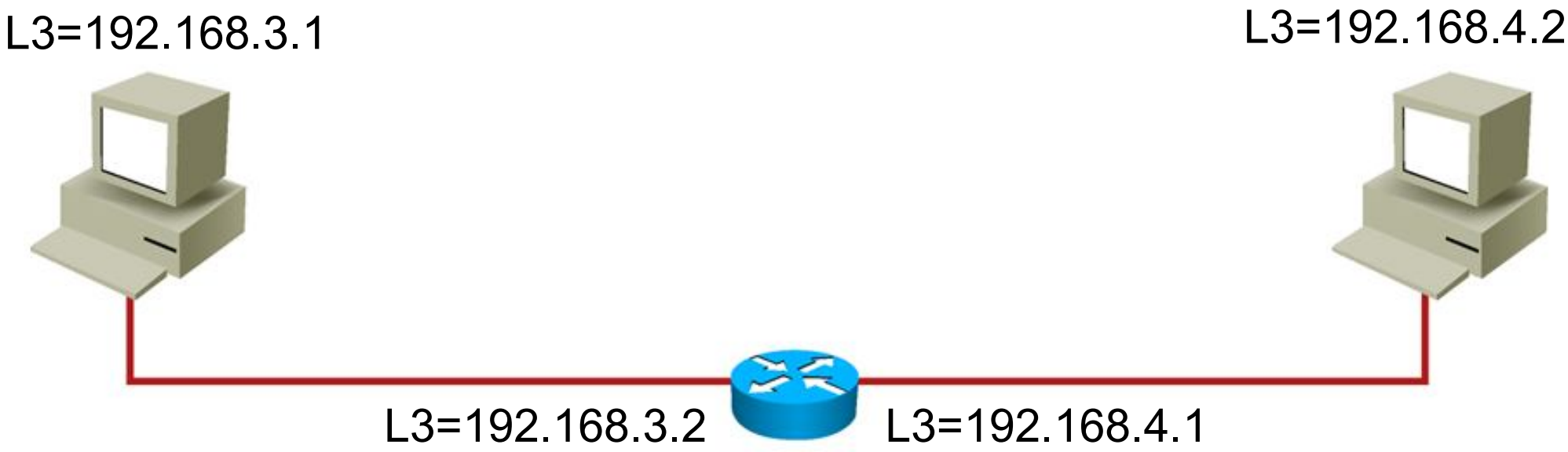

Host-to-Host Packet Delivery (3 of 19)

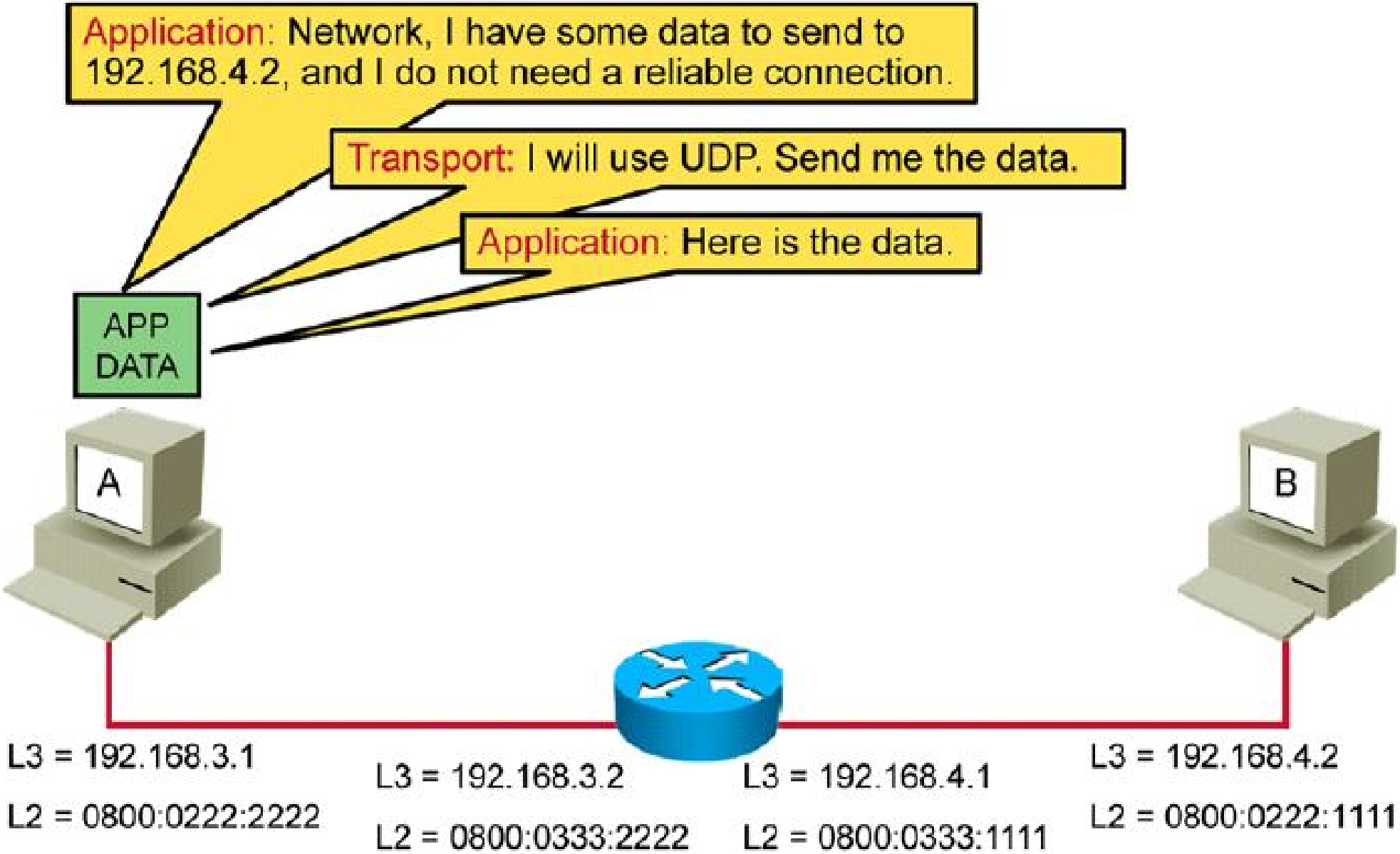

Host-to-Host Packet Delivery (4 of 19)

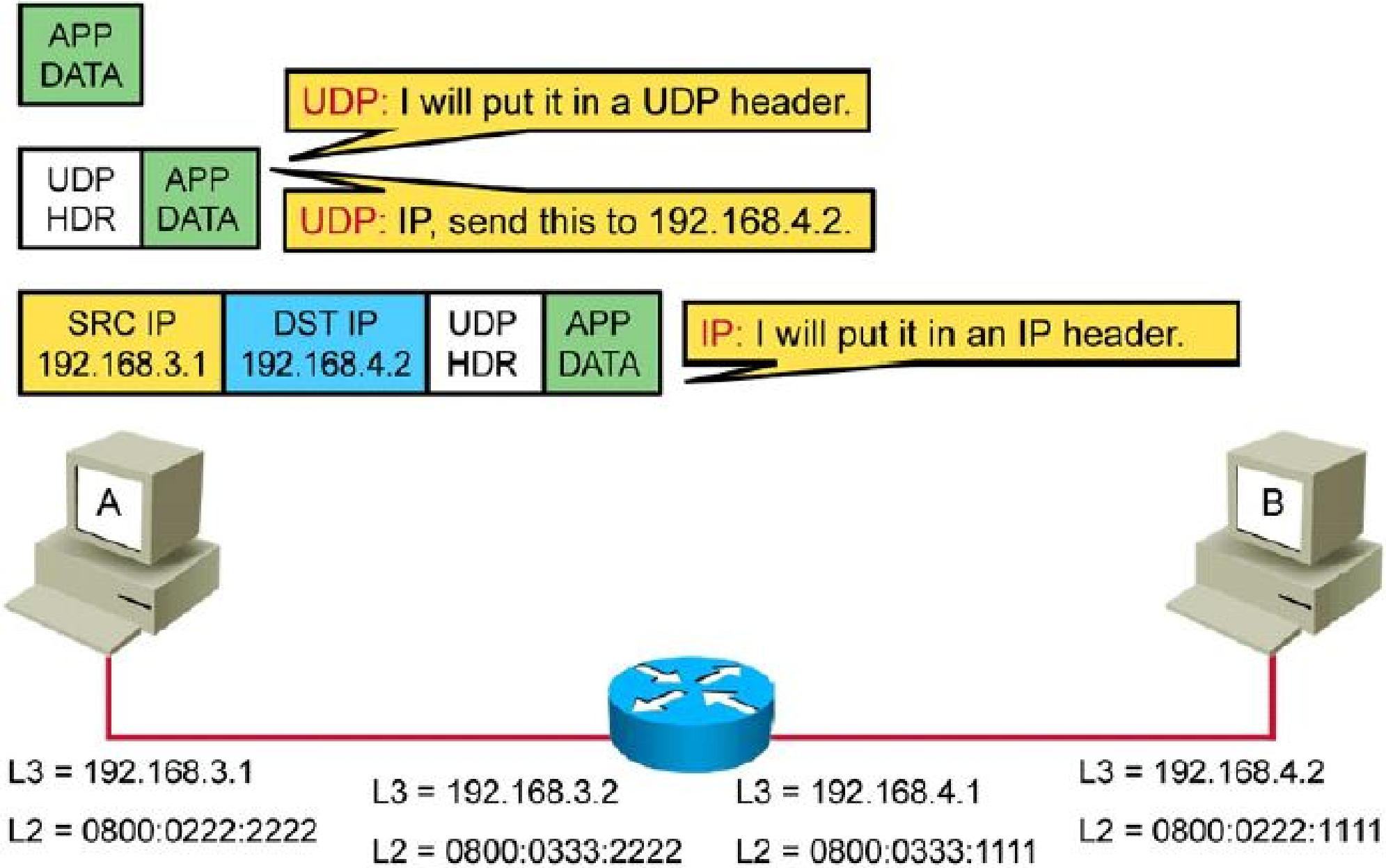

Host-to-Host Packet Delivery (5 of 19)

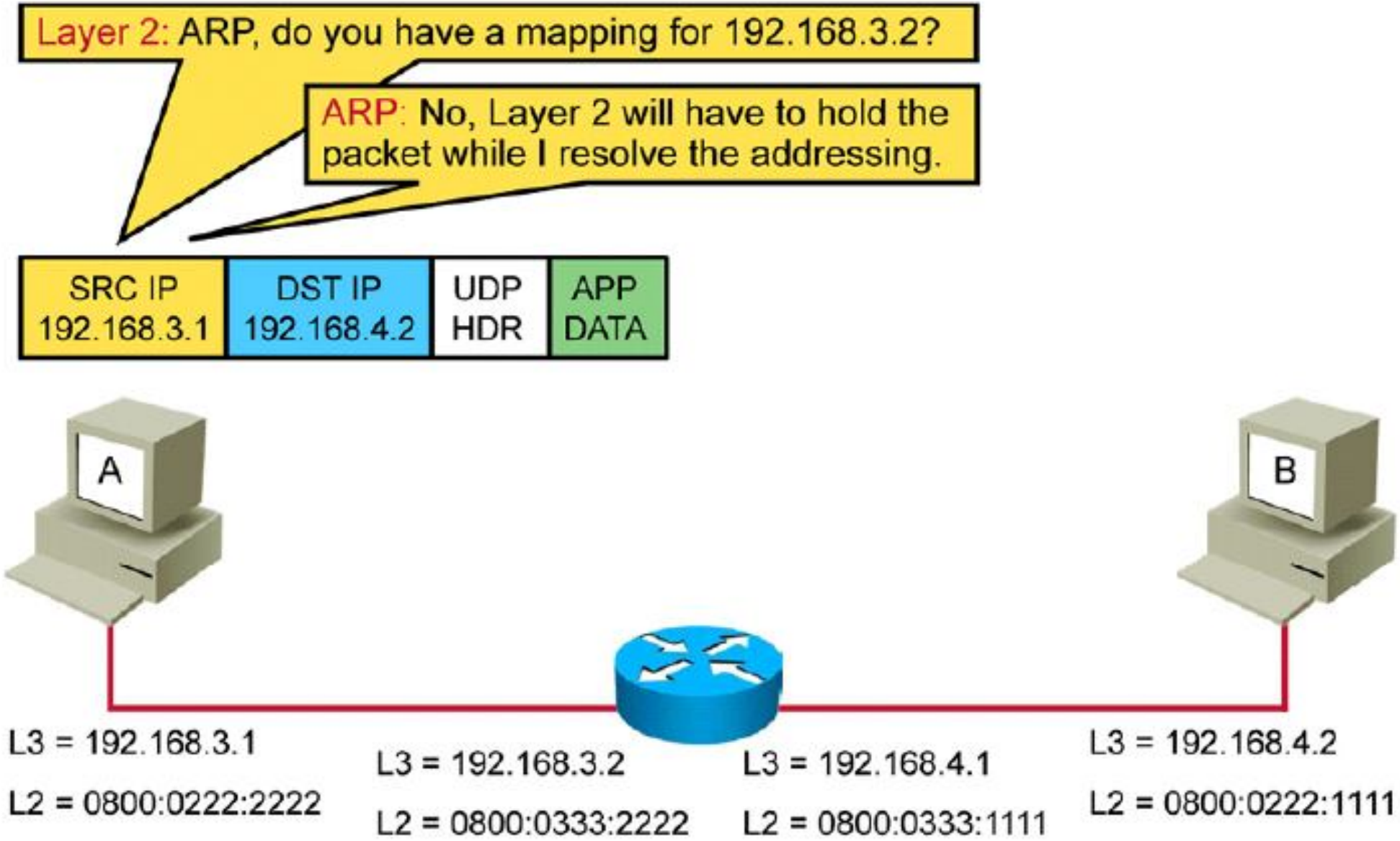

Host-to-Host Packet Delivery (6 of 19)

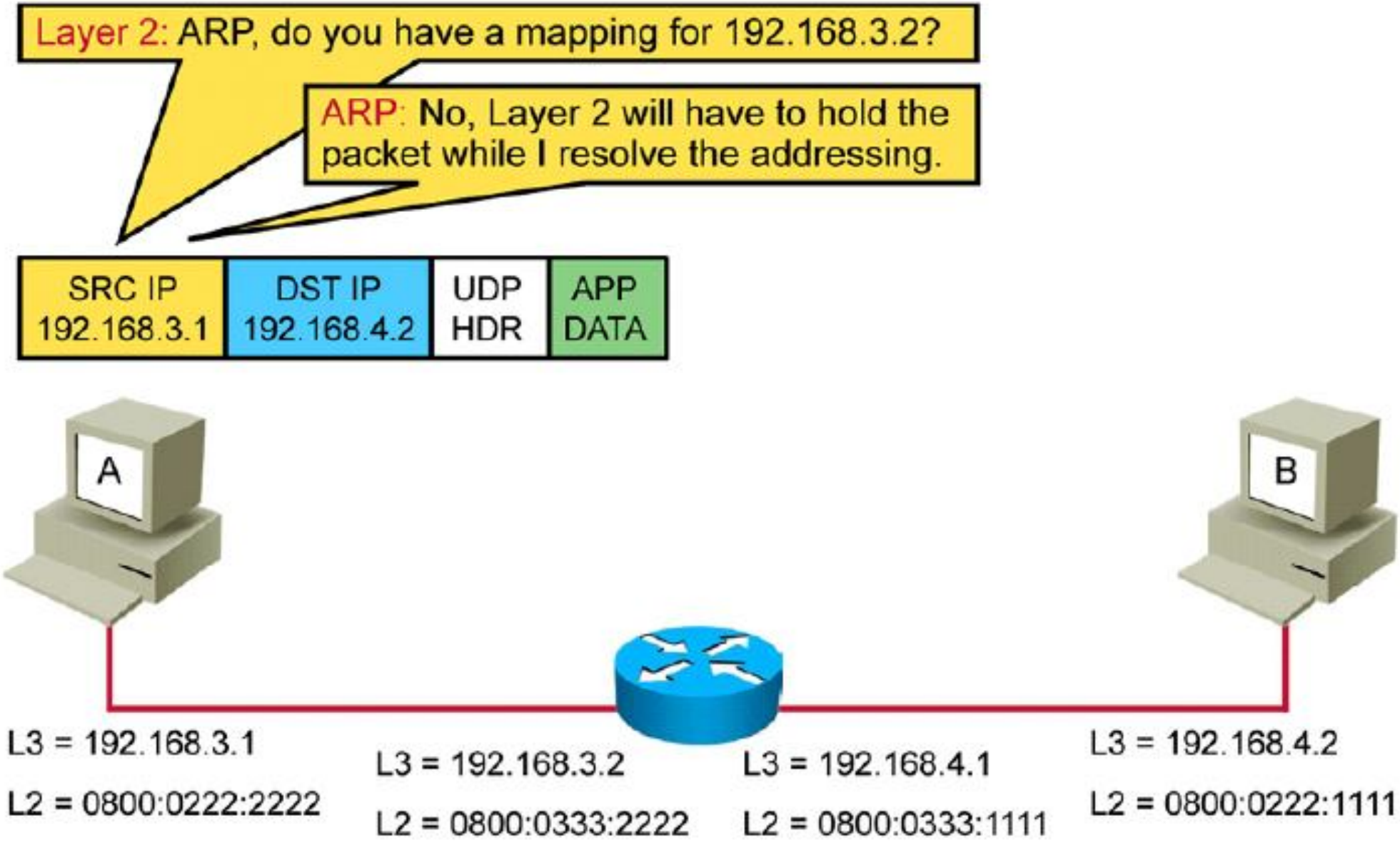

Host-to-Host Packet Delivery (7 of 19)

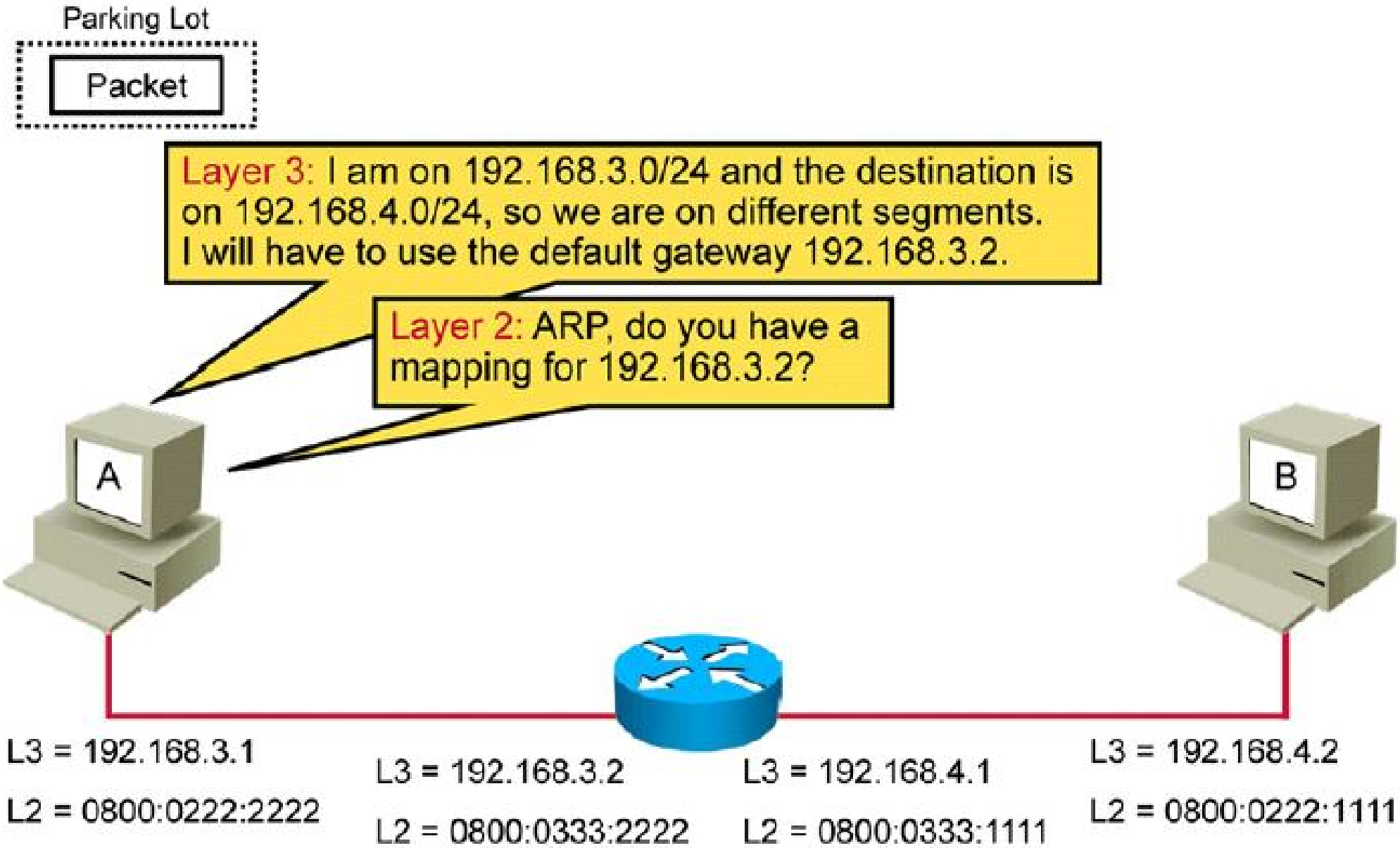

Host-to-Host Packet Delivery (8 of 19)

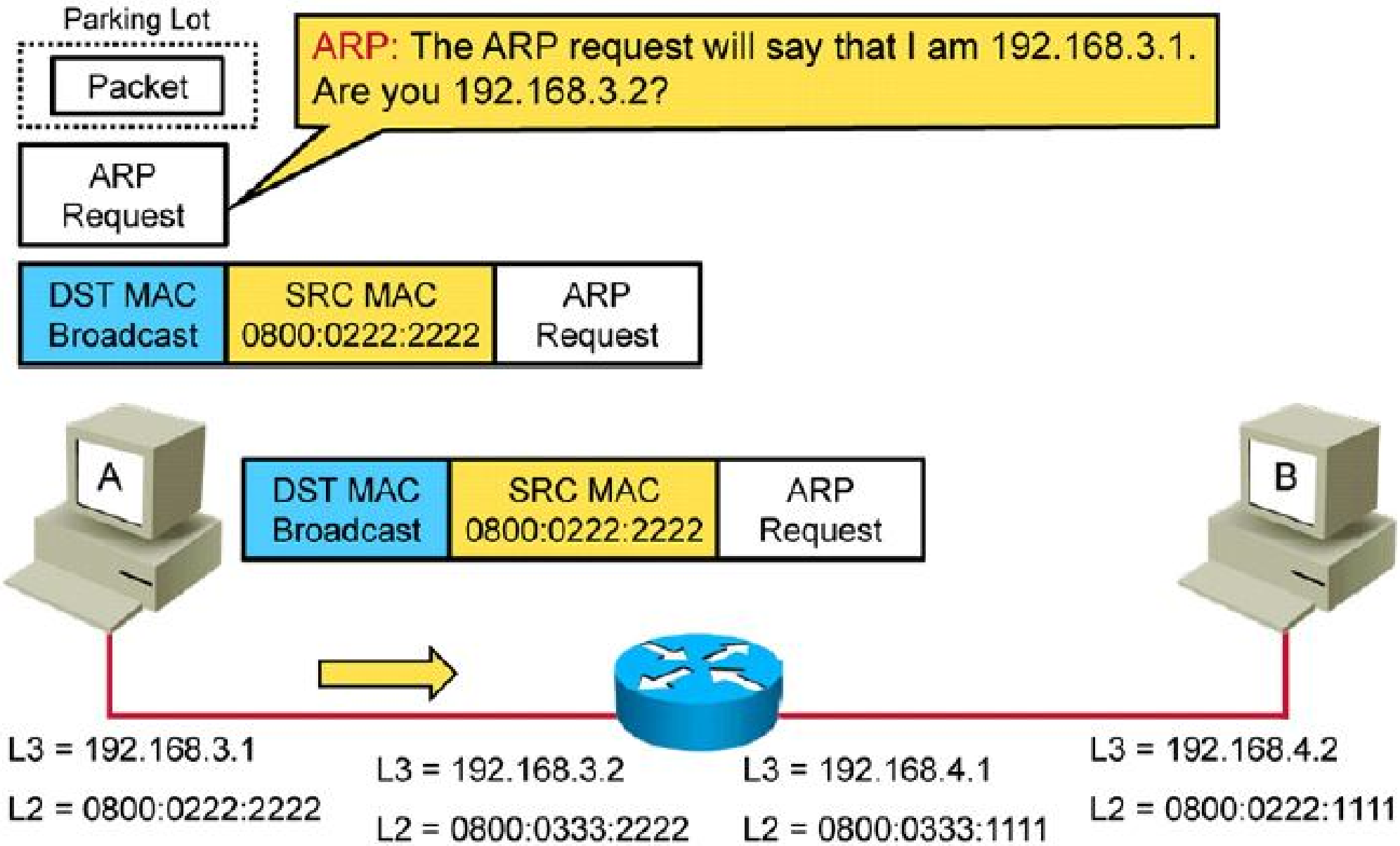

Host-to-Host Packet Delivery (9 of 19)

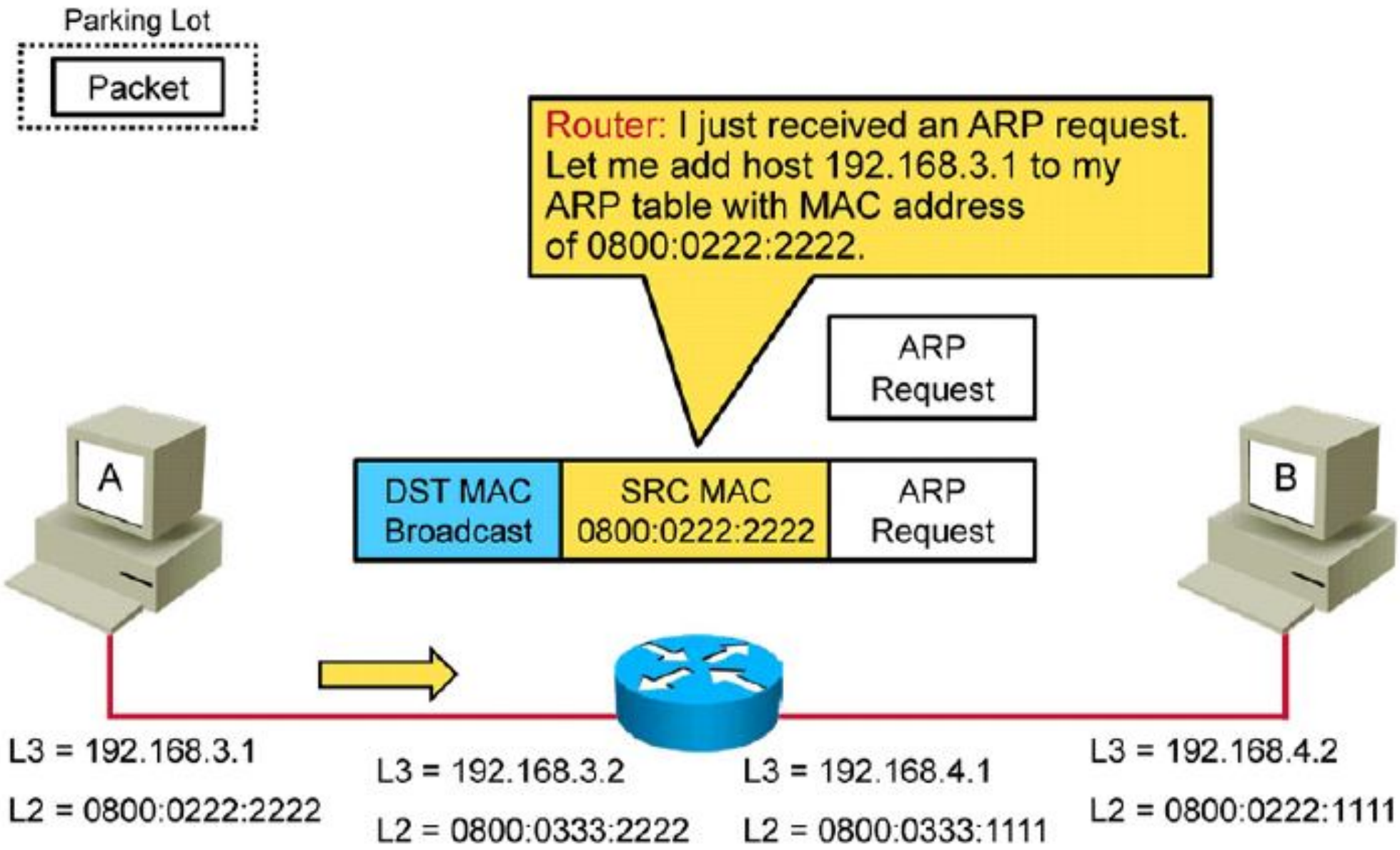

Host-to-Host Packet Delivery (10 of 19)

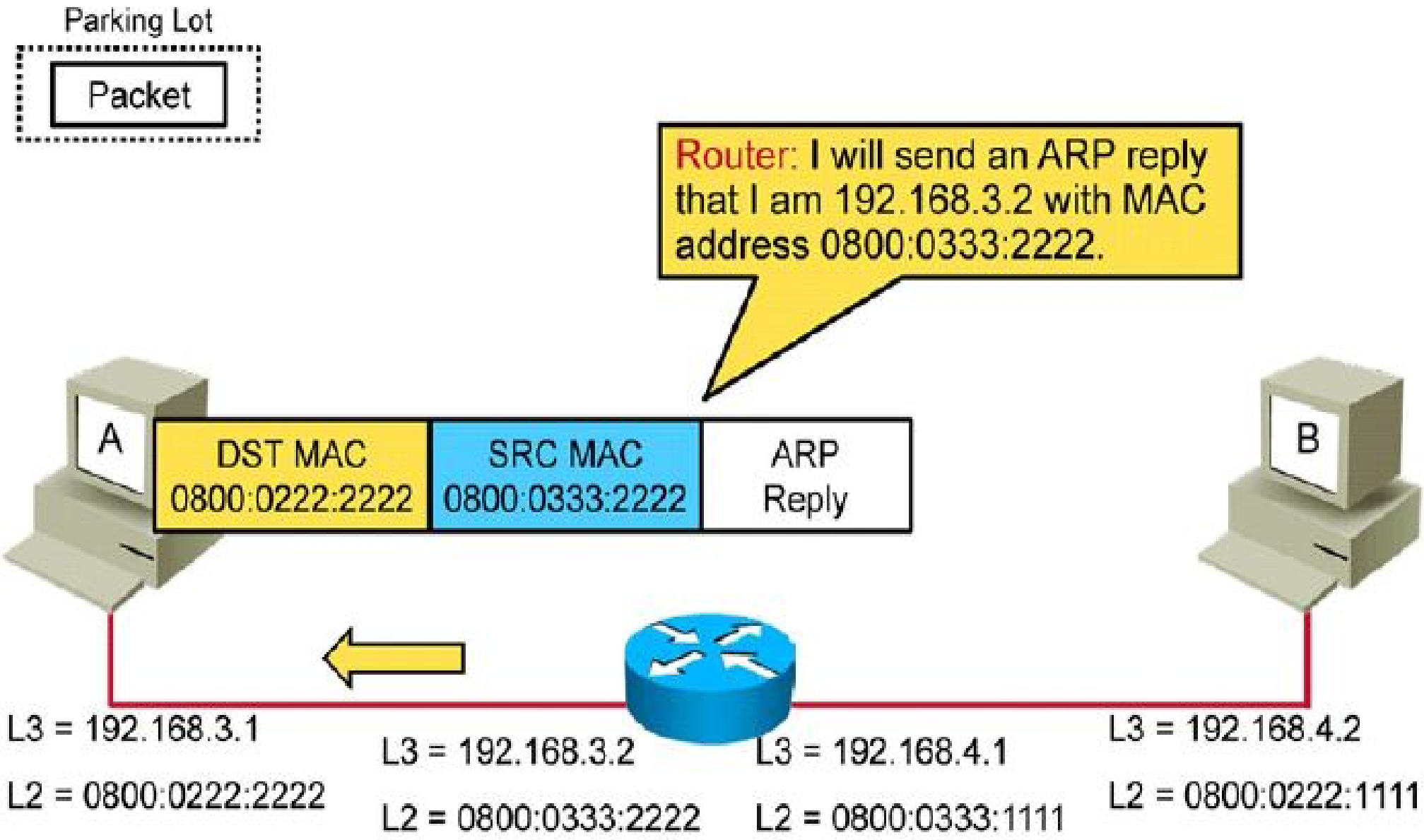

Host-to-Host Packet Delivery (11 of 19)

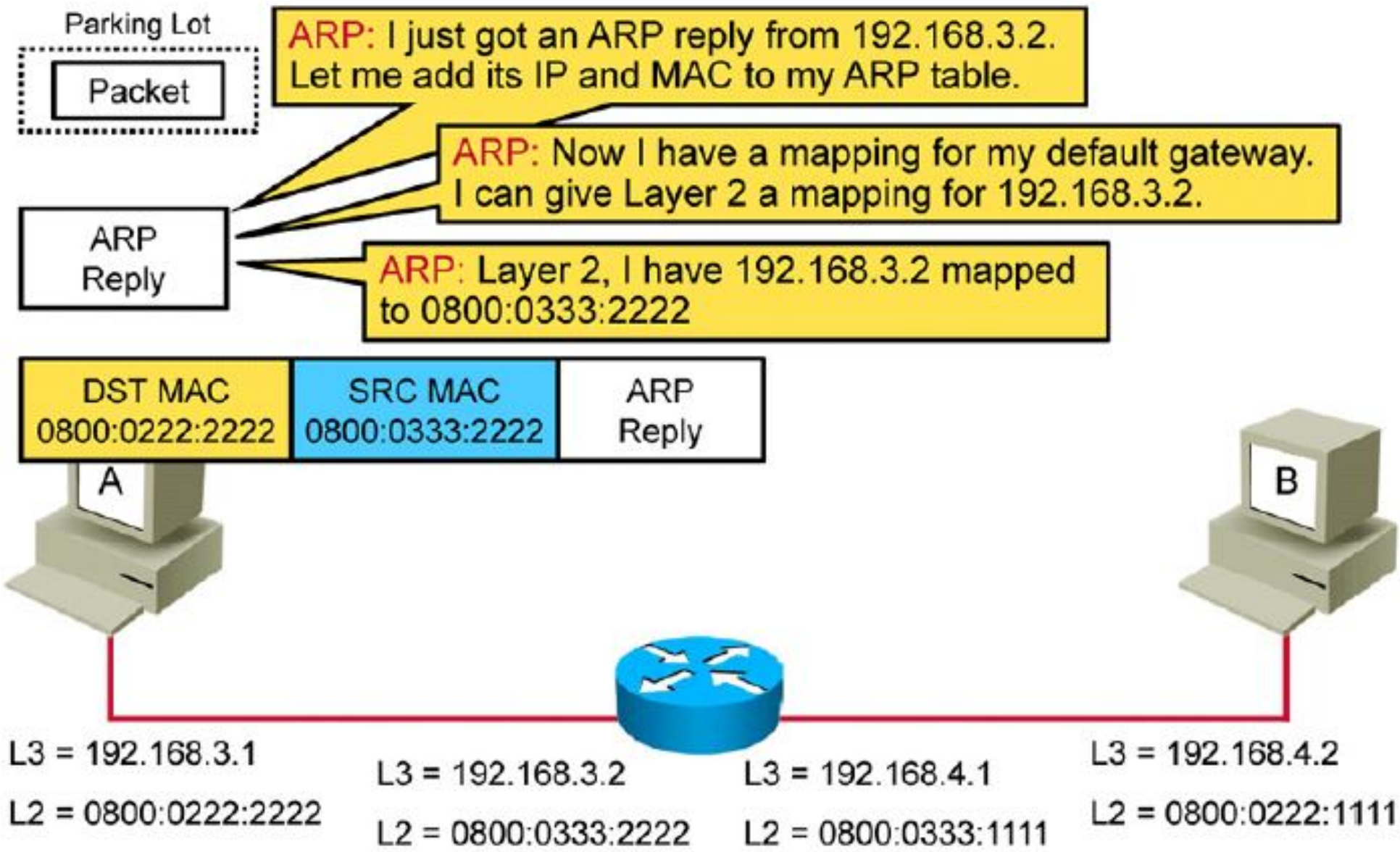

Host-to-Host Packet Delivery (12 of 19)

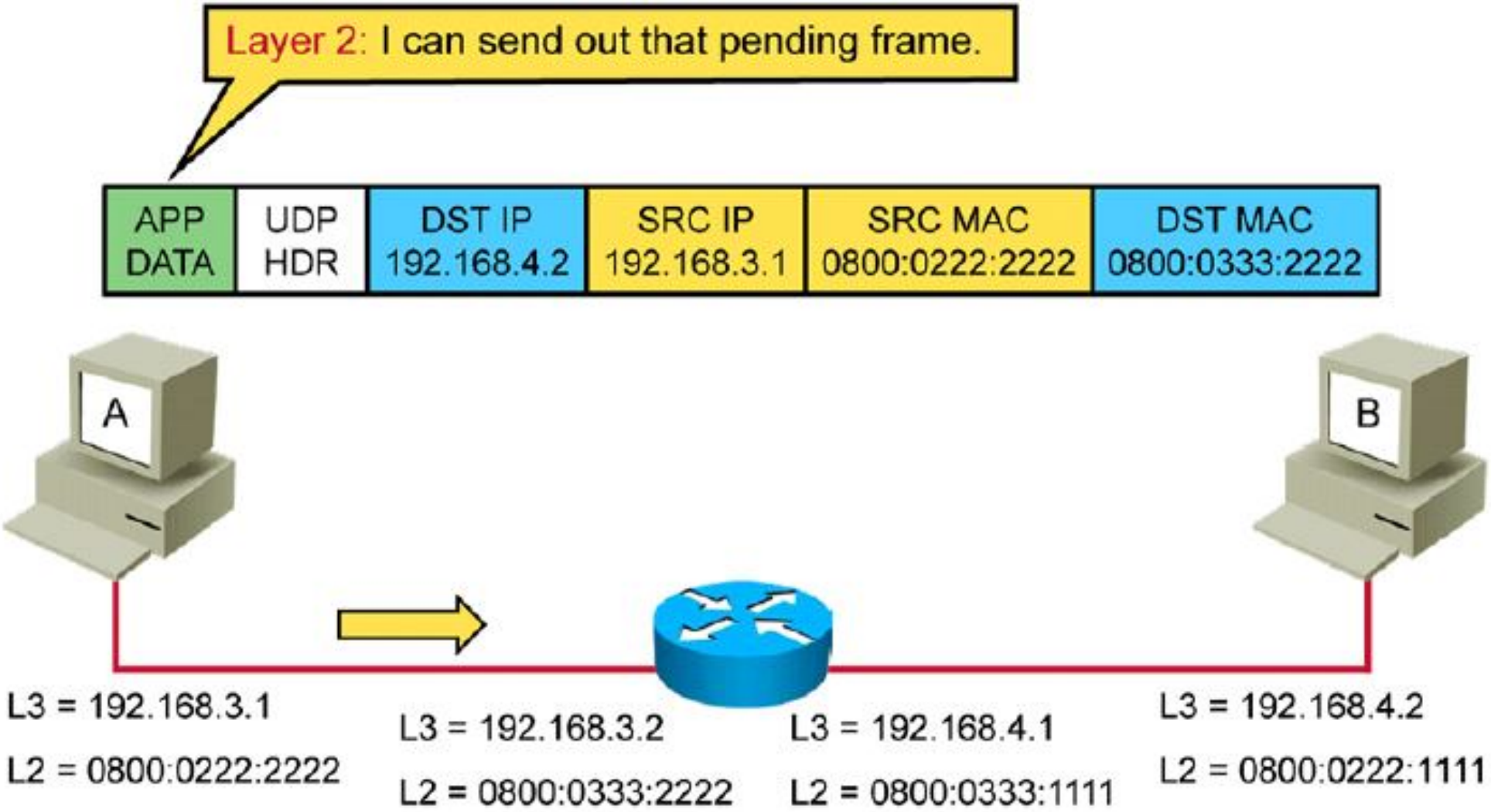

Host-to-Host Packet Delivery (13 of 19)

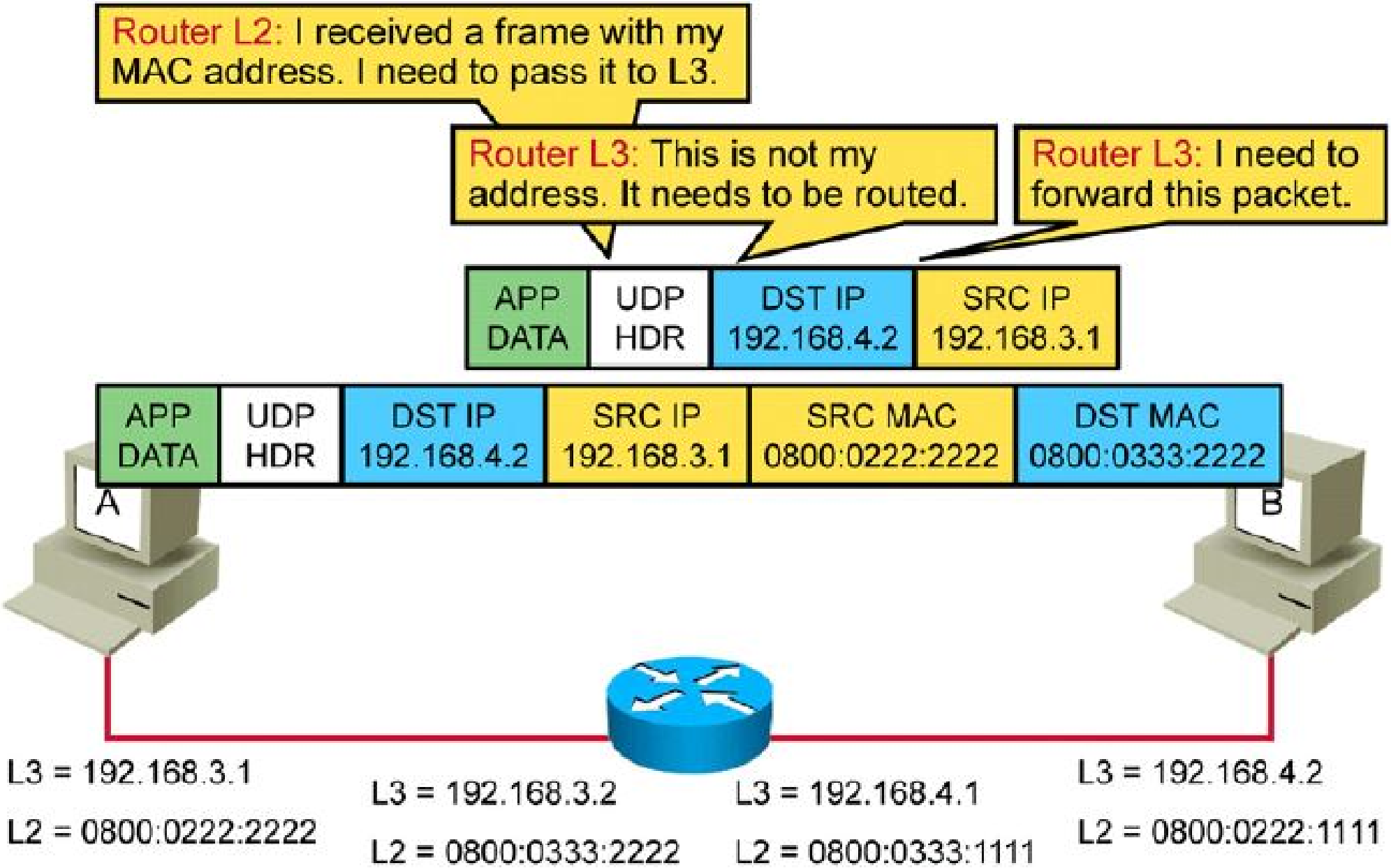

Host-to-Host Packet Delivery (14 of 19)

Destination	Next Hop	Interface
192.168.3.0/24	Connected	Gi 0/0
192.168.4.0/24	Connected	Gi 0/1

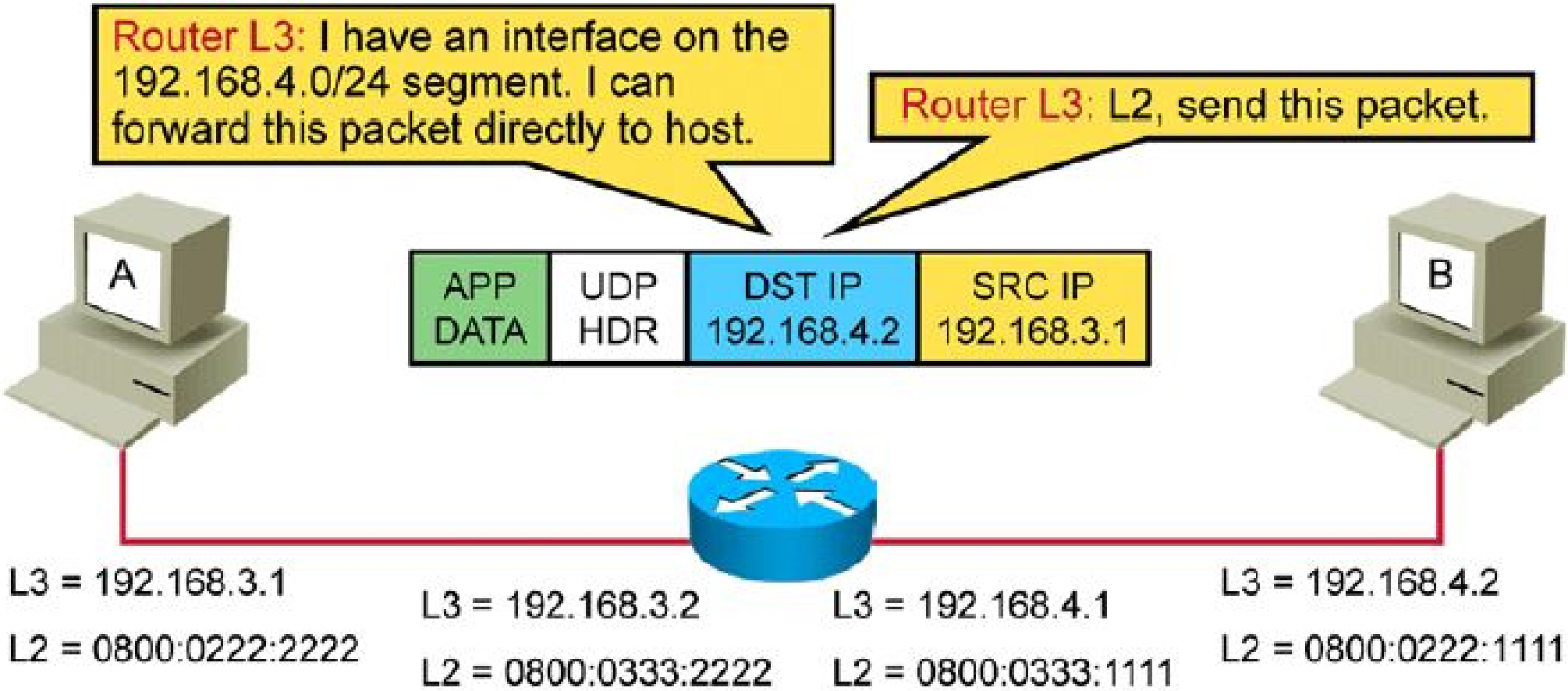

Host-to-Host Packet Delivery (15 of 19)

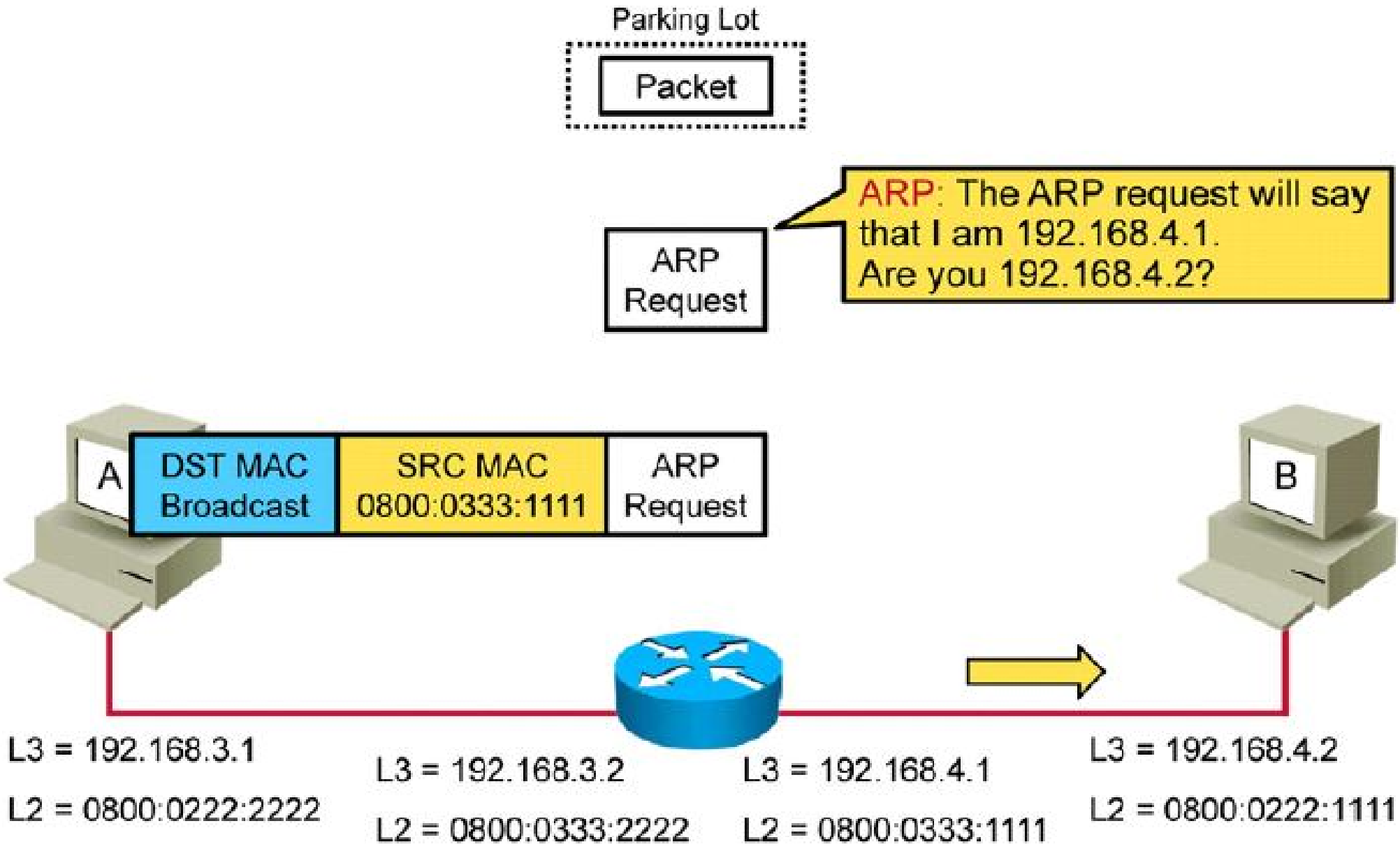

Host-to-Host Packet Delivery (16 of 19)

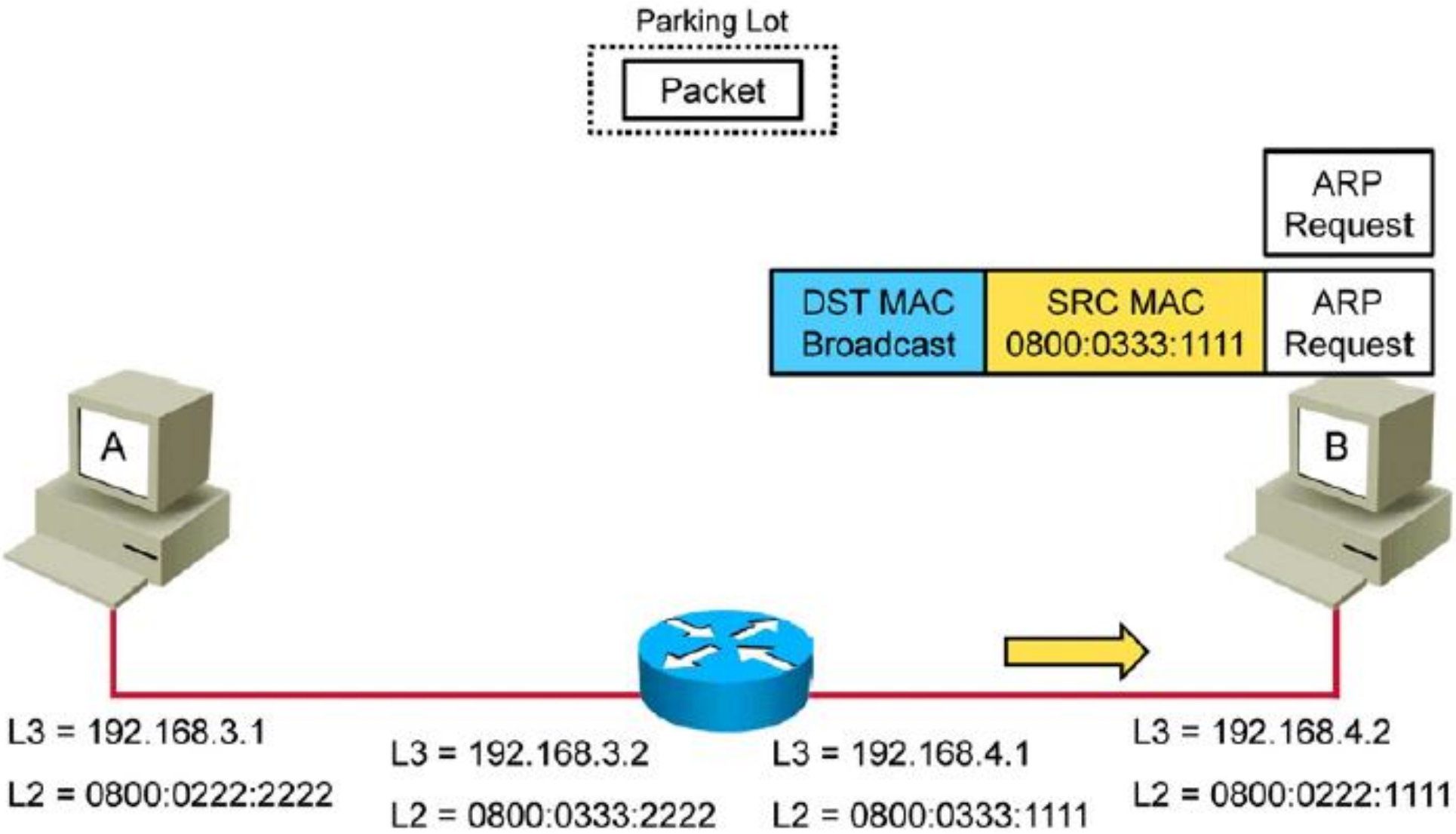

Host-to-Host Packet Delivery (17 of 19)

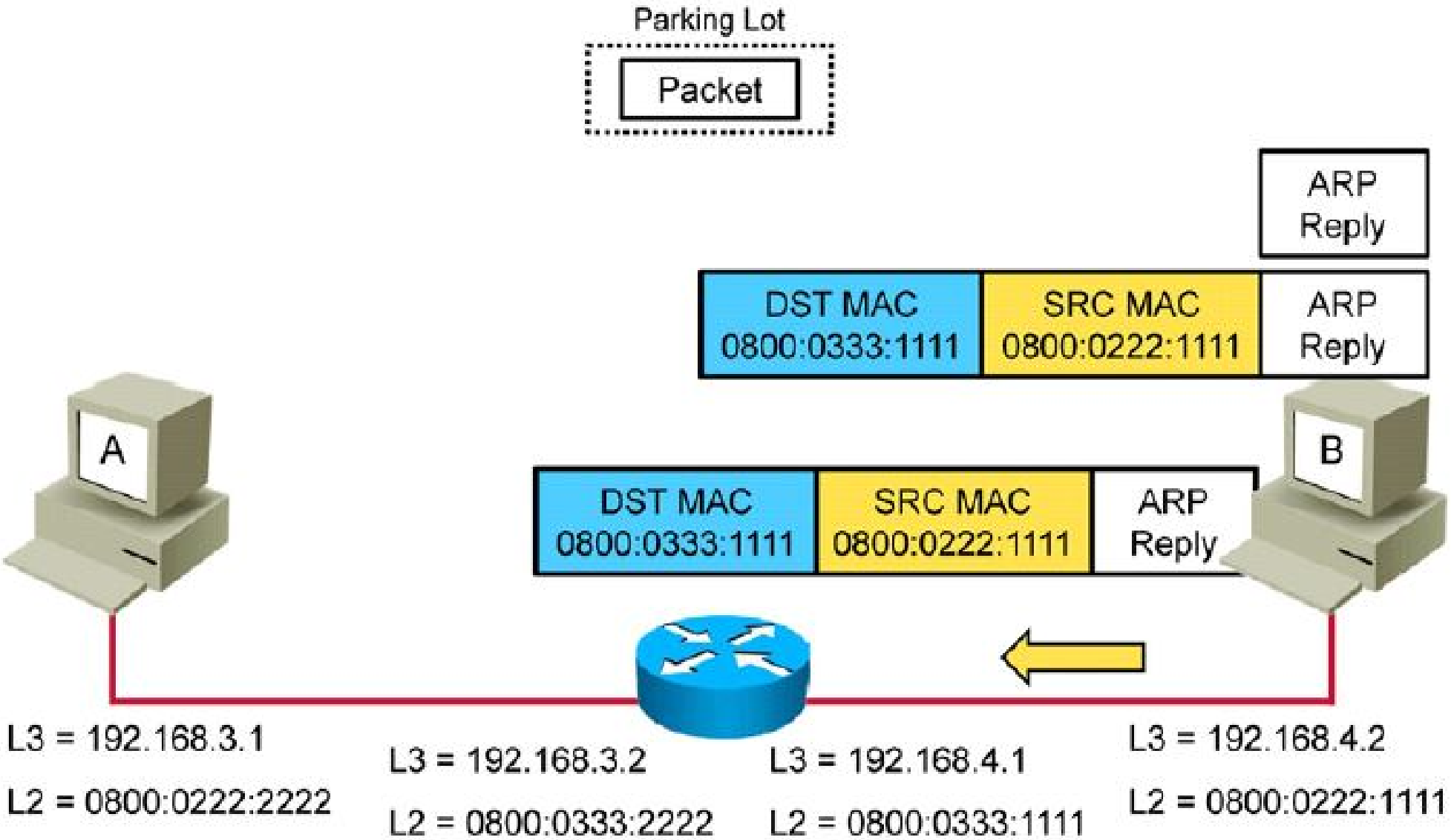

Host-to-Host Packet Delivery (18 of 19)

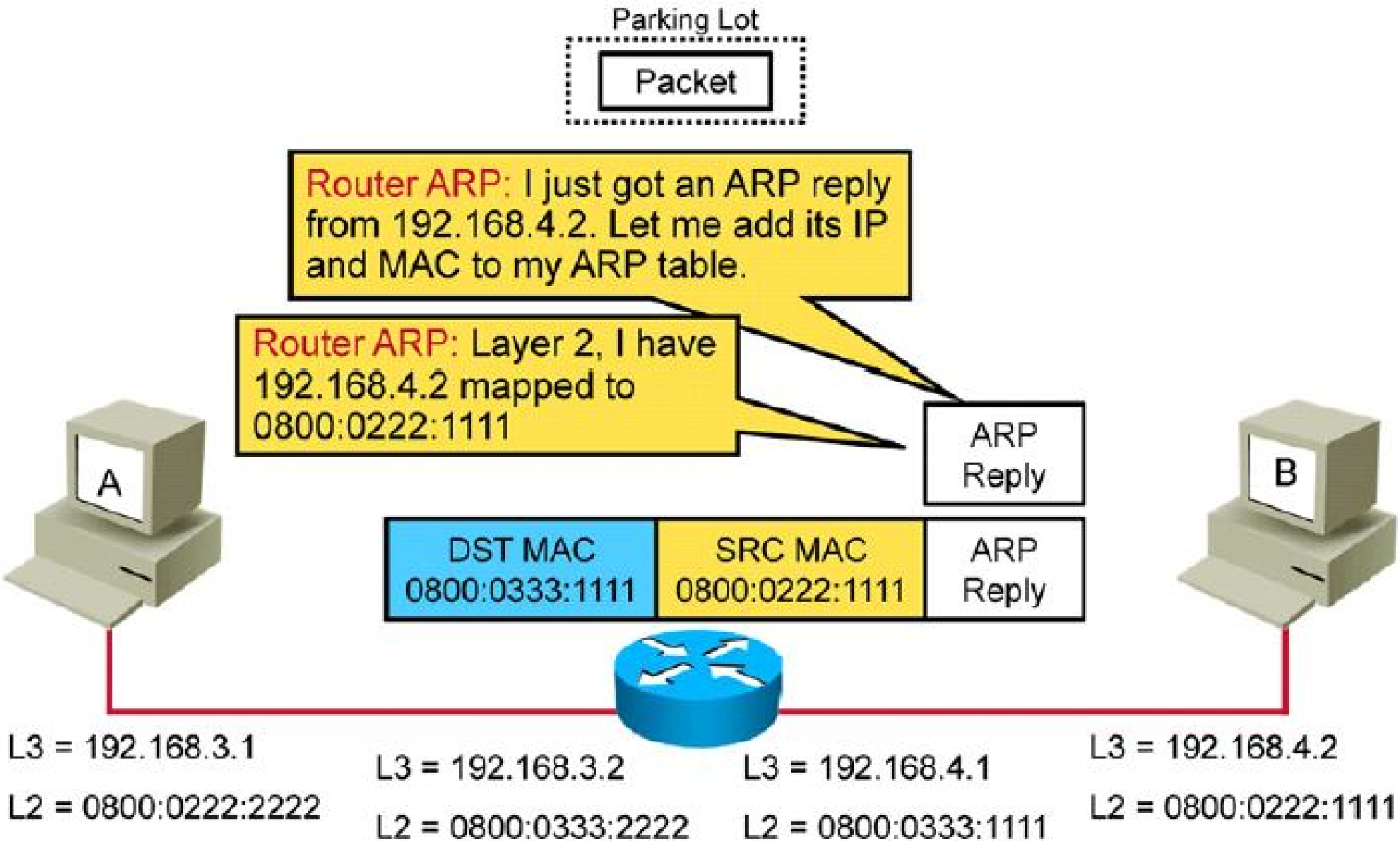
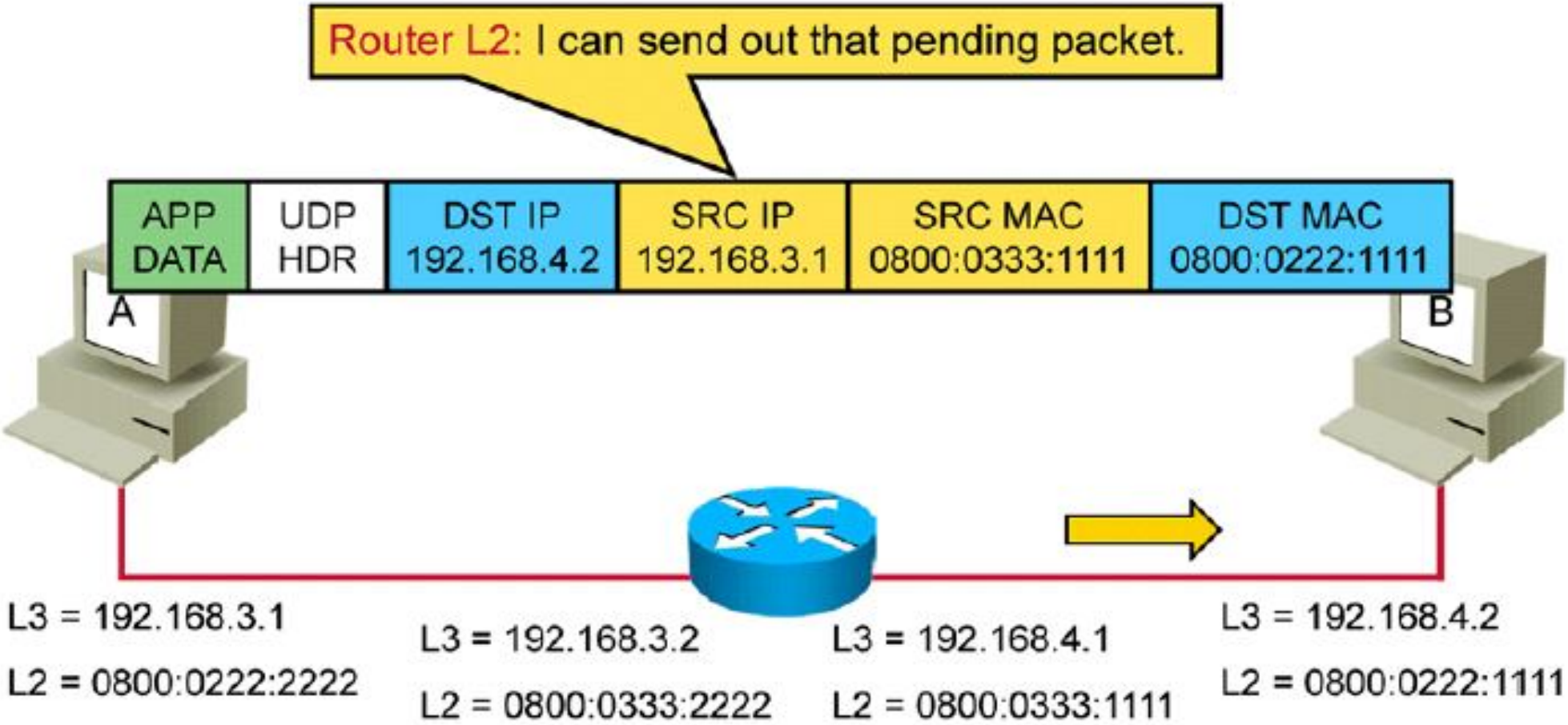
Host-to-Host Packet Delivery (19 of 19)