12-602.62X6 - SEATING LAYOUT FRT SECTION

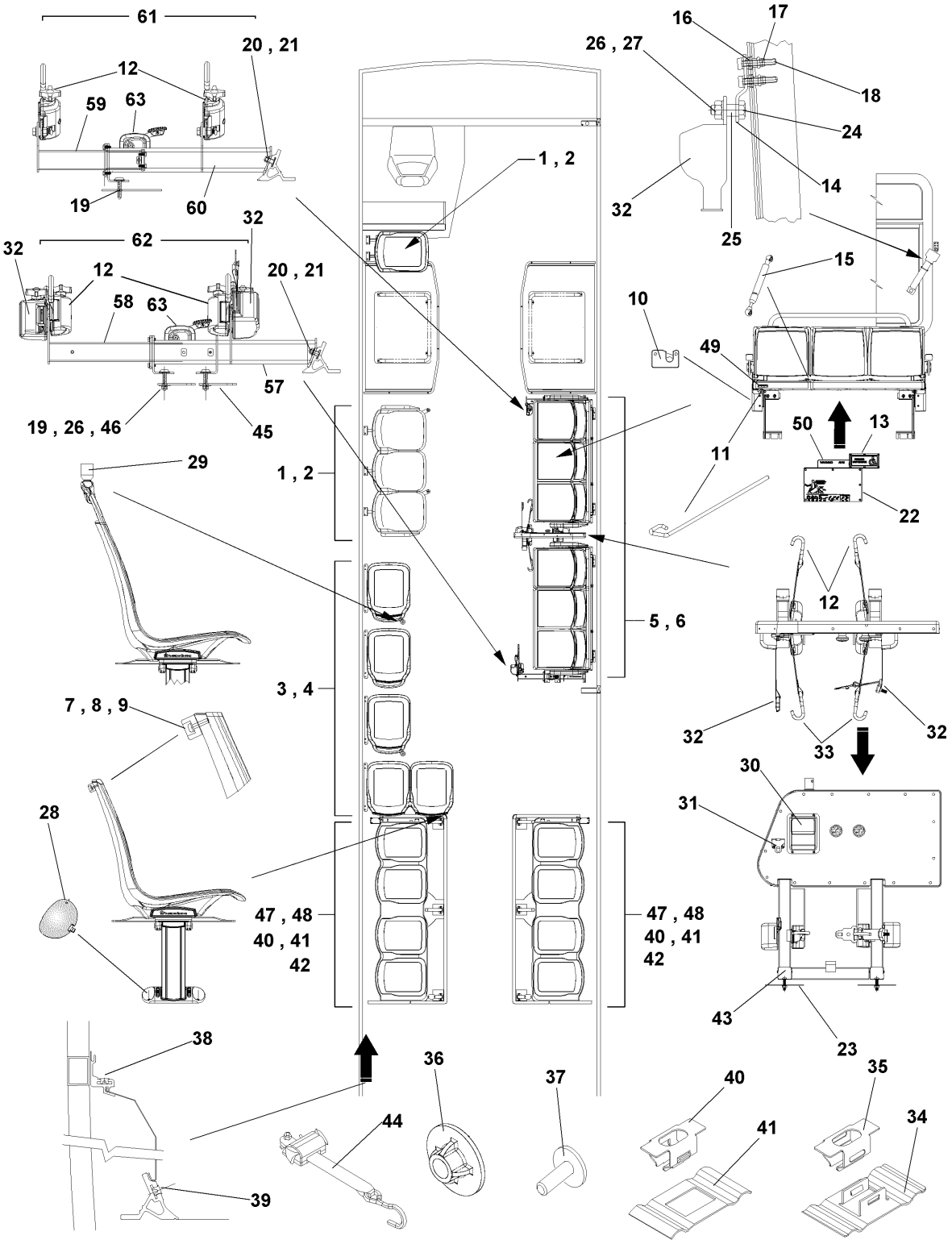

12-602.62X6 - SEATING LAYOUT FRT SECTION

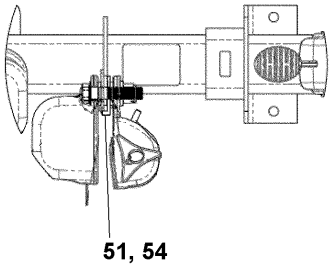

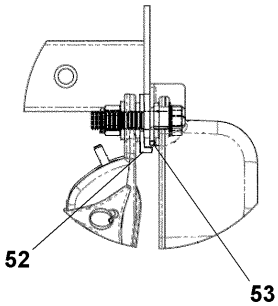

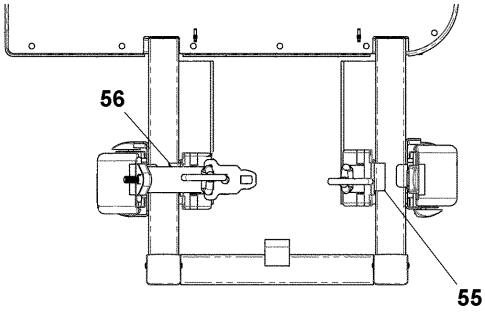

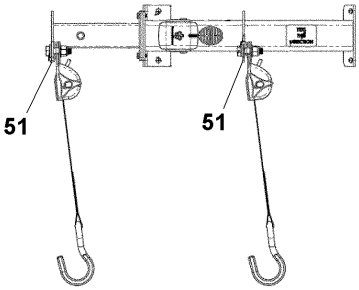

12-602.62X6 - SEATING LAYOUT FRT SECTION

Sup.	Has Recom.?	Is Assy.?	Item #	MFG Code	Part #	Description	Qty.	French	Remarks	Internal No	Vendor No.	Vendor Name	Note / Text
			1	NOVA	N8901287	BACK INSERT INSIGHT	4	COUSSIN DE DOSSIER INSIGHT			1584651PNTFM	AMERICAN SEATING	
			_REF	NOVA	N8896771	_HOOK	2	. CROCHET			151419000	AMERICAN SEATING	
			_REF	NOVA	N8896772	_BOLT 10-32 X 3/16	2	. BOULON 10-32 X 3/16			151367000	AMERICAN SEATING	
			_REF	NOVA	N8896812	_SEAT INSERT CLIP PLUG STYLE	2	. ATTACHE COUSSIN DE SIEGE TYPE BOUCHON			153353201	AMERICAN SEATING	
			_REF	NOVA	N8880482	_WIDE FLANGE SCREW 10-32 X 5/16 LG	2	. VIS À ÉPAULEMENT LARGE 10-32 X 5/16 LG			084108000	AMERICAN SEATING	
			2	NOVA	N8902437	CUSHION INSERT ASM INSIGHT	4	COUSSIN DE FESSIER ASS INSIGHT			1584671PNUQJ	AMERICAN SEATING	
			_REF	NOVA	N8896771	_HOOK	2	. CROCHET			151419000	AMERICAN SEATING	
			_REF	NOVA	N8896772	_BOLT 10-32 X 3/16	2	. BOULON 10-32 X 3/16			151367000	AMERICAN SEATING	
			_REF	NOVA	N8896812	_SEAT INSERT CLIP PLUG STYLE	2	. ATTACHE COUSSIN DE SIEGE TYPE BOUCHON			153353201	AMERICAN SEATING	
			_REF	NOVA	N8880482	_WIDE FLANGE SCREW 10-32 X 5/16 LG	2	. VIS À ÉPAULEMENT LARGE 10-32 X 5/16 LG			084108000	AMERICAN SEATING	
			3	NOVA	N8901289	BACK INSERT INSIGHT	5	COUSSIN DE DOSSIER INSIGHT			1584640PNTFM	AMERICAN SEATING	
			_REF	NOVA	N8896771	_HOOK	2	. CROCHET			151419000	AMERICAN SEATING	
			_REF	NOVA	N8896772	_BOLT 10-32 X 3/16	2	. BOULON 10-32 X 3/16			151367000	AMERICAN SEATING	
			_REF	NOVA	N8896769	_STUD 0.697" LG BACK / DOSSIER	2	. GOUJON 0.697" LG BACK / DOSSIER			111759004	AMERICAN SEATING	
			4	NOVA	N8902438	CUSHION INSERT ASM INSIGHT	5	COUSSIN DE FESSIER ASS INSIGHT			1584661PNUQJ	AMERICAN SEATING	
			_REF	NOVA	N8896771	_HOOK	2	. CROCHET			151419000	AMERICAN SEATING	
			_REF	NOVA	N8896772	_BOLT 10-32 X 3/16	2	. BOULON 10-32 X 3/16			151367000	AMERICAN SEATING	
			_REF	NOVA	N8896812	_SEAT INSERT CLIP PLUG STYLE	2	. ATTACHE COUSSIN DE SIEGE TYPE BOUCHON			153353201	AMERICAN SEATING	
			_REF	NOVA	N8880482	_WIDE FLANGE SCREW 10-32 X 5/16 LG	2	. VIS À ÉPAULEMENT LARGE 10-32 X 5/16 LG			084108000	AMERICAN SEATING	
			5	NOVA	N8901291	BACK INSERT 6468	6	COUSSIN DE DOSSIER 6468			1545630030PNTFM	AMERICAN SEATING	
X			_REF	NOVA	N8883301	_WIDE FLANGE SCREW 10-32 X 5/16	2	. VIS À ÉPAULEMENT LARGE 10-32 X 5/16			084108-000	AMERICAN SEATING	
X			_REF	NOVA	N8882688	_STUD 0.91" LG	2	. GOUJON 0.91" LG			111759	AMERICAN SEATING	
			6	NOVA	N8902439	CUSHION INSERT ASM 6468 F/U	6	COUSSIN DE FESSIER ASS 6468 F/U			1570710010PNUQJ	AMERICAN SEATING	
X			_REF	NOVA	N8882688	_STUD 0.91" LG	2	. GOUJON 0.91" LG			111759	AMERICAN SEATING	
X			_REF	NOVA	N8900219	_WIDE FLANGE SCREW 10-32 X 15/32	2	. VIS À ÉPAULEMENT LARGE 10-32 X 15/32			084108003	AMERICAN SEATING	
			7	NOVA	6940917	RUBBER BUMPER	1	BUTOIR CAOUTCHOUC			REC2098	ROBCO INC.	
			8	NOVA	449831	SCREW 10-24 X 1.00	1	VIS 10-24 X 1.00			STPPF010C0100Z	STANLEY	
			9	NOVA	120391	WASHER #10	1	RONDELLE #10			150-010	H PAULIN & CO LTD	
			10	NOVA	N8897379	ROD LATCH "LOCK UP"	2	LOQUET DE TIGE "LOCK UP"			146911000	AMERICAN SEATING	
			11	NOVA	N8902442	PULL ROD	2	TIRETTE			146840502	AMERICAN SEATING	
			12	NOVA	N8896671	WHEELCHAIR HOOK BELT	6	COURROIE AVEC CROCHET CHAISE ROULANTE			150711000	AMERICAN SEATING	
			13	NOVA	N8894711	TOUCH PAD ASM	2	BARRE POUSSOIR ARRET DEMANDE ASS			153131000	AMERICAN SEATING	
			14	NOVA	N21403	BELT SUPPORT	2	SUPPORT DE CEINTURE			N21403	ESTAMPRO	
			15	NOVA	N8897100	GAS SPRING	4	RESSORT A GAZ			143432001	AMERICAN SEATING	
			16	NOVA	N11183	WASHER M6	32	RONDELLE M6			38080 060 001	METRICAN FASTENERS LTD.	
			17	NOVA	N17203	RIVNUT M6 X 1,00 GR3	8	ECROU SERTISSABLE M6 X 1,00 GR3			69120 060 055	METRICAN FASTENERS LTD.	
			18	NOVA	N20301	SCREW M6 X 30	8	VIS M6 X 30			51340	METRICAN FASTENERS LTD.	
			19	NOVA	9429477	SCREW 3/8-16 X 2.00	6	VIS 3/8-16 X 2.00			9429477	METRICAN FASTENERS LTD.	
X			20	NOVA	N25063	SPECIAL BOLT RECTANGULAR HEAD 3/8-24 x 1.070"	4	ECROU SPECIAL TETE RECTANGULAIRE 3/8-24 x 1.070"			N25063	TRU-FIT	
X			21	NOVA	N37109	FLANGED NUT 3/8-24	4	ECROU A EPAULEMENT 3/8-24			4127248	BOSSARD CANADABOSSARD CANADA	
			22	NOVA	N8901714	PLATE "INSTRUCTIONS" ENG. / FR.	2	PLAQUE "INSTRUCTIONS" ENG. / FR.			149234014	AMERICAN SEATING	
			23	NOVA	N25253	TAPPING PLATE 148mm X 160mm	4	PLAQUE DE VISSAGE 148mm X 160mm			PRIMER 206 G+P	USINAGE LAURENTIDES INC.	
			24	NOVA	10534350	SCREW 3/8-16 X 1.50	2	VIS 3/8-16 X 1.50			4127451	BOSSARD CANADA	

Sup.	Has Recom.?	Is Assy.?	Item #	MFG Code	Part #	Description	Qty.	French	Remarks	Internal No	Vendor No.	Vendor Name	Note / Text
			25	NOVA	N21456	BUSHING	2	COUSSINET			205	ATELIER MACHINISTE FAUTEUX INC.	
			26	NOVA	N16645	WASHER M10	6	RONDELLE M10			51420 100 001	METRICAN FASTENERS LTD.	
			27	NOVA	9422297	LOCK NUT 3/8-16	2	ECROU D'ARRET 3/8-16			205	METRICAN FASTENERS LTD.	
			28	NOVA	N8898760	SPHERICAL PLASTIC CAP GRIS / GREY	14	CAPUCHON SPHERIQUE EN PLASTIQUE GRIS / GREY			150907000	AMERICAN SEATING	
			29	NOVA	N8897174	STANCHION CUP ASM INSIGHT	2	ANCRAGE DE POTEAU ASS. INSIGHT			152841100	AMERICAN SEATING	
X			_REF	NOVA	N8900141	_BUSHING STANCHION CUP 2 1/8" R0.06"	0	. COUSSINET D'ANCRAGE DE POTEAU 2 1/8" R0.06"			152837000	AMERICAN SEATING	
			_REF	NOVA	N8902928	_BUSHING STANCHION CUP 2 1/8" R0.10" rev.A 3/27/2015	1	. COUSSINET D'ANCRAGE DE POTEAU 2 1/8" R0.10" rev.A 3/27/2015			152837000	AMERICAN SEATING CO.	
			30	NOVA	N8897475	BELT RELEASE LATCH	2	LEVIER DE DECLENCHEMENT DES CEINTURES			139992500	AMERICAN SEATING	
			31	NOVA	N8898903	BUCKLE HOLDER	1	PORTE BOUCLE			149370000	AMERICAN SEATING	
X			32	NOVA	N8896672	LAP & SHOULDER BELT	2	CEINTURE BAUDRIER			143999000	AMERICAN SEATING	
			33	NOVA	N8896673	WHEELCHAIR HOOK BELT	2	COURROIE AVEC CROCHET CHAISE ROULANTE			150721000	AMERICAN SEATING	
			34	NOVA	N8895312	CLIP RETAINER TAB INSIGHT	QR	LANGUETTE DE RETENUE INSIGHT			150793000	AMERICAN SEATING	
			35	NOVA	N8895368	CLIP SPRING INSIGHT	QR	ATTACHE RESSORT INSIGHT			150792000	AMERICAN SEATING	
			36	NOVA	N8896812	SEAT INSERT CLIP PLUG STYLE	QR	ATTACHE COUSSIN DE SIEGE TYPE BOUCHON			153353201	AMERICAN SEATING	
X			37	NOVA	N8883301	WIDE FLANGE SCREW 10-32 X 5/16	QR	VIS À ÉPAULEMENT LARGE 10-32 X 5/16			084108-000	AMERICAN SEATING	
			38	NOVA	N24490	VINYL EXTRUSION UPPER / HAUT	QR	EXTRUSION DE CAOUTCHOUC UPPER / HAUT			2526-1	CHARDON RUBBER CO.	
			39	NOVA	N43960	VINYL TRIM LOWER / BAS	QR	GARNITURE DE VINYLE LOWER / BAS			N43960	NOVA BUS - LFS	
X			40	NOVA	N8888431	CLIP RETAINER TOP	32	ANCRAGE DE CLIP DESSUS			114879000	AMERICAN SEATING	
X			41	NOVA	N8888432	CLIP RETAINER	32	ANCRAGE DE CLIP			114880000	AMERICAN SEATING	
			42	NOVA	12-102	SEE SEAT MID AXLE SECTION	1	VOIR SECTION SIEGE ESSIEU CENTRAL					
			43	NOVA	N8900712	PED CAP	4	BOUCHON PIEDESTAL			152627000	AMERICAN SEATING	
			44	NOVA	N8896670	FLOOR BELT WITH HOOK / AVEC CROCHET	2	COURROIE AU PLANCHER WITH HOOK / AVEC CROCHET			150716000	AMERICAN SEATING	
			45	NOVA	N45459	PLATE FLOOR TAPPING 100mm X 100mm	4	PLAQUE DE VISSAGE DE PLANCHER 100mm X 100mm			N45459	ESTAMPRO	
			46	NOVA	N23566	LOCK NUT 3/8-16	4	ECROU D'ARRET 3/8-16			51420	METRICAN FASTENERS LTD.	
			47	NOVA	N8901293	BACK INSERT INSIGHT	8	COUSSIN DE DOSSIER INSIGHT			1584650PNTFM	AMERICAN SEATING	
			_REF	NOVA	N8896771	_HOOK	2	. CROCHET			151419000	AMERICAN SEATING	
			_REF	NOVA	N8896772	_BOLT 10-32 X 3/16	2	. BOULON 10-32 X 3/16			151367000	AMERICAN SEATING	
			_REF	NOVA	N8896769	_STUD 0.697" LG BACK / DOSSIER	2	. GOUJON 0.697" LG BACK / DOSSIER			111759004	AMERICAN SEATING	
			48	NOVA	N8902436	CUSHION INSERT ASM INSIGHT	8	COUSSIN DE FESSIER ASS INSIGHT			1584670PNUQJ	AMERICAN SEATING	
			_REF	NOVA	N8896770	_STUD	2	. GOUJON			111759002	AMERICAN SEATING	
			_REF	NOVA	N8896771	_HOOK	2	. CROCHET			151419000	AMERICAN SEATING	
			_REF	NOVA	N8896772	_BOLT 10-32 X 3/16	2	. BOULON 10-32 X 3/16			151367000	AMERICAN SEATING	
			49	NOVA	N8901713	LABEL "RELEASE" ENG. / FR.	2	ETIQUETTE "RELEASE" ENG. / FR.			135962000	AMERICAN SEATING	
			50	NOVA	N8901715	LABEL "WARNING" / "AVIS"	2	ETIQUETTE "WARNING" / "AVIS"			137064000	AMERICAN SEATING	
			51	NOVA	N8903401	ANTIROTATION BRACKET BELT / CEINTURE	3	SUPPORT ANTIROTATION BELT / CEINTURE			136661522	AMERICAN SEATING	
			52	NOVA	N8903402	ANTIROTATION BRACKET BELT / CEINTURE	1	SUPPORT ANTIROTATION BELT / CEINTURE			136662522	AMERICAN SEATING	
			53	NOVA	N8903403	ANTIROTATION BRACKET BELT / CEINTURE	1	SUPPORT ANTIROTATION BELT / CEINTURE			136661524	AMERICAN SEATING	
			54	NOVA	N8903404	ANTIROTATION BRACKET BELT CEINTURE	1	SUPPORT ANTIROTATION BELT CEINTURE			136662523	AMERICAN SEATING	
			55	NOVA	N8903405	ANTIROTATION BRACKET BELT / CEINTURE	1	SUPPORT ANTIROTATION BELT / CEINTURE			136662500	AMERICAN SEATING	
			56	NOVA	19503690	ANTIROTATION BRACKET BELT / CEINTURE	1	SUPPORT ANTIROTATION BELT / CEINTURE					
			57	NOVA	N8905232	ARM WELD BRACKET YELLOW / JAUNE	1	SUPPORT BRAS SOUDE YELLOW / JAUNE			156721Y07	AMERICAN SEATING	
			58	NOVA	N8905233	ARM SLIDING LH / GAU - YELLOW/JAUNE	1	BRAS COULISSANT LH / GAU - YELLOW/JAUNE			136497Y09	AMERICAN SEATING	
			59	NOVA	N8905234	ARM SLIDING RH / DR - YELLOW/JAUNE	1	BRAS COULISSANT RH / DR - YELLOW/JAUNE			136496Y09	AMERICAN SEATING	

Sup.	Has Recom.?	Is Assy.?	Item #	MFG Code	Part #	Description	Qty.	French	Remarks	Internal No	Vendor No.	Vendor Name	Note / Text
			60	NOVA	N8905235	ARM WELD BRACKET YELLOW / JAUNE	1	SUPPORT BRAS SOUDE YELLOW / JAUNE			153102Y10	AMERICAN SEATING	
			61	NOVA	N8905243	ARM ASM SLIDE FRT / COULISSANT AV	1	BRAS ASS SLIDE FRT / COULISSANT AV	#		153076Y90	AMERICAN SEATING	
			62	NOVA	N8905244	ARM ASM SLIDE REAR / COULISSANT ARR	1	BRAS ASS SLIDE REAR / COULISSANT ARR	##		157010Y09	AMERICAN SEATING	
			63	NOVA	N8906118	COVER LATCH FOR ARM SLIDE	2	COUVERCLE LOQUET FOR ARM SLIDE			149361001	AMERICAN SEATING	
			501	NOVA	N32989	SEALANT BUTYL 757	QR	SCELLANT BUTYL 757			#757 BUTYL(HBF)	MIN-CHEM CANADA INC.	
			502	NOVA	N72244	SEAT SET ASM	1	ENSEMBLE DE SIEGES ASS	§		N72244	OTACO	

ITEMS 12- 59- 60 PART OF ITEM 61

ITEMS 12- 57- 58 PART OF 62

§ FOR REFERENCE ONLY

12-602.63X6 - SEATING LAYOUT RR SECTION

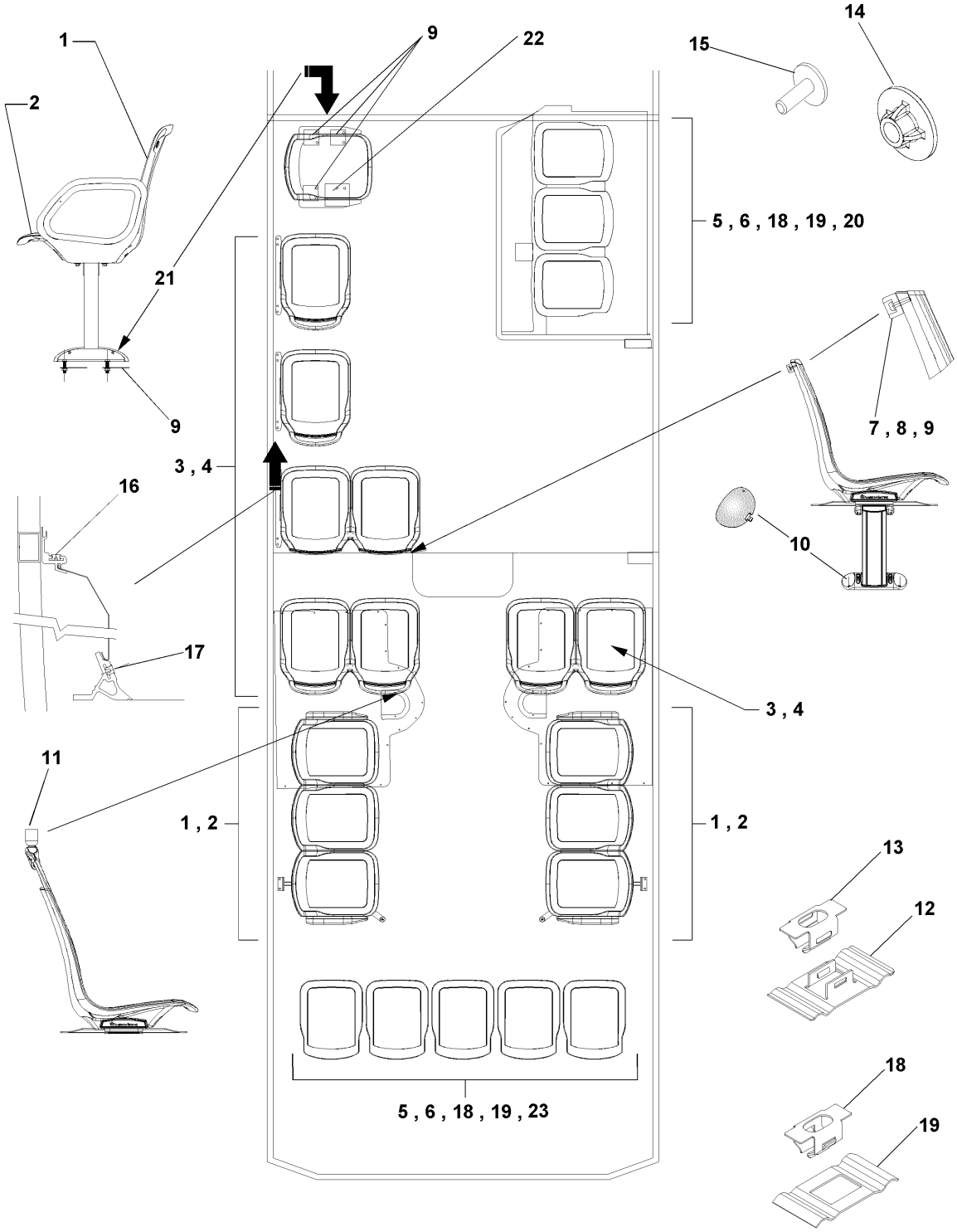

12-602.63X6 - SEATING LAYOUT RR SECTION

Sup.	Has Recom.?	Is Assy.?	Item #	MFG Code	Part #	Description	Qty.	French	Remarks	Internal No	Vendor No.	Vendor Name	Note / Text
			1	NOVA	N8901287	BACK INSERT INSIGHT	7	COUSSIN DE DOSSIER INSIGHT			1584651PNTFM	AMERICAN SEATING	
			_REF	NOVA	N8896771	_HOOK	2	. CROCHET			151419000	AMERICAN SEATING	
			_REF	NOVA	N8896772	_BOLT 10-32 X 3/16	2	. BOULON 10-32 X 3/16			151367000	AMERICAN SEATING	
			_REF	NOVA	N8896812	_SEAT INSERT CLIP PLUG STYLE	2	. ATTACHE COUSSIN DE SIEGE TYPE BOUCHON			153353201	AMERICAN SEATING	
			_REF	NOVA	N8880482	_WIDE FLANGE SCREW 10-32 X 5/16 LG	2	. VIS À ÉPAULEMENT LARGE 10-32 X 5/16 LG			084108000	AMERICAN SEATING	
			2	NOVA	N8901288	BOTTOM INSERT INSIGHT	7	COUSSIN DE FESSIER INSIGHT			1584671PNTFM	AMERICAN SEATING	
			_REF	NOVA	N8896771	_HOOK	2	. CROCHET			151419000	AMERICAN SEATING	
			_REF	NOVA	N8896772	_BOLT 10-32 X 3/16	2	. BOULON 10-32 X 3/16			151367000	AMERICAN SEATING	
			_REF	NOVA	N8896812	_SEAT INSERT CLIP PLUG STYLE	2	. ATTACHE COUSSIN DE SIEGE TYPE BOUCHON			153353201	AMERICAN SEATING	
			_REF	NOVA	N8880482	_WIDE FLANGE SCREW 10-32 X 5/16 LG	2	. VIS À ÉPAULEMENT LARGE 10-32 X 5/16 LG			084108000	AMERICAN SEATING	
			3	NOVA	N8901289	BACK INSERT INSIGHT	8	COUSSIN DE DOSSIER INSIGHT			1584640PNTFM	AMERICAN SEATING	
			_REF	NOVA	N8896771	_HOOK	2	. CROCHET			151419000	AMERICAN SEATING	
			_REF	NOVA	N8896772	_BOLT 10-32 X 3/16	2	. BOULON 10-32 X 3/16			151367000	AMERICAN SEATING	
			_REF	NOVA	N8896769	_STUD 0.697" LG BACK / DOSSIER	2	. GOUJON 0.697" LG BACK / DOSSIER			111759004	AMERICAN SEATING	
			4	NOVA	N8901290	BOTTOM INSERT INSIGHT	8	COUSSIN DE FESSIER INSIGHT			1584661PNTFM	AMERICAN SEATING	
			_REF	NOVA	N8896771	_HOOK	2	. CROCHET			151419000	AMERICAN SEATING	
			_REF	NOVA	N8896772	_BOLT 10-32 X 3/16	2	. BOULON 10-32 X 3/16			151367000	AMERICAN SEATING	
			_REF	NOVA	N8896812	_SEAT INSERT CLIP PLUG STYLE	2	. ATTACHE COUSSIN DE SIEGE TYPE BOUCHON			153353201	AMERICAN SEATING	
			_REF	NOVA	N8880482	_WIDE FLANGE SCREW 10-32 X 5/16 LG	2	. VIS À ÉPAULEMENT LARGE 10-32 X 5/16 LG			084108000	AMERICAN SEATING	
			5	NOVA	N8901293	BACK INSERT INSIGHT	8	COUSSIN DE DOSSIER INSIGHT			1584650PNTFM	AMERICAN SEATING	
			_REF	NOVA	N8896771	_HOOK	2	. CROCHET			151419000	AMERICAN SEATING	
			_REF	NOVA	N8896772	_BOLT 10-32 X 3/16	2	. BOULON 10-32 X 3/16			151367000	AMERICAN SEATING	
			_REF	NOVA	N8896769	_STUD 0.697" LG BACK / DOSSIER	2	. GOUJON 0.697" LG BACK / DOSSIER			111759004	AMERICAN SEATING	
			6	NOVA	N8901294	BOTTOM INSERT INSIGHT	8	COUSSIN DE FESSIER INSIGHT			1584670PNTFM	AMERICAN SEATING	
			_REF	NOVA	N8896770	_STUD	2	. GOUJON			111759002	AMERICAN SEATING	
			_REF	NOVA	N8896771	_HOOK	2	. CROCHET			151419000	AMERICAN SEATING	
			_REF	NOVA	N8896772	_BOLT 10-32 X 3/16	2	. BOULON 10-32 X 3/16			151367000	AMERICAN SEATING	
			7	NOVA	6940917	RUBBER BUMPER	1	BUTOIR CAOUTCHOUC			REC2098	ROBCO INC.	
			8	NOVA	449831	SCREW 10-24 X 1.00	1	VIS 10-24 X 1.00			STPPF010C0100Z	STANLEY	
			9	NOVA	N25253	TAPPING PLATE 148mm X 160mm	1	PLAQUE DE VISSAGE 148mm X 160mm			PRIMER 206 G+P	USINAGE LAURENTIDES INC.	
			10	NOVA	N8898760	SPHERICAL PLASTIC CAP GRIS / GREY	4	CAPUCHON SPHERIQUE EN PLASTIQUE GRIS / GREY			150907000	AMERICAN SEATING	
			11	NOVA	N8897174	STANCHION CUP ASM INSIGHT	2	ANCRAGE DE POTEAU ASS. INSIGHT			152841100	AMERICAN SEATING	
X			_REF	NOVA	N8900141	_BUSHING STANCHION CUP 2 1/8" R0.06"	0	. COUSSINET D'ANCRAGE DE POTEAU 2 1/8" R0.06"			152837000	AMERICAN SEATING	
			_REF	NOVA	N8902928	_BUSHING STANCHION CUP 2 1/8" R0.10" rev.A 3/27/2015	1	. COUSSINET D'ANCRAGE DE POTEAU 2 1/8" R0.10" rev.A 3/27/2015			152837000	AMERICAN SEATING CO.	
			12	NOVA	N8895312	CLIP RETAINER TAB INSIGHT	QR	LANGUETTE DE RETENUE INSIGHT			150793000	AMERICAN SEATING	
			13	NOVA	N8895368	CLIP SPRING INSIGHT	QR	ATTACHE RESSORT INSIGHT			150792000	AMERICAN SEATING	
			14	NOVA	N8896812	SEAT INSERT CLIP PLUG STYLE	QR	ATTACHE COUSSIN DE SIEGE TYPE BOUCHON			153353201	AMERICAN SEATING	
X			15	NOVA	N8883301	WIDE FLANGE SCREW 10-32 X 5/16	QR	VIS À ÉPAULEMENT LARGE 10-32 X 5/16			084108-000	AMERICAN SEATING	
			16	NOVA	N24490	VINYL EXTRUSION UPPER / HAUT	QR	EXTRUSION DE CAOUTCHOUC UPPER / HAUT			2526-1	CHARDON RUBBER CO.	
			17	NOVA	N43960	VINYL TRIM LOWER / BAS	QR	GARNITURE DE VINYLE LOWER / BAS			N43960	NOVA BUS - LFS	
X			18	NOVA	N8888431	CLIP RETAINER TOP	32	ANCRAGE DE CLIP DESSUS			114879000	AMERICAN SEATING	
X			19	NOVA	N8888432	CLIP RETAINER	32	ANCRAGE DE CLIP			114880000	AMERICAN SEATING	

Sup.	Has Recom.?	Is Assy.?	Item #	MFG Code	Part #	Description	Qty.	French	Remarks	Internal No	Vendor No.	Vendor Name	Note / Text
			20	NOVA	12-102	SEE SEAT MID AXLE SECTION	1	VOIR SECTION SIEGE ESSIEU CENTRAL					
			21	NOVA	N8900712	PED CAP	4	BOUCHON PIEDESTAL			152627000	AMERICAN SEATING	
			22	NOVA	N45459	PLATE FLOOR TAPPING 100mm X 100mm	1	PLAQUE DE VISSAGE DE PLANCHER 100mm X 100mm			N45459	ESTAMPRO	
			23	NOVA	12-502	FOR SEAT FRAME SEE "REAR CROSS SEAT" SECTION	1	POUR LA STRUCTURE VOIR SECTION "SIEGE TRANS."					
			501	NOVA	N32989	SEALANT BUTYL 757	QR	SCELLANT BUTYL 757			#757 BUTYL(HBF)	MIN-CHEM CANADA INC.	
			502	NOVA	N72245	SEAT SET ASM	1	ENSEMBLE DE SIEGES ASS	§		N72245	OTACO	

§ FOR REFERENCE ONLY