12-602.182X4 - SEATING LAYOUT

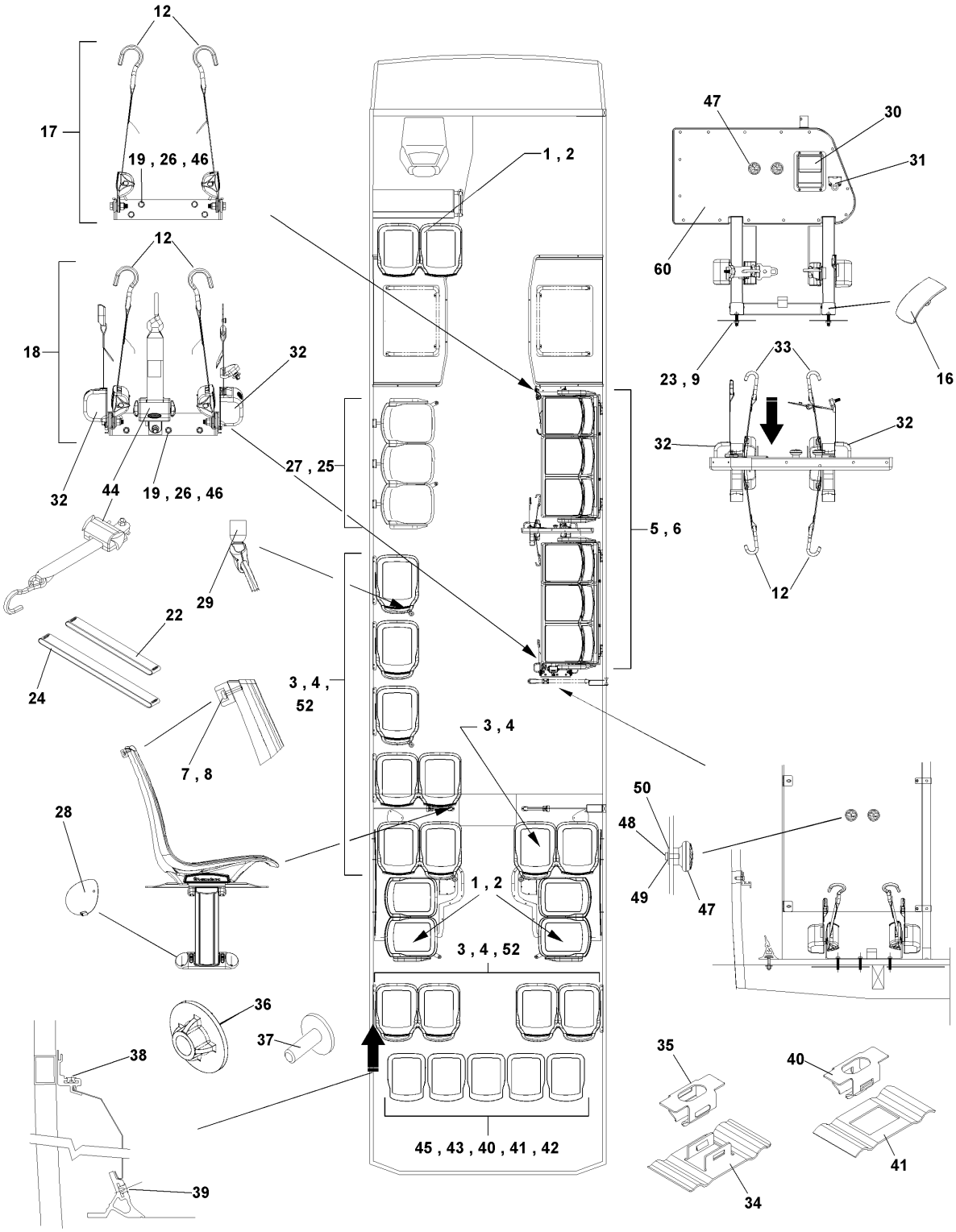

12-602.182X4 - SEATING LAYOUT

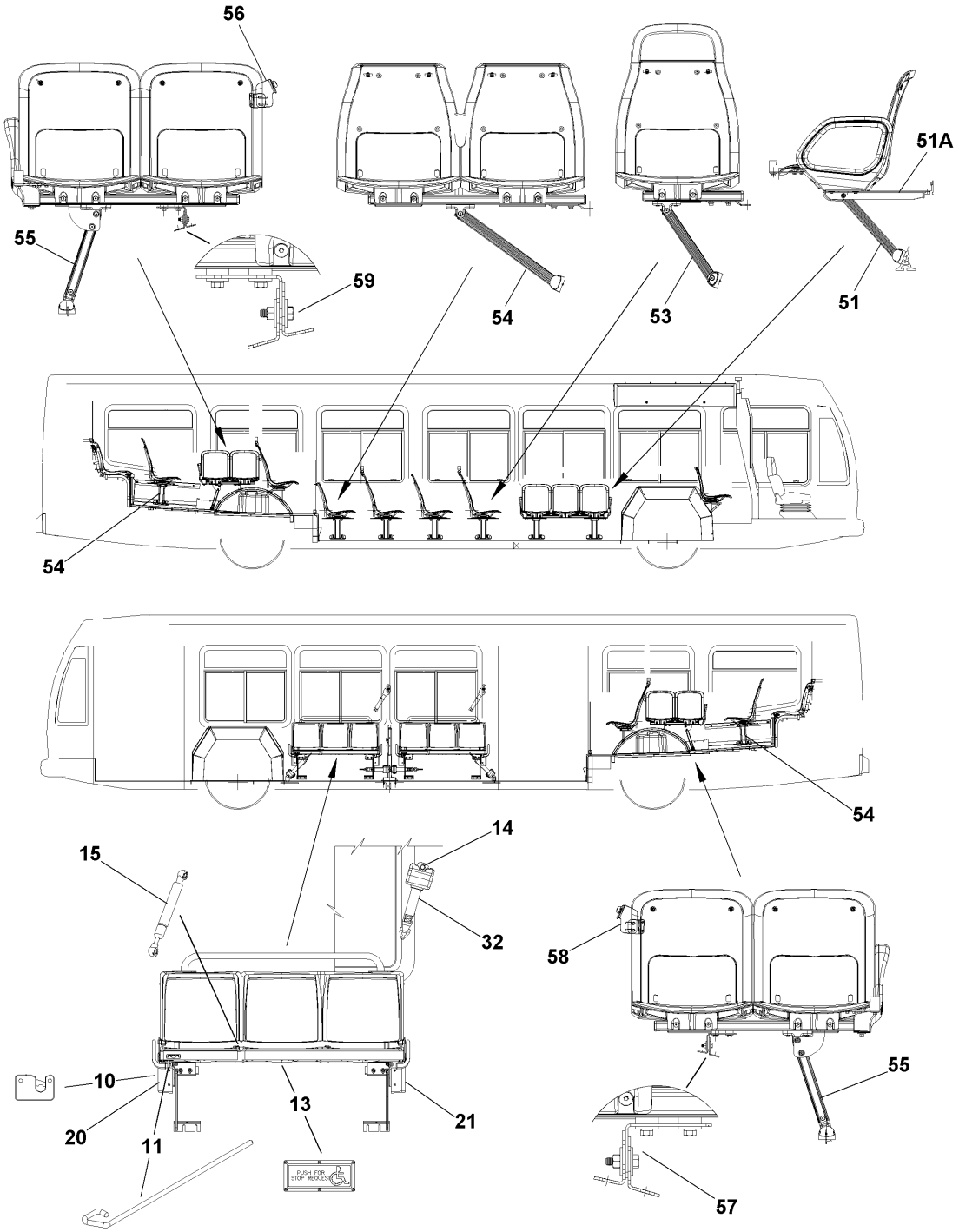

12-602.182X4 - SEATING LAYOUT

Sup.	Has Recom.?	Is Assy.?	Item #	MFG Code	Part #	Description	Qty.	French	Remarks	Internal No	Vendor No.	Vendor Name	Note / Text
			1	NOVA	N8901287	BACK INSERT INSIGHT	6	COUSSIN DE DOSSIER INSIGHT			1584651PNTFM	AMERICAN SEATING	
			_REF	NOVA	N8896771	_HOOK	2	. CROCHET			151419000	AMERICAN SEATING	
			_REF	NOVA	N8896772	_BOLT 10-32 X 3/16	2	. BOULON 10-32 X 3/16			151367000	AMERICAN SEATING	
			_REF	NOVA	N8896812	_SEAT INSERT CLIP PLUG STYLE	2	. ATTACHE COUSSIN DE SIEGE TYPE BOUCHON			153353201	AMERICAN SEATING	
			_REF	NOVA	N8880482	_WIDE FLANGE SCREW 10-32 X 5/16 LG	2	. VIS À ÉPAULEMENT LARGE 10-32 X 5/16 LG			084108000	AMERICAN SEATING	
			2	NOVA	N8902437	CUSHION INSERT ASM INSIGHT	6	COUSSIN DE FESSIER ASS INSIGHT			1584671PNUQJ	AMERICAN SEATING	
			_REF	NOVA	N8896771	_HOOK	2	. CROCHET			151419000	AMERICAN SEATING	
			_REF	NOVA	N8896772	_BOLT 10-32 X 3/16	2	. BOULON 10-32 X 3/16			151367000	AMERICAN SEATING	
			_REF	NOVA	N8896812	_SEAT INSERT CLIP PLUG STYLE	2	. ATTACHE COUSSIN DE SIEGE TYPE BOUCHON			153353201	AMERICAN SEATING	
			_REF	NOVA	N8880482	_WIDE FLANGE SCREW 10-32 X 5/16 LG	2	. VIS À ÉPAULEMENT LARGE 10-32 X 5/16 LG			084108000	AMERICAN SEATING	
			3	NOVA	N8901289	BACK INSERT INSIGHT	13	COUSSIN DE DOSSIER INSIGHT			1584640PNTFM	AMERICAN SEATING	
			_REF	NOVA	N8896771	_HOOK	2	. CROCHET			151419000	AMERICAN SEATING	
			_REF	NOVA	N8896772	_BOLT 10-32 X 3/16	2	. BOULON 10-32 X 3/16			151367000	AMERICAN SEATING	
			_REF	NOVA	N8896769	_STUD 0.697" LG BACK / DOSSIER	2	. GOUJON 0.697" LG BACK / DOSSIER			111759004	AMERICAN SEATING	
			4	NOVA	N8902438	CUSHION INSERT ASM INSIGHT	13	COUSSIN DE FESSIER ASS INSIGHT			1584661PNUQJ	AMERICAN SEATING	
			_REF	NOVA	N8896771	_HOOK	2	. CROCHET			151419000	AMERICAN SEATING	
			_REF	NOVA	N8896772	_BOLT 10-32 X 3/16	2	. BOULON 10-32 X 3/16			151367000	AMERICAN SEATING	
			_REF	NOVA	N8896812	_SEAT INSERT CLIP PLUG STYLE	2	. ATTACHE COUSSIN DE SIEGE TYPE BOUCHON			153353201	AMERICAN SEATING	
			_REF	NOVA	N8880482	_WIDE FLANGE SCREW 10-32 X 5/16 LG	2	. VIS À ÉPAULEMENT LARGE 10-32 X 5/16 LG			084108000	AMERICAN SEATING	
			5	NOVA	N8902428	BACK INSERT ASM 6468 F/U	6	COUSSIN DE DOSSIER ASS 6468 F/U			1545630030PNTBE	AMERICAN SEATING	
X			_REF	NOVA	N8883301	_WIDE FLANGE SCREW 10-32 X 5/16	2	. VIS À ÉPAULEMENT LARGE 10-32 X 5/16			084108-000	AMERICAN SEATING	
X			_REF	NOVA	N8882688	_STUD 0.91" LG	2	. GOUJON 0.91" LG			111759	AMERICAN SEATING	
			6	NOVA	N8902429	CUSHION INSERT ASM 6468 F/U	6	COUSSIN DE FESSIER ASS 6468 F/U			1570710010PNUXL	AMERICAN SEATING	
X			_REF	NOVA	N8882688	_STUD 0.91" LG	2	. GOUJON 0.91" LG			111759	AMERICAN SEATING	
X			_REF	NOVA	N8900219	_WIDE FLANGE SCREW 10-32 X 15/32	2	. VIS À ÉPAULEMENT LARGE 10-32 X 15/32			084108003	AMERICAN SEATING	
			7	NOVA	6940917	RUBBER BUMPER	1	BUTOIR CAOUTCHOUC			REC2098	ROBCO INC.	
			8	NOVA	449831	SCREW 10-24 X 1.00	1	VIS 10-24 X 1.00			STPPF010C0100Z	STANLEY	
			9	NOVA	N32989	SEALANT BUTYL 757	QR	SCELLANT BUTYL 757			#757 BUTYL(HBF)	MIN-CHEM CANADA INC.	
			10	NOVA	N8897379	ROD LATCH "LOCK UP"	2	LOQUET DE TIGE "LOCK UP"			146911000	AMERICAN SEATING	
			11	NOVA	N8902442	PULL ROD	2	TIRETTE			146840502	AMERICAN SEATING	
			12	NOVA	N8896671	WHEELCHAIR HOOK BELT	6	COURROIE AVEC CROCHET CHAISE ROULANTE			150711000	AMERICAN SEATING	
			13	NOVA	N8894711	TOUCH PAD ASM	2	BARRE POUSSOIR ARRET DEMANDE ASS			153131000	AMERICAN SEATING	
			14	NOVA	9985283	SEALANT BLUE TREAD LOCK	QR	SCELLANT BLEU			24231	ELECTRO SONIC INC.	
			15	NOVA	N8897100	GAS SPRING	4	RESSORT A GAZ			143432001	AMERICAN SEATING	
			16	NOVA	N8900216	PED CAP	4	BOUCHON PIEDESTAL			152627001	AMERICAN SEATING	
			17	NOVA	N71990-08	HOOK BELT & BRACKET ASM	1	CEINTURE CROCHET & SUPPORT ASS	#		161553	AMERICAN SEATING	
			18	NOVA	N71990-09	HOOK BELT & BRACKET ASM	1	CEINTURE CROCHET & SUPPORT ASS	##		161552	AMERICAN SEATING	
			19	NOVA	9429477	SCREW 3/8-16 X 2.00	7	VIS 3/8-16 X 2.00			9429477	METRICAN FASTENERS LTD.	
			20	NOVA	N8906072	TRIM COVER	1	COUVERCLE D'HABILLAGE			210068CL02RN1M	AMERICAN SEATING	
			21	NOVA	N8906071	TRIM COVER	1	COUVERCLE D'HABILLAGE			210068CL02LN1M	AMERICAN SEATING	
			22	NOVA	N8898993	LOOP, SCOOTER SECUREMENT 14.5"	2	SANGLE POUR SCOOTER 14.5"			150102000	AMERICAN SEATING	
			23	NOVA	N25253	TAPPING PLATE 148mm X 160mm	4	PLAQUE DE VISSAGE 148mm X 160mm			PRIMER 206 G+P	USINAGE LAURENTIDES INC.	

Sup.	Has Recom.?	Is Assy.?	Item #	MFG Code	Part #	Description	Qty.	French	Remarks	Internal No	Vendor No.	Vendor Name	Note / Text
			24	NOVA	N8902441	LOOP, SCOOTER SECUREMENT 18.5"	2	SANGLE POUR SCOOTER 18.5"			151991000	AMERICAN SEATING	
			25	NOVA	N8902427	BOTTOM ONSERT ASM INSIGHT	3	CONTOUR ASSISE ASM INSIGHT			1584671PNUXL	AMERICAN SEATING	
			_REF	NOVA	N8896771	_HOOK	2	. CROCHET			151419000	AMERICAN SEATING	
			_REF	NOVA	N8896772	_BOLT 10-32 X 3/16	2	. BOULON 10-32 X 3/16			151367000	AMERICAN SEATING	
			_REF	NOVA	N8896812	_SEAT INSERT CLIP PLUG STYLE	2	. ATTACHE COUSSIN DE SIEGE TYPE BOUCHON			153353201	AMERICAN SEATING	
			_REF	NOVA	N8880482	_WIDE FLANGE SCREW 10-32 X 5/16 LG	2	. VIS À ÉPAULEMENT LARGE 10-32 X 5/16 LG			084108000	AMERICAN SEATING	
			26	NOVA	N31510	WASHER FLAT 3/8	7	RONDELLE 3/8			51420 096 001	METRICAN FASTENERS LTD.	
			27	NOVA	N8902426	BACK INSERT ASM INSIGHT	3	COUSSIN DE DOSSIER ASS INSIGHT			1584651PNTBE	AMERICAN SEATING	
			_REF	NOVA	N8896771	_HOOK	2	. CROCHET			151419000	AMERICAN SEATING	
			_REF	NOVA	N8896772	_BOLT 10-32 X 3/16	2	. BOULON 10-32 X 3/16			151367000	AMERICAN SEATING	
			_REF	NOVA	N8896812	_SEAT INSERT CLIP PLUG STYLE	2	. ATTACHE COUSSIN DE SIEGE TYPE BOUCHON			153353201	AMERICAN SEATING	
			_REF	NOVA	N8880482	_WIDE FLANGE SCREW 10-32 X 5/16 LG	2	. VIS À ÉPAULEMENT LARGE 10-32 X 5/16 LG			084108000	AMERICAN SEATING	
			28	NOVA	N8898760	SPHERICAL PLASTIC CAP GRIS / GREY	20	CAPUCHON SPHERIQUE EN PLASTIQUE GRIS / GREY			150907000	AMERICAN SEATING	
			29	NOVA	N8897174	STANCHION CUP ASM INSIGHT	4	ANCRAGE DE POTEAU ASS. INSIGHT			152841100	AMERICAN SEATING	
X			_REF	NOVA	N8900141	_BUSHING STANCHION CUP 2 1/8" R0.06"	0	. COUSSINET D'ANCRAGE DE POTEAU 2 1/8" R0.06"			152837000	AMERICAN SEATING	
			_REF	NOVA	N8902928	_BUSHING STANCHION CUP 2 1/8" R0.10" rev.A 3/27/2015	1	. COUSSINET D'ANCRAGE DE POTEAU 2 1/8" R0.10" rev.A 3/27/2015			152837000	AMERICAN SEATING CO.	
			30	NOVA	N8897475	BELT RELEASE LATCH	2	LEVIER DE DECLENCHEMENT DES CEINTURES			139992500	AMERICAN SEATING	
			31	NOVA	N8898903	BUCKLE HOLDER	1	PORTE BOUCLE			149370000	AMERICAN SEATING	
			32	NOVA	N8901913	BELT ASM / LAP & SHOULDER	2	CEINTURE ASM / EPAULE ET HANCHE			159530000	AMERICAN SEATING	
			32	NOVA	N8901913	BELT ASM / LAP & SHOULDER	2	CEINTURE ASM / EPAULE ET HANCHE			159530000	AMERICAN SEATING	
			33	NOVA	N8896673	WHEELCHAIR HOOK BELT	2	COURROIE AVEC CROCHET CHAISE ROULANTE			150721000	AMERICAN SEATING	
			34	NOVA	N8895312	CLIP RETAINER TAB INSIGHT	QR	LANGUETTE DE RETENUE INSIGHT			150793000	AMERICAN SEATING	
			35	NOVA	N8895368	CLIP SPRING INSIGHT	QR	ATTACHE RESSORT INSIGHT			150792000	AMERICAN SEATING	
			36	NOVA	N8896812	SEAT INSERT CLIP PLUG STYLE	QR	ATTACHE COUSSIN DE SIEGE TYPE BOUCHON			153353201	AMERICAN SEATING	
X			37	NOVA	N8883301	WIDE FLANGE SCREW 10-32 X 5/16	QR	VIS À ÉPAULEMENT LARGE 10-32 X 5/16			084108-000	AMERICAN SEATING	
			38	NOVA	N24490	VINYL EXTRUSION UPPER / HAUT	QR	EXTRUSION DE CAOUTCHOUC UPPER / HAUT			2526-1	CHARDON RUBBER CO.	
			39	NOVA	N43960	VINYL TRIM LOWER / BAS	QR	GARNITURE DE VINYLE LOWER / BAS			N43960	NOVA BUS - LFS	
X			40	NOVA	N8888431	CLIP RETAINER TOP	20	ANCRAGE DE CLIP DESSUS			114879000	AMERICAN SEATING	
X			41	NOVA	N8888432	CLIP RETAINER	20	ANCRAGE DE CLIP			114880000	AMERICAN SEATING	
			42	NOVA	12-532	FOR SEAT FRAME SEE "REAR CROSS SEAT" SECTION	1	POUR LA STRUCTURE VOIR SECTION "SIEGE TRANS."					
			43	NOVA	N8902905	BOTTOM INSERT	5	COUSSIN DE FESSIER			1584673PNUQJ	AMERICAN SEATING CO.	
			44	NOVA	N8896670	FLOOR BELT WITH HOOK / AVEC CROCHET	2	COURROIE AU PLANCHER WITH HOOK / AVEC CROCHET			150716000	AMERICAN SEATING	
			45	NOVA	N8902904	BACK INSERT	5	COUSSIN DE DOSSIER			1584653PNTFM	AMERICAN SEATING	
			46	NOVA	N31509	LOCK WASHER 3/8"	7	RONDELLE D'ARRÊT 3/8"			51450 096 001	METRICAN FASTENERS LTD.	
X			47	NOVA	19514142	KNOB-HOOK HANGER	4	ATTACHE POMMEAU-CROCHET			149369000	AMERICAN SEATING CO	
			48	NOVA	N8907539	BOLT CRT SS 5/16-18 X 3/4	2	BOULON CRT SS 5/16-18 X 3/4			5660501201	AMERICAN SEATING CO	
			49	NOVA	N8907540	WASHER LOCK 5/16 SS	2	RONDELLE D'ARRET 5/16 SS			72405091301	AMERICAN SEATING CO	
			50	NOVA	N8907541	WASHER 11/32 X 1-1/16 X 11	2	RONDELLE 11/32 X 1-1/16 X 11			7320F171101	AMERICAN SEATING CO	
			51	NOVA	N8907575	CANTILEVER ASY 1P LON INSIGHT	2	PORTE A FAUX ASS. 1P LON INSIGHT			157248703	AMERICAN SEATING	
			_A	NOVA	N8907574	_BRACKET CANT UPR SS 2172STNLS	1	. SUPPORT CANT. HAUT INOX 2172STNLS			157249704	AMERICAN SEATING	
			52	NOVA	N8908796	BACK PANEL, PLASTIC	13	PANNEAU ARRIERE DE PLASTIQUE			21023201N9M	AMERICAN SEATING	
		X	53	NOVA	N8906303	SINGLE CANTILEVER	3	PORTE A FAUX SIMPLE			157224007	AMERICAN SEATING	
		X	54	NOVA	N8906851	CANTILEVER LEG ASM 2P TR CANT	3	PATTE CANTILEVER ASS 2P TR CANT			157224000	AMERICAN SEATING	

Sup.	Has Recom.?	Is Assy.?	Item #	MFG Code	Part #	Description	Qty.	French	Remarks	Internal No	Vendor No.	Vendor Name	Note / Text
			55	NOVA	N8909032	LEG ASM INSIGHT	2	PATTE ASM INSIGHT			151102002	AMERICAN SEATING CO.	
			56	NOVA	N8909033	BRACKET, UPPER BACK	1	SUPPORT SUPERIEUR DE DOSSIER			160386001	AMERICAN SEATING CO.	
			57	NOVA	N8909034	BRACKET ASM, W/H	1	SUPPORT ASS DE LOGEMENT DE ROUE			161898R	AMERICAN SEATING CO.	
			58	NOVA	N8909035	BRACKET, UPPER BACK	1	SUPPORT SUPERIEUR DE DOSSIER			160386000	AMERICAN SEATING CO.	
			59	NOVA	N8909036	BRACKET ASM, W/H	1	SUPPORT ASS DE LOGEMENT DE ROUE			161898L	AMERICAN SEATING CO.	
			60	NOVA	N8910733	BACK PANEL	1	PANNEAU ARRIERE			210071NM45LN9L	AMERICAN SEATING	
			501	NOVA	N60981	FOAM TAPE NEOPRENE 11/16" W X 1/4" T	QR	RUBAN MOUSSE NEOPRENE 11/16" W X 1/4" T			30418GSA 900 900	LES INDUSTRIES PRO-TAC INC.	
			502	NOVA	N71990	SEAT SET INSIGHT, 33 PASS.		ENSEMBLE DE SIEGES INSIGHT, 33 PASS.	§		N71990	AMERICAN SEATING CO.	
			503	NOVA	N8915002	MOD LON W/HOLES	1	MOD LON W/HOLES			21023192A9L	AMERICAN SEATING CO	

ITEM 12 IS PART OF ITEM 17

ITEMS 12 & 32 ARE PART OF ITEM18

§ FOR REFERENCE ONLY