12-650.85X4 - SEATING LAYOUT

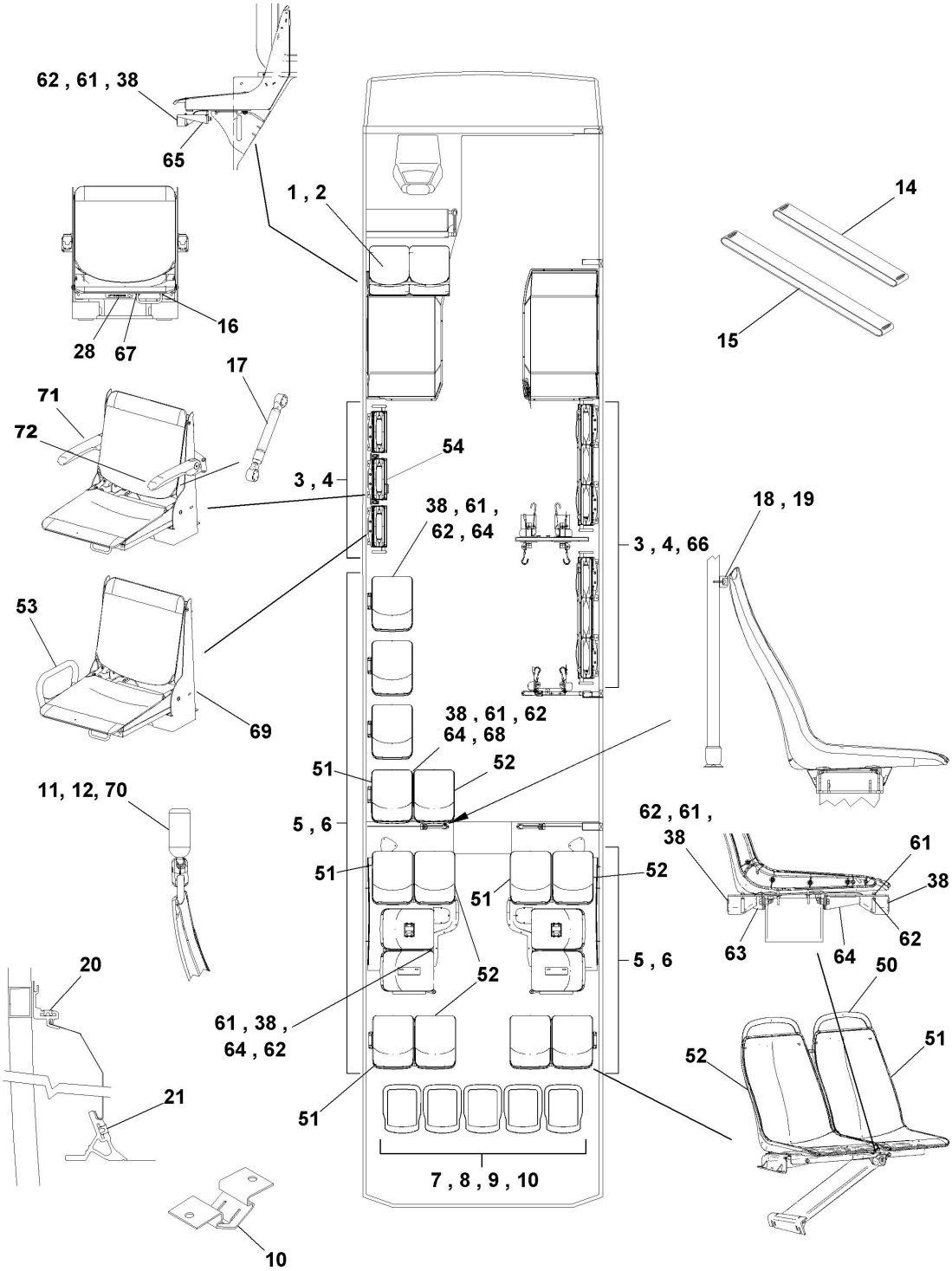

12-650.85X4 - SEATING LAYOUT

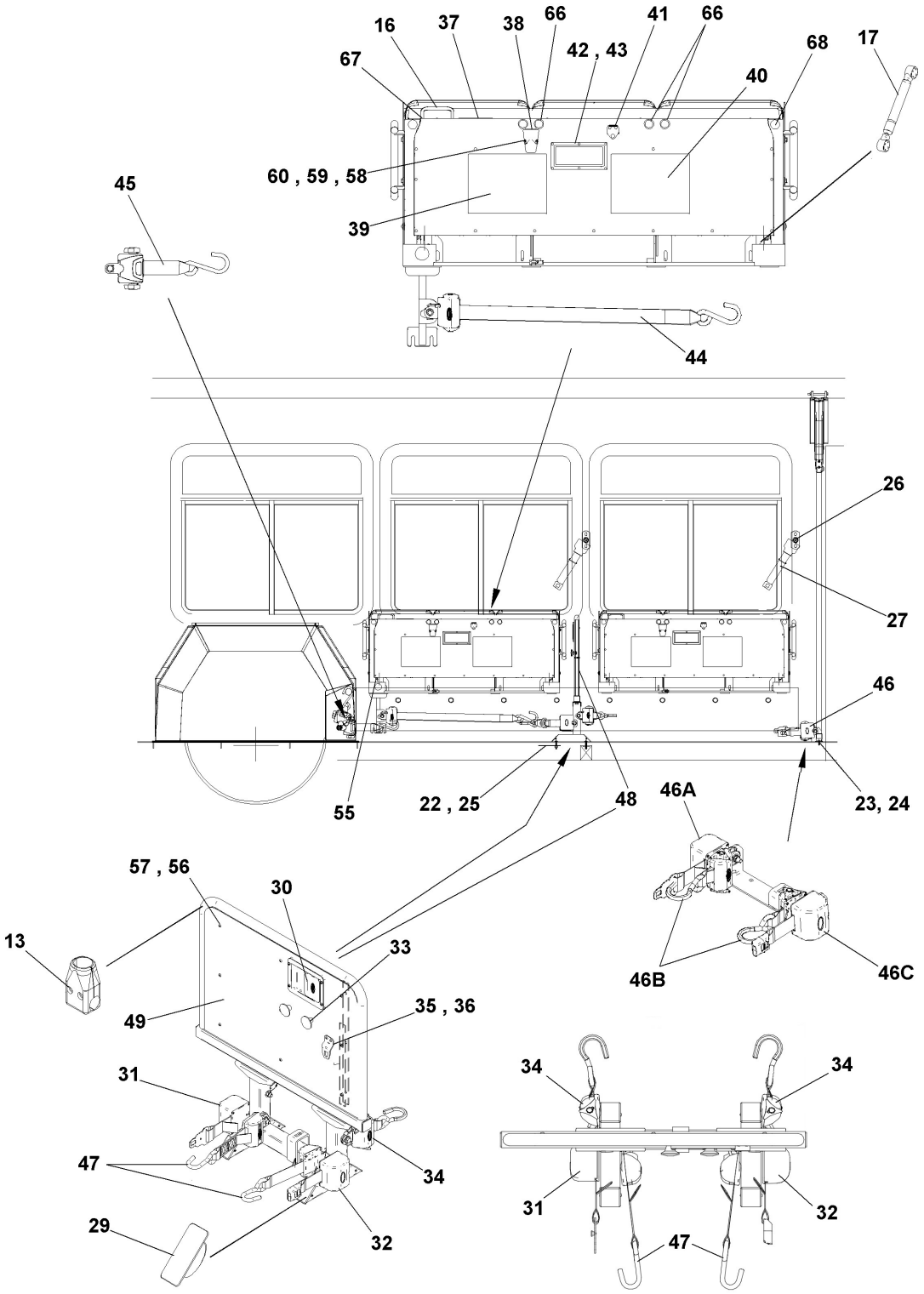

12-650.85X4 - SEATING LAYOUT

Sup.	Has Recom.?	Is Assy.?	Item #	MFG Code	Part #	Description	Qty.	French	Remarks	Internal No	Vendor No.	Vendor Name	Note / Text
			1	NOVA	N8908797	CUSHION INSERT ASM GEMINI	2	COUSSIN DE FESSIER ASS GEMINI			58NHF5-09-RMOV	USSC / FREEDMAN / 4ONE LLC	
			_REF	NOVA	N8901383	_HOOK CLIP PLASTIC , LH / PLASTIQUE , GA	1	. CROCHET PLASTIC , LH / PLASTIQUE , GA			58291012-2N	USSC	
			_REF	NOVA	N8901384	_HOOK CLIP PLASTIC , RH / PLASTIQUE , DR	1	. CROCHET PLASTIC , RH / PLASTIQUE , DR			58291011-2N	USSC	
			2	NOVA	N8908798	BACK INSERT ASM GEMINI	2	COUSSIN DE DOSSIER ASS GEMINI			582TF0-9L-RMOV	USSC / FREEDMAN / 4ONE LLC	
			3	NOVA	N8908799	CUSHION INSERT ASM GEMINI	9	COUSSIN DE FESSIER ASS GEMINI			58NHF5-13-RMOV	USSC / FREEDMAN / 4ONE LLC	
			_REF	NOVA	N8901383	_HOOK CLIP PLASTIC , LH / PLASTIQUE , GA	1	. CROCHET PLASTIC , LH / PLASTIQUE , GA			58291012-2N	USSC	
			_REF	NOVA	N8901384	_HOOK CLIP PLASTIC , RH / PLASTIQUE , DR	1	. CROCHET PLASTIC , RH / PLASTIQUE , DR			58291011-2N	USSC	
			4	NOVA	N8908800	BACK INSERT ASM GEMINI	9	COUSSIN DE DOSSIER ASS GEMINI			582TF0-ST-RMOV	USSC / FREEDMAN / 4ONE LLC	
			5	NOVA	N8908801	CUSHION INSERT ASM GEMINI	17	COUSSIN DE FESSIER ASS GEMINI			5823F5-09-RMOV	USSC / FREEDMAN / 4ONE LLC	
			_REF	NOVA	N8901383	_HOOK CLIP PLASTIC , LH / PLASTIQUE , GA	1	. CROCHET PLASTIC , LH / PLASTIQUE , GA			58291012-2N	USSC	
			_REF	NOVA	N8901384	_HOOK CLIP PLASTIC , RH / PLASTIQUE , DR	1	. CROCHET PLASTIC , RH / PLASTIQUE , DR			58291011-2N	USSC	
			6	NOVA	N8908802	BACK INSERT ASM GEMINI	17	COUSSIN DE DOSSIER ASS GEMINI			58N4F0-9L-RMOV	USSC / FREEDMAN / 4ONE LLC	
			7	NOVA	N8908803	CUSHION INSERT ASM NOVA	5	COUSSIN DE FESSIER ASS NOVA			5N2395-09-RMOV	USSC / FREEDMAN / 4ONE LLC	
			_REF	NOVA	N8898424	_QUICK RELEASE STUD 10-32 x 1"	2	. GOUJON ASSEMBLAGE RAPIDE 10-32 x 1"			99221	USSC / FREEDMAN / 4ONE LLC	
			_REF	NOVA	N8898423	_HOOK	2	. CROCHET			72898	USSC / FREEDMAN / 4ONE LLC	
			_REF	NOVA	N8898425	_MACHINE SCREW 10-32 x 1/4"	2	. VIS MECANIQUE 10-32 x 1/4"			99701	USSC / FREEDMAN / 4ONE LLC	
			_REF	NOVA	N8899407	_TUBE 3/8 OD, 3/16 ID, 1/8 LG	2	. TUBEDISCHARGE, BULKHEAD TO TEE 3/8 OD, 3/16 ID, 1/8 LG			99717	USSC / FREEDMAN / 4ONE LLC	
			8	NOVA	N8908804	BACK INSERT ASM NOVA	5	COUSSIN DE DOSSIER ASS NOVA			5N2490-9L-RMOV	USSC / FREEDMAN / 4ONE LLC	
			_REF	NOVA	N8898424	_QUICK RELEASE STUD 10-32 x 1"	2	. GOUJON ASSEMBLAGE RAPIDE 10-32 x 1"			99221	USSC / FREEDMAN / 4ONE LLC	
			_REF	NOVA	N8898423	_HOOK	2	. CROCHET			72898	USSC / FREEDMAN / 4ONE LLC	
			_REF	NOVA	N8898425	_MACHINE SCREW 10-32 x 1/4"	2	. VIS MECANIQUE 10-32 x 1/4"			99701	USSC / FREEDMAN / 4ONE LLC	
			_REF	NOVA	N8898422	_WASHER #10	2	. RONDELLE #10			9906-000060-000	USSC / FREEDMAN / 4ONE LLC	
			9	NOVA	12-532	FOR SEAT FRAME SEE "REAR CROSS SEAT" SECTION		POUR LA STRUCTURE VOIR SECTION "SIEGE TRANS."					
			10	NOVA	N64401	RETAINER CLIP SEAT INSERT USSC	20	ATTACHE POUR INSERT DE SIEGE USSC			74147	USSC / FREEDMAN / 4ONE LLC	
			11	NOVA	N8901409	STANCHION CUP GEMINI STREET SIDE	3	ANCRAGE DE POTEAU GEMINI STREET SIDE			58245127-A5	USSC	
			_REF	NOVA	N8909030	_STANCHION CUP,KIT,8M, ALUM, 4",SS WITHOUT INSERT / SANS INSERT	1	. ENS. ANCRAGE DE POTEAU, ALUM. 4" SS WITHOUT INSERT / SANS INSERT			58245126-A5	USSC	
			_REF	NOVA	N8908521	_CUP-INSERT,RUBBER 8M - 4"H - BLK	1	. INSERT EN CAOUTCHOUC 8M - 4"H - BLK			32924-NN	USSC - 4-ONE	
			12	NOVA	N8904196	STANCHION CUP GEMINI CURB SIDE/COTE TROTTOIR	1	ANCRAGE DE POTEAU GEMINI CURB SIDE/COTE TROTTOIR			58245128-A5	USSC / FREEDMAN / 4ONE LLC	
			13	NOVA	N8897558	STANCHION CLAMP BARRIER	1	BRIDE DE POTEAU BARRIER			50306012-95	USSC / FREEDMAN / 4ONE LLC	
X			14	NOVA	19508107	LOOP WEBBING BLUE 14"	2	BOUCLE DE SANGLE BLEU 14"			Q5-7580	Q'STRAINT	
			15	NOVA	19401523	WEBBING LOOP 18"	2	BOUCLE DE SANGLE 18"			Q5-7580-4	Q'STRAINT	
			16	NOVA	N8897260	SPRING HANDLE RETURN	5	RESSORT DE RAPPEL DE POIGNEE			50307003	USSC / FREEDMAN / 4ONE LLC	
			16	NOVA	N8897260	SPRING HANDLE RETURN	5	RESSORT DE RAPPEL DE POIGNEE			50307003	USSC / FREEDMAN / 4ONE LLC	
			17	NOVA	N8902316	GAS SPRING	7	RESSORT A GAZ			43616	USSC / FREEDMAN / 4ONE LLC	
			17	NOVA	N8902316	GAS SPRING	7	RESSORT A GAZ			43616	USSC / FREEDMAN / 4ONE LLC	
			18	NOVA	6940917	RUBBER BUMPER	1	BUTOIR CAOUTCHOUC			REC2098	ROBCO INC.	
			19	NOVA	449831	SCREW 10-24 X 1.00	1	VIS 10-24 X 1.00			STPPF010C0100Z	STANLEY	
			20	NOVA	N24490	VINYL EXTRUSION UPPER / HAUT	QR	EXTRUSION DE CAOUTCHOUC UPPER / HAUT			2526-1	CHARDON RUBBER CO.	
			21	NOVA	N43960	VINYL TRIM LOWER / BAS	QR	GARNITURE DE VINYLE LOWER / BAS			N43960	NOVA BUS - LFS	
			22	NOVA	N25253	TAPPING PLATE 148mm X 160mm	2	PLAQUE DE VISSAGE 148mm X 160mm			PRIMER 206 G+P	USINAGE LAURENTIDES INC.	
			23	NOVA	9429477	SCREW 3/8-16 X 2.00	3	VIS 3/8-16 X 2.00			9429477	METRICAN FASTENERS LTD.	
			24	NOVA	N31510	WASHER FLAT 3/8	3	RONDELLE 3/8			51420 096 001	METRICAN FASTENERS LTD.	
			25	NOVA	N32989	SEALANT BUTYL 757	QR	SCELLANT BUTYL 757			#757 BUTYL(HBF)	MIN-CHEM CANADA INC.	

Sup.	Has Recom.?	Is Assy.?	Item #	MFG Code	Part #	Description	Qty.	French	Remarks	Internal No	Vendor No.	Vendor Name	Note / Text
			26	NOVA	9985283	SEALANT BLUE TREAD LOCK	QR	SCELLANT BLEU			24231	ELECTRO SONIC INC.	
			27	NOVA	861931	RETRACTABLE SHOULDER BELT	2	CEINTURE D'EPAULE RETRACTABLE			Q5-6415-RET	Q'STRAINT	
			28	NOVA	N8908475	ALUMINUM PLATE "LIFT TO RELEASE " RH	3	PLAQUE ALUMINIUM "LIFT TO RELEASE " RH			72440	USSC / FREEDMAN / 4ONE LLC	
			29	NOVA	N8896595	LEG CAP	4	CAPUCHON DE PATTE			56358	USSC / FREEDMAN / 4ONE LLC	
			30	NOVA	N8899601	PADDLE HANDLE	1	POIGNEE A PALETTE			Q8-6301-PH	Q-STRAINT	
			31	NOVA	N8896681	BELT 2 POINT MALE	1	CEINTURE 2 POINTS MALE			56372	USSC / FREEDMAN / 4ONE LLC	
			32	NOVA	N8895842	BELT 2 POINT FEMALE	1	CEINTURE 2 POINTS FEMELLE			56242	USSC / FREEDMAN / 4ONE LLC	
			33	NOVA	N8908794	KNOB, BELT HOOK STORAGE	2	POIGNEE DE RANGEMENT DE CEINTURE			91773	USSC / FREEDMAN / 4ONE LLC	
			34	NOVA	N8897567	WHEELCHAIR HOOK BELT	2	COURROIE AVEC CROCHET CHAISE ROULANTE			56884	USSC / FREEDMAN / 4ONE LLC	
			35	NOVA	N8908795	BELT BUCKLE	1	BOUCLE DE CEINTURE			92366	USSC / FREEDMAN / 4ONE LLC	
			36	NOVA	N8905405	BLIND RIVET 3/16 X 0.620 MULTI GRIP, ZP	2	RIVET BORGNE 3/16 X 0.620 MULTI GRIP, ZP			99176	USSC / FREEDMAN / 4ONE LLC	
			37	NOVA	N8908474	ALUMINUM PLATE "LIFT TO RELEASE " LH	2	PLAQUE ALUMINIUM "LIFT TO RELEASE " LH			72441	USSC / FREEDMAN / 4ONE LLC	
X			38	NOVA	N93715	USB PORT ASM	10	PORT USB ASS			7-742-106	FORSTER INSTRUMENTS LTD	
X			38	NOVA	N93715	USB PORT ASM	10	PORT USB ASS			7-742-106	FORSTER INSTRUMENTS LTD	
X			_REF	NOVA	N86106	_USB CHARGER 2 X 2.1A	1	. CHARGEUR USB 2 X 2.1A			7-742-086	FORSTER INSTRUMENTS LTD	
X			39	NOVA	19519015	DECAL, W/C SECUREMENT INST	2	DECALQUE INSTRUCTION DE SECURITE CHAISE ROUL.			56820	USSC / FREEDMAN / 4ONE LLC	
			40	NOVA	N8908806	INSTRUCTION PLATE, FRENCH ONLY	2	PLAQUE D'INSTRUCTION, FRANCAIS SEULEMENT			89864	USSC / FREEDMAN / 4ONE LLC	
			41	NOVA	19517395	PIN, CONNECTOR RESTRAINT	2	TENON, CONNECTEUR DE SYST. D'ANCRAGE			56828	USSC / FREEDMAN / 4ONE LLC	
			42	NOVA	N8905654	RIVET 5/32" / .099-.177" BLIND SS	12	RIVET 5/32" / .099-.177" BLIND SS			65A01601	USSC / FREEDMAN / 4ONE LLC	
			43	NOVA	N8902372	TOUCH PAD WITH SYMBOL/AVEC SYMBOLE	2	PANNEAU DE TOUCHE WITH SYMBOL/AVEC SYMBOLE			91076	USSC / FREEDMAN / 4ONE LLC	
			44	NOVA	N8908807	RETRACTOR	2	RETRACTEUR DE CEINTURE			92377	USSC / FREEDMAN / 4ONE LLC	
			45	NOVA	N8908808	WHEELCHAIR HOOK BELT, WHEELHOUSE KIT	1	COURROIE A/ CROCHET CHAISE ROUL.,LOG. DE ROUE			92378-0K	USSC / FREEDMAN / 4ONE LLC	
			_REF	NOVA	N8908807	_RETRACTOR	1	. RETRACTEUR DE CEINTURE			92377	USSC / FREEDMAN / 4ONE LLC	
			_REF	NOVA	N8897291	_SAFETY BOLT 7/16-20 1"LG	1	. BOULON DE SECURITÉ 7/16-20 1"LG			73086	USSC / FREEDMAN / 4ONE LLC	
			_REF	NOVA	N8910040	_WASHER .562X1 NYL	2	. RONDELLE .562X1 NYL			Q8-6562-2	Q'STRAINT	
			46	NOVA	N8908809	RESTRAINT KIT W/ BRACKET	1	ENSEMBLE D'ATTACHE ET SUPPORT			91759-0K-12SA	USSC / FREEDMAN / 4ONE LLC	
			_A	NOVA	N8896681	_BELT 2 POINT MALE	1	. CEINTURE 2 POINTS MALE			56372	USSC / FREEDMAN / 4ONE LLC	
			_B	NOVA	N8897567	_WHEELCHAIR HOOK BELT	2	. COURROIE AVEC CROCHET CHAISE ROULANTE			56884	USSC / FREEDMAN / 4ONE LLC	
			_C	NOVA	N8895842	_BELT 2 POINT FEMALE	1	. CEINTURE 2 POINTS FEMELLE			56242	USSC / FREEDMAN / 4ONE LLC	
			47	NOVA	N8896683	WHEELCHAIR BELT WITH CABLE	2	COURROIE CHAISE ROULANTE AVEC CABLE			51311057-NN	USSC / FREEDMAN / 4ONE LLC	
			48	NOVA	N8909042	PANEL BACK BARRIER	1	PANNEAU ARR. DE BARRIERE			47206	USSC / FREEDMAN / 4ONE LLC	
			49	NOVA	N8909066	PANNEL BARRIER, FRONT	1	PANNEAU DE BARRIERE, AV.			92106-F7	USSC / FREEDMAN / 4ONE LLC	
			50	NOVA	N8909072	GRAB HANDLE	9	POIGNEE D'ASSISTANCE			58291006-F7	USSC / FREEDMAN / 4ONE LLC	
			51	NOVA	N8909073	SEAT SHELL	7	COQUILLE DE SIÈGE			58291036-F7-NN	USSC / FREEDMAN / 4ONE LLC	
			52	NOVA	N8909074	SEAT SHELL	7	COQUILLE DE SIÈGE			58291035-F7-NN	USSC / FREEDMAN / 4ONE LLC	
			53	NOVA	N8910031	ARMREST ASSY, OPEN, SLIM FLIP	6	APPUI BRAS ASS.			89219-02SA	USSC / FREEDMAN / 4ONE LLC	
			54	NOVA	N78613-03	SEAT ASM 1P LONGI. FLIP-UP	1	SIEGE 1 PASS., LONGI. PLIANT			92105-58LKNN-17-513-RMOV	USSC / FREEDMAN / 4ONE LLC	
			_REF	NOVA	N8910280	_PLATE LINKAGE	2	. LIEN PLAT			72631-0K	USSC	
			_REF	NOVA	N8950039	_BUSHING NYLON	1	. COUSSINET NYLON			53517-HN	USSC - UNITED STATE SEATING CO.	
			55	NOVA	N8909272	LOCK GUIDE PLATE	1	PLAQUE GUIDE DE BARRURE			55764-0N	USSC/FREEDMAN/4ONE LLC	
			56	NOVA	N8910055	SCREW, TORX 10-24 X 3/4, BLACK ZP	9	VIS, TORX 10-24 X 3/4, NOIR ZP			99404	USSC / FREEDMAN / 4ONE LLC	
			57	NOVA	N8910056	SLEEVE NUT, PHILLIPS 10-24 X 5/8, BLACK ZP	9	ECROU DOUILLE, PHILLIPS 10-24 X 5/8, NOIR ZP			99405	USSC / FREEDMAN / 4ONE LLC	
			58	NOVA	N8909581	NUT HEX 8-32	4	ECROU HEX 8-32			99739	USSC / FREEDMAN / 4ONE LLC	
			59	NOVA	N8910222	WASHER #8 FLAP, SAE, ZP	4	RONDELLE #8 FLAP, SAE, ZP			9904-000034-007	USSC / FREEDMAN / 4ONE LLC	

Sup.	Has Recom.?	Is Assy.?	Item #	MFG Code	Part #	Description	Qty.	French	Remarks	Internal No	Vendor No.	Vendor Name	Note / Text
			60	NOVA	N8909580	SCREW PAN HEAD #8-32UNC x 3/4"	4	VIS TETE CYLINDRIQUE #8-32UNC x 3/4"			10098	USSC / FREEDMAN / 4ONE LLC	
			61	NOVA	N8909575	ACORN NUT 8-32	16	ECROU BORGNE 8-32			99501	USSC / FREEDMAN / 4ONE LLC	
			62	NOVA	N8893633	SCREW 8-32 X 1/2"	16	VIS 8-32 X 1/2"			5307005	USSC / FREEDMAN / 4ONE LLC	
			63	NOVA	N8909578	BRACKET USB	2	SUPPORT USB			92498-0X	USSC / FREEDMAN / 4ONE LLC	
			64	NOVA	N8909579	BRACKET USB	5	SUPPORT USB			92535-0X	USSC / FREEDMAN / 4ONE LLC	
			65	NOVA	N8909574	BRACKET USB	1	SUPPORT USB			92500-0X	USSC / FREEDMAN / 4ONE LLC	
			66	NOVA	N8909801	RUBBER PLUG 1" BLACK/NOIR	QR	BOUCHON DE CAOUTCHOUC 1" BLACK/NOIR			22342	USSC / FREEDMAN / 4ONE LLC	
			66	NOVA	N8909801	RUBBER PLUG 1" BLACK/NOIR	QR	BOUCHON DE CAOUTCHOUC 1" BLACK/NOIR			22342	USSC / FREEDMAN / 4ONE LLC	
			67	NOVA	N8910546	BEARING CLIP 3/8" OD	QR	BAGUE DE RETENUE 3/8" OD			70576	USSC / FREEDMAN / 4ONE LLC	
			67	NOVA	N8910546	BEARING CLIP 3/8" OD	QR	BAGUE DE RETENUE 3/8" OD			70576	USSC / FREEDMAN / 4ONE LLC	
			68	NOVA	N8910658	PLUG, BLACK 1.08" ID	8	BOUCHON NOIR 1.08" ID			99966	USSC / FREEDMAN / 4ONE LLC	
			68	NOVA	N8910658	PLUG, BLACK 1.08" ID	8	BOUCHON NOIR 1.08" ID			99966	USSC / FREEDMAN / 4ONE LLC	
			69	NOVA	N78613-04	L.H. LONGITUDINAL FLIP-UP SEAT	1	SIEGE RABATABLE LONGITUDINAL GA			92107-58LKNN-17-513-RMOV	USSC / FREEDMAN / 4ONE LLC	
			_REF	NOVA	N8910031	_ARMREST ASSY, OPEN, SLIM FLIP	1	. APPUI BRAS ASS.			89219-02SA	USSC / FREEDMAN / 4ONE LLC	
			70	NOVA	N8909854	SCREW BUTN HD,SOKT,M6-1.0X25	QR	VIS BUTN HD,SOKT,M6-1.0X25			61M00621	USSC / FREEDMAN / 4ONE LLC	
			71	NOVA	N8915818	ARM ASS LH,7012(GRY)+PRIMER,BLK	1	BRAS ASM LH,7012(GRY)+PRIMER,BLK			93252-17A-BLK	USSC	
			72	NOVA	N8915819	ARM ASS HDT,4MSLIM,RH,7012+PRMR,BLK	1	BRAS ASM HDT,4MSLIM,RH,7012+PRMR,BLK			93248-17A-BLK	USSC	
			501	NOVA	N78613	SEAT SET ASM	1	ENSEMBLE DE SIEGES ASS	§		N78613	USSC / FREEDMAN / 4ONE LLC	
			502	NOVA	N8951952	EXTRUSION	1	PROFILE			150776002	AMERICAN SEATING CO	

§ FOR REFERENCE ONLY IF A COMPLETE SEAT IS NEEDED , CALL ORDER DESK