Top View

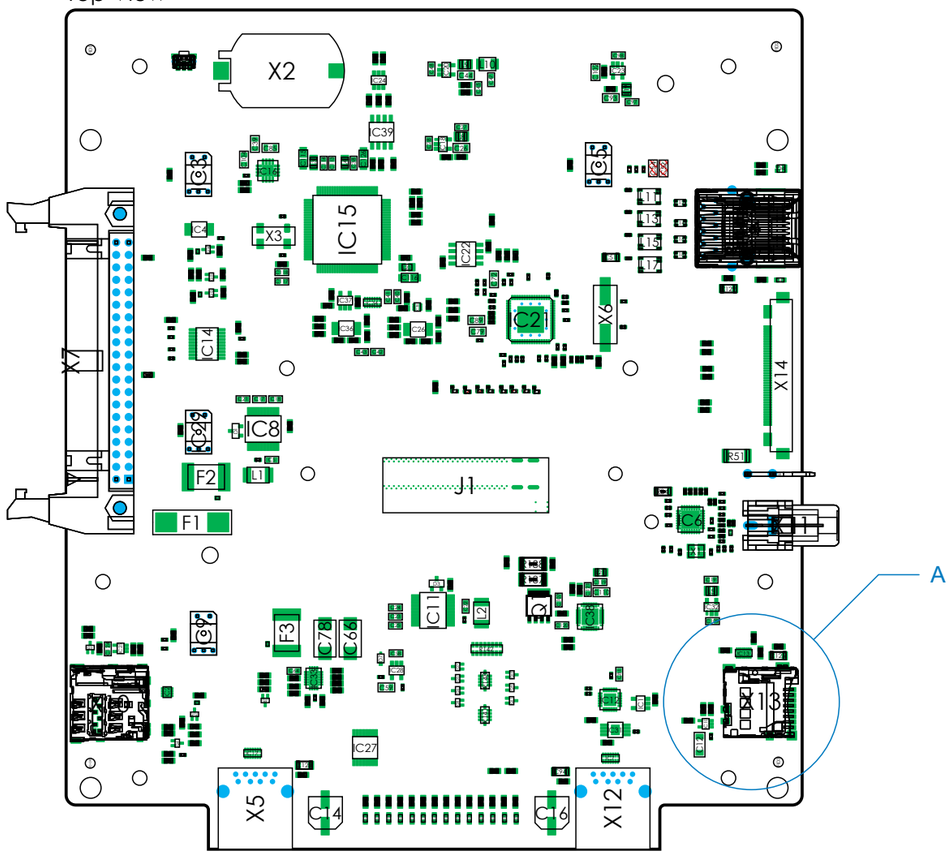


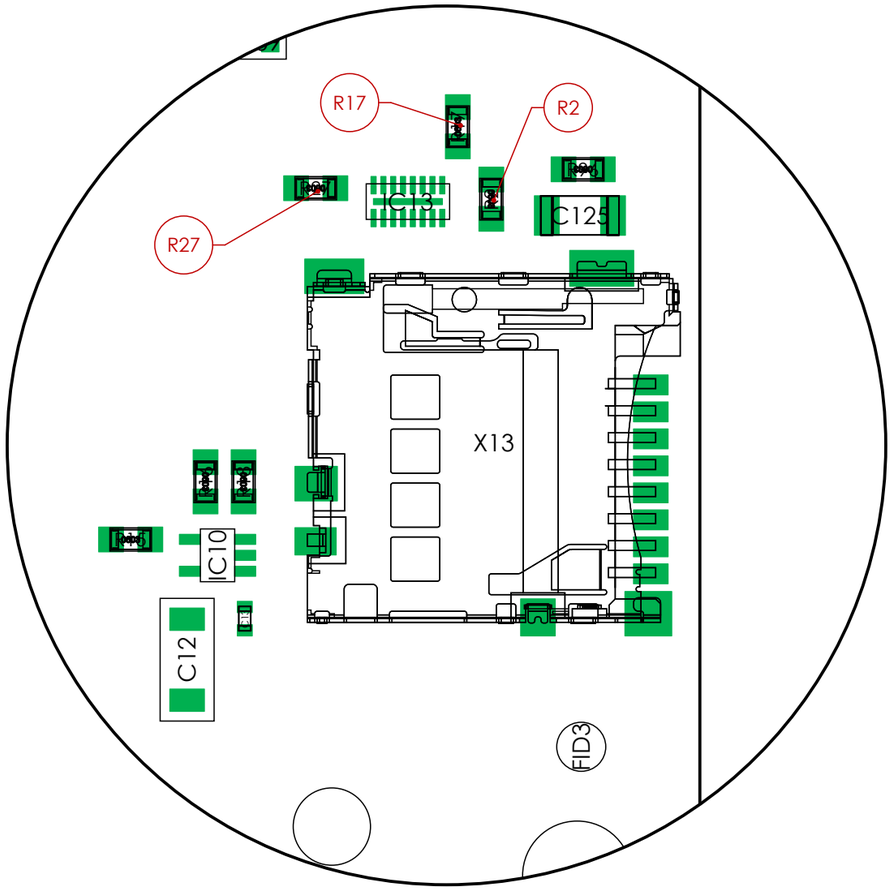


DETAIL A (Scale 4:1)

Assembly:

1. - PCB-Assembly in order of IPC-A-610-*, CLASS 2
2. - Complete AOI-Test of assembled board required!
3. - Clean complete assembled board twice, be aware of absolute clean and flux-free surface
4. - Use gloves for direct board contact after cleaning
5. - PCB assembly in order of ESD-Rules DIN EN 61340-5-1 und -2
6. - Consider mechanical assembly hints for Yamaichi sockets
7. - Assemble Yamaichi sockets only on dust-free surface and landing pads

| | | | | | | |
|---|---|---|---|---|---|---|
| UNLESS OTHERWISE SPECIFIED: DIMENSIONS ARE IN MILLIMETERS SURFACE FINISH: TOLERANCES: LINEAR: ANGULAR: | FINISH: | | | DEBURR AND BREAK SHARP EDGES | DO NOT SCALE DRAWING | REVISION |
| | | | | | Yamaichi Electronics Deutshland GmbH | |
| | NAME | SIGNATURE | DATA | | TITLE: | |
| DRAW | STO | | | | BLT/SLT Mainboard | |
| CHK'D | | | | | | |
| APPV'D | | | | | | |
| MFG | | | | | | |
| QA | | | | MATERIAL: | DWG N0. B2644P02 | A3 |
| | | | | | | |
| | | | | WEIGHT: | SCALE 1:1 | SHEET 1 OF 1 |