System for controlling temperature and water flow

THERMO-CLOCK

Presented by :

- *Sourabh Bharat Devrukhkar*

Table of Contents

01 Motivation

02 Project Brief

03 Further Scope

04 Conclusion

Motivation

Stable Atmosphere Control in Various Industries:

- **Greenhouses**: Ensures proper water flow for irrigation and temperature control for plant growth.
- **Aquariums**: Maintains constant water temperature and flow rate for the health of aquatic life.
- **Industrial Systems**: Prevents overheating with precise temperature control in machines/processes.

Challenge:

Traditional methods rely on manual adjustments or expensive automation systems.

Solution:

An **approachable, efficient, and adaptable** solution for multiple applications.

Project Brief: Overview

Need for Precise Environmental Control:

- Essential for modern applications like **home automation**, **industrial cooling**, **greenhouses**, and **aquariums**.

Key parameters: Temperature and Water Flow control.

Crucial to ensure:

- Optimal operating conditions for machinery.
- Healthy growth conditions for plants.
- Stable water conditions for aquatic life.

Project Brief: Overview

Limitations of Traditional Systems:

Operated manually or require expensive, complex automated systems.

Technological Advancements:

Recent improvements in **microcontroller technology and sensor integration** allow for cost-effective, scalable solutions.

Project Approach:

Utilizes an Arduino microcontroller for temperature control and timer-based water flow regulation. Designed for minimal human intervention, providing an efficient, adaptable and affordable solution.

Project Brief: Workspace Used

ThinkerCAD –

- It is free online 3D Modelling tool by Autodesk, ideal for beginners, educators, and designers.
- File Exports: Save as STL, OBJ, or SVG for 3D printing.
- Circuit Design: Integrate electronic circuits for functional simulations.
- Block-based Coding: Create models with block-based logic, like LEGO.
- Minecraft Integration: Design models for use in Minecraft.
- Comparison: Simple, free alternative to complex CAD tools like SketchUp and Fusion 360.
- Mobile App: iPad app with AR features for on-the-go building and visualization.

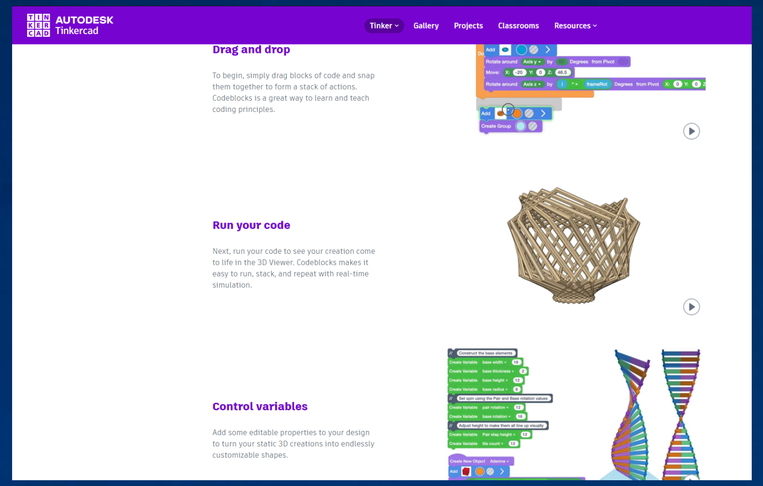

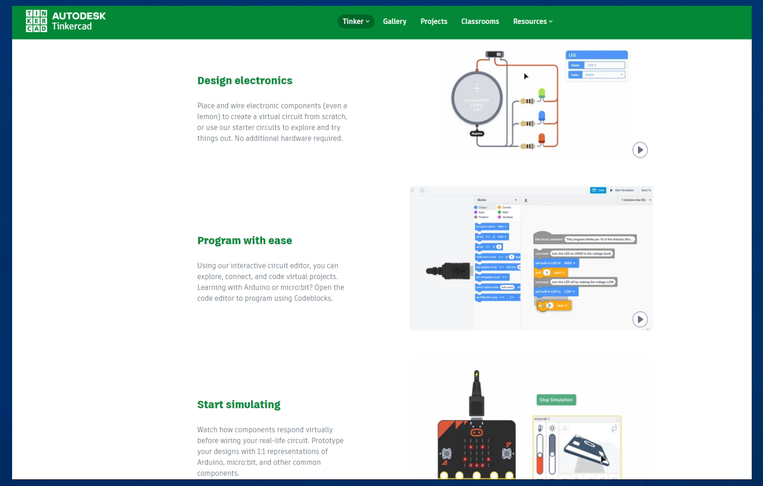

Project Brief: Circuit Design

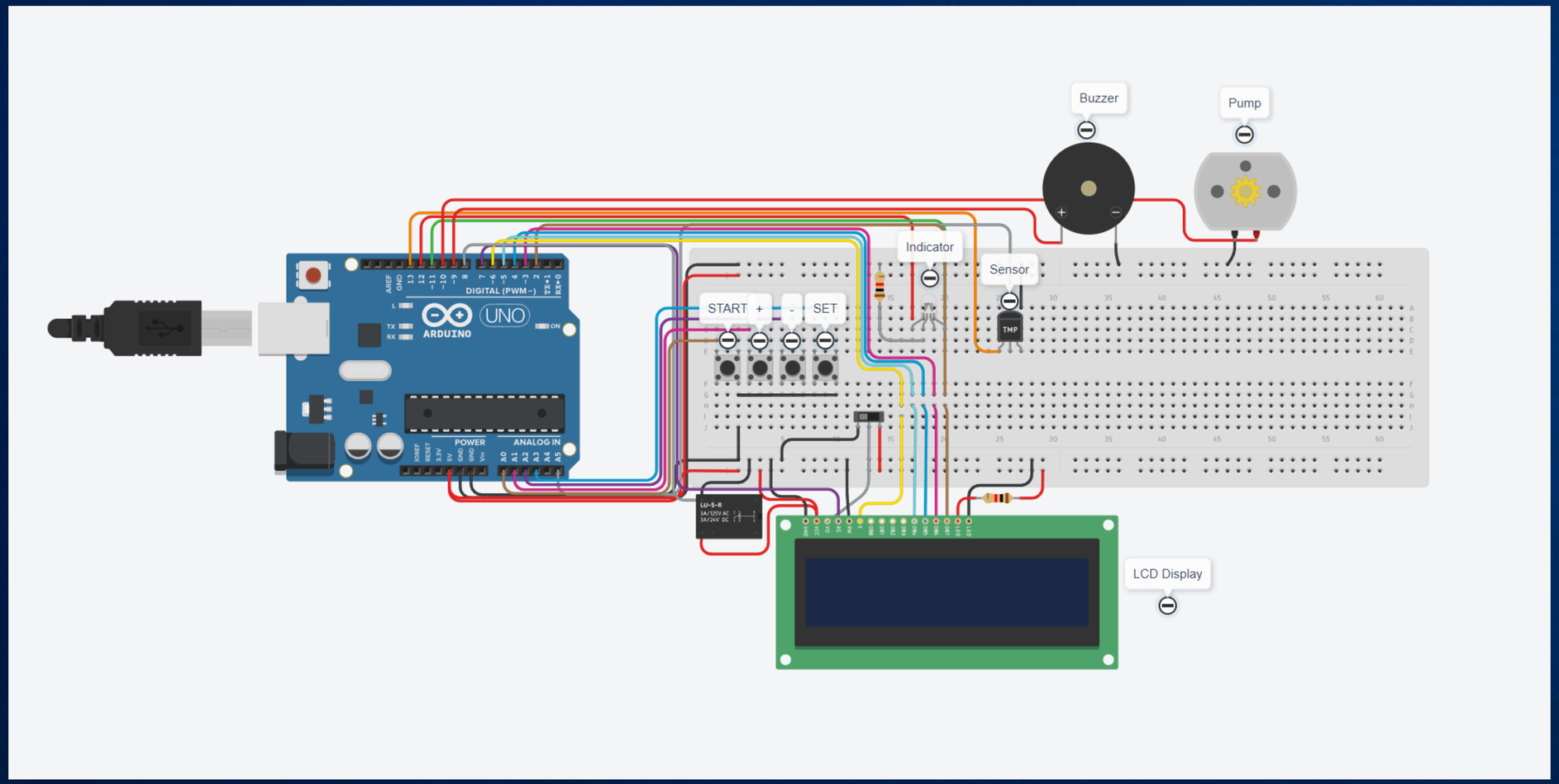

Project Brief: Circuit Working Breakdown

Stage 1: ***Parameters Selection***

- Once the system is powered on, the user can set the desired temperature and cycle duration using the Set button and.
- The temperature sensor, by default set to 25°C, must be manually adjusted to the desired value.

Stage 2: ***Under Normal Condition***

- Once the parameters are set, the user initiates the cycle.
- Under normal conditions, the system will complete the full cycle without any interruptions.
- This will be indicated by a green light.

Project Brief: Circuit Working Breakdown

Stage 3: ***Under Abnormal Condition***

- If the sensor's temperature deviates from the set value, either dropping or rising, the cycle will stop and an alarm will be triggered.
- This is signalled by a red light.

Stage 4: ***Sensor misconfiguration.***

- If the temperature sensor is not aligned with the desired set temperature, the cycle will not begin.

Project Brief: Results

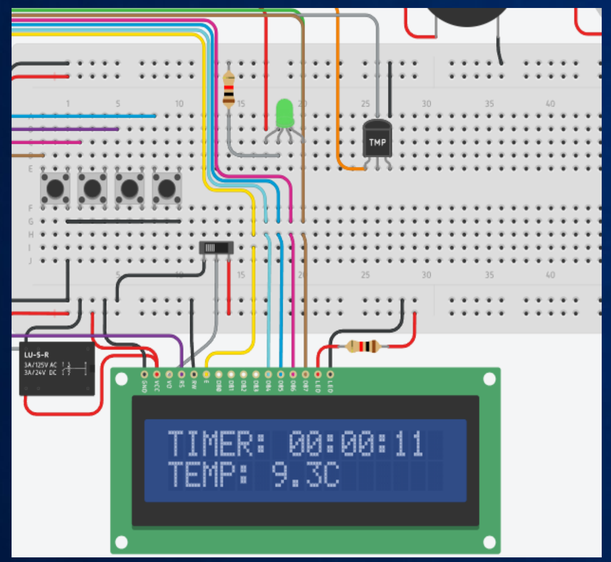

Normal Cycle

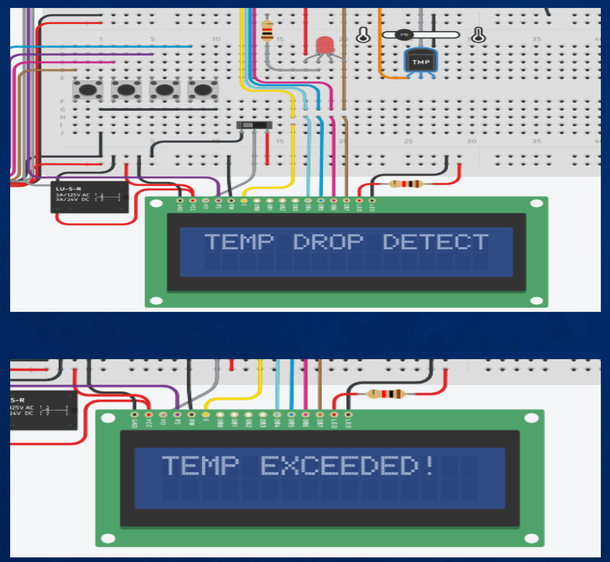

Under Abnormal Condition / Sudden temperature Change during Cycle

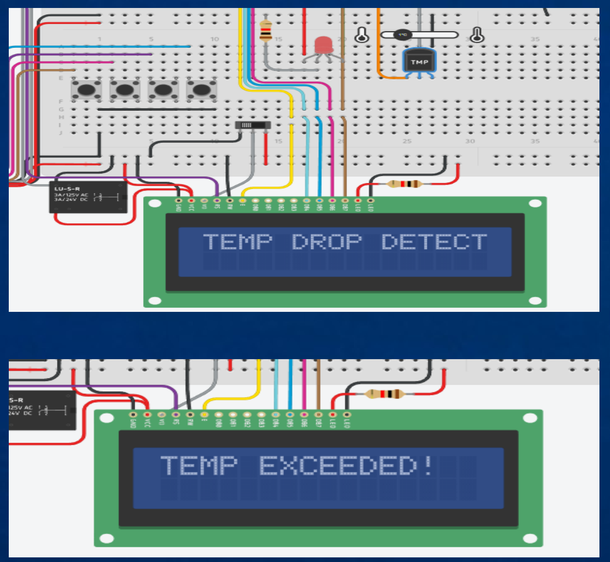

Sensor misconfiguration at initial stage.

Project Brief: Components Used

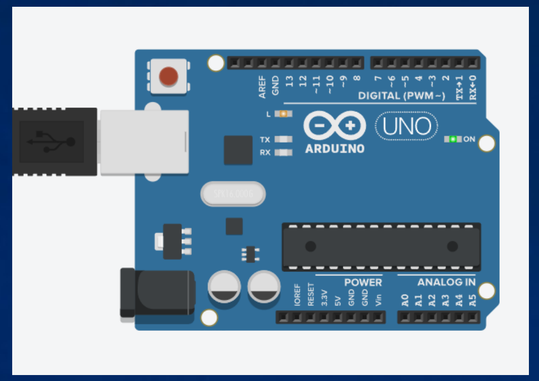

Arduino

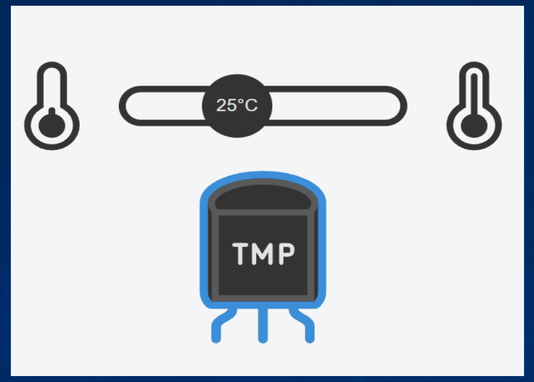

Temperature Sensor

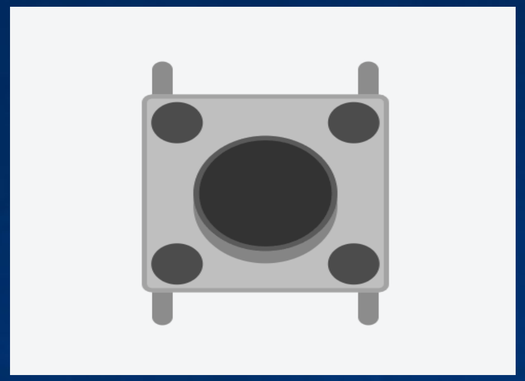

Push Button

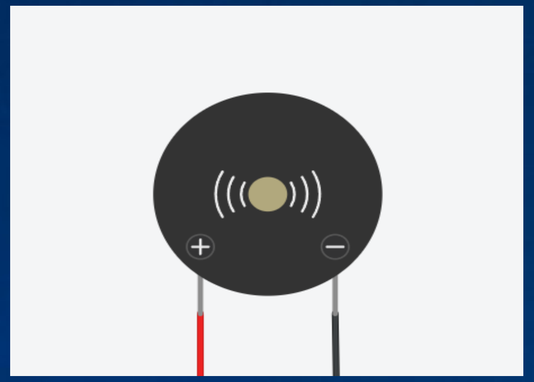

Buzzer

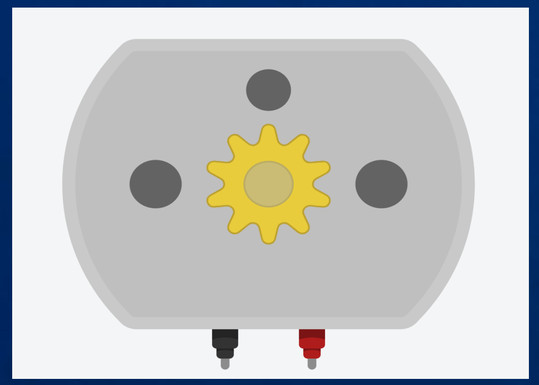

Motor/Pump

Relay

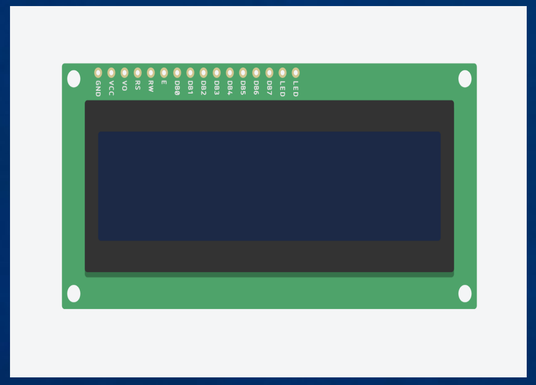

16x2 LCD Display

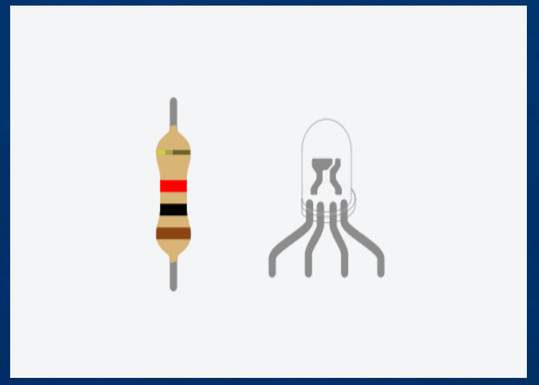

Resistor and LED

Project Brief: Components Used

- **Arduino -** Arduino is a flexible, user-friendly microcontroller development platform that allows users to build and program devices that can sense and control the physical world.
- **Temperature Sensor -** A temperature sensor is a device that detects and measures temperature, converting it into an electrical signal that can be read by a microcontroller or other electronic systems.
- **Push Button -** A push button is a simple mechanical switch that closes an electrical circuit when pressed, allowing current to flow and triggering an action in an electronic device or circuit.
- **Buzzer -** A buzzer is an electronic device that produces sound when activated by an electrical signal, often used in alarms, notifications, or feedback systems.
- **Motor/Pump -** A motor or pump is a mechanical device that converts electrical energy into motion, typically used to drive machinery or move fluids in various applications.
- **Relay -** A relay is an electrically controlled switch that manages higher-voltage circuits with a low-voltage signal.
- **LCD Display -** A 16x2 LCD display has 16 columns and 2 rows, capable of showing 32 characters, commonly used in electronics projects for displaying text.
- **Resistor -** A resistor is an electronic component that limits or regulates the flow of electric current in a circuit.

Project Brief: Simulation Result Video

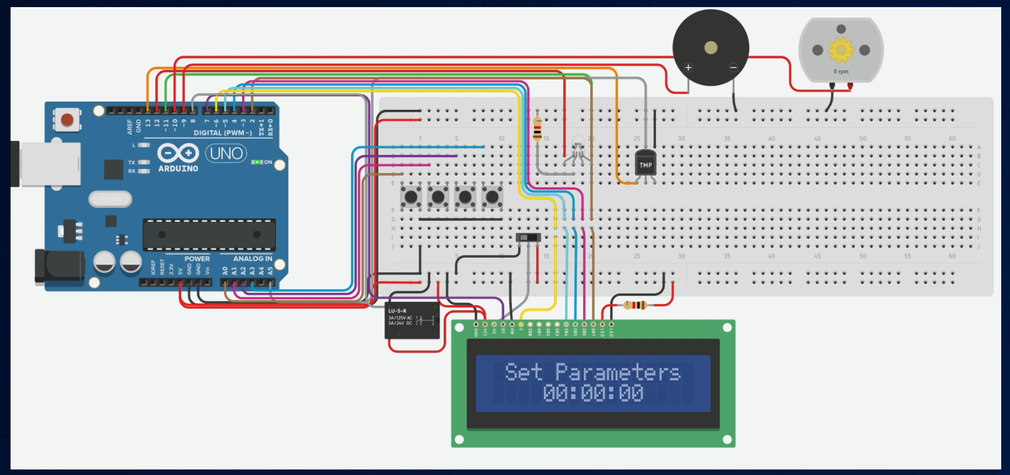

Normal Cycle

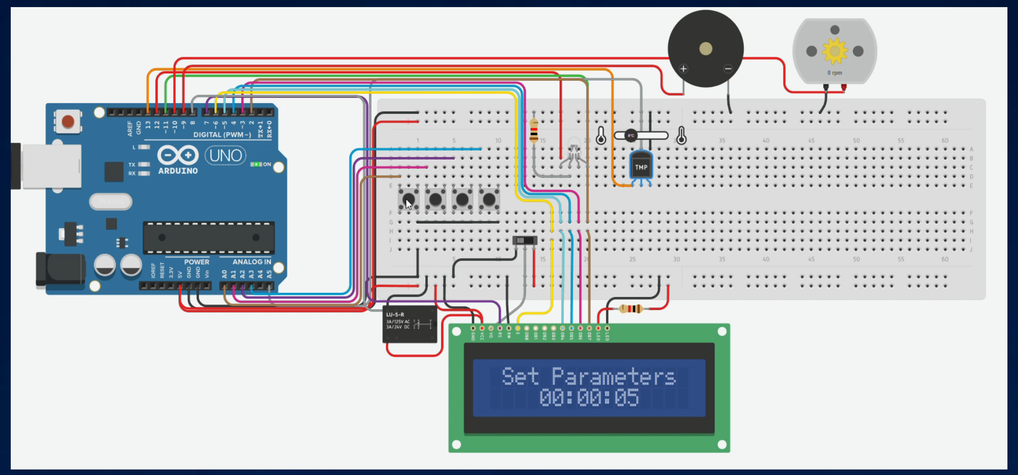

Abnormal Condition /
Sudden temperature
Change during Cycle

Future Scope

- **Integration with IoT** : Enable remote monitoring and control via smartphones or web applications.
- **Enhanced Sensor Accuracy** : Incorporate advanced sensors for more precise temperature and water flow management.
- **Energy Efficiency** : Implement energy-saving features for optimal resource consumption.
- **AI-based Predictive Control** : Use AI to predict and adjust environmental conditions based on historical data.
- **Cloud Integration** : Store data in the cloud for advanced analytics and real-time insights.
- **Multi-system Compatibility** : Extend the system to control other environmental factors, such as humidity and light.

Conclusion

- Efficient automation of water flow and temperature control.
- Reduced manual intervention and optimized resource use.
- Arduino-based system demonstrates reliability and scalability.
- Successfully tested using Tinker cad simulations for real-world scenarios.
- Practical and easy-to-use solution for environmental management.

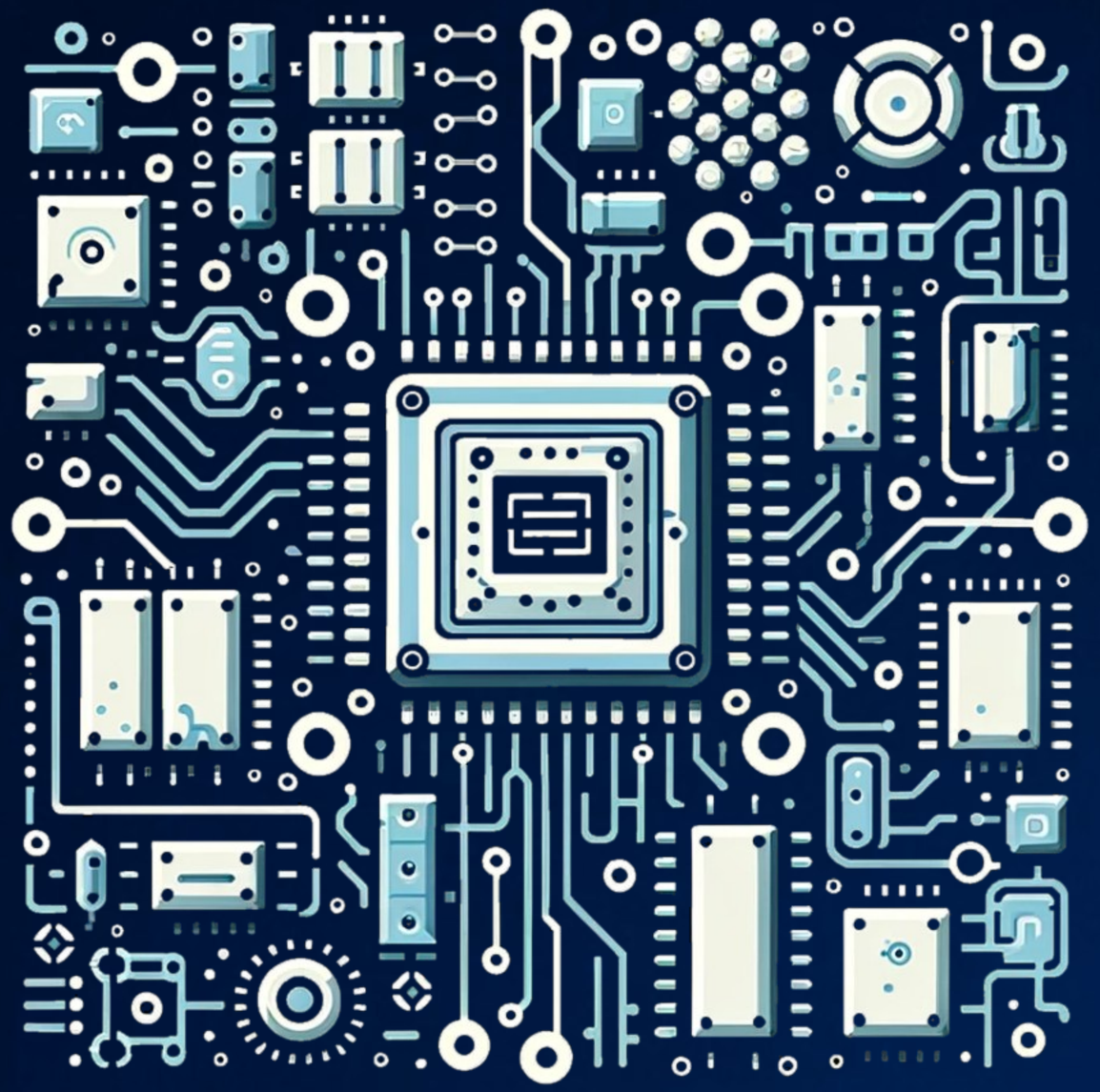

Thank You