THERMO CLOCK

PRESENTED BY

Sourabh Bharat Devrukhkar

UNDER THE GUIDANCE OF

Prof. Manjunath G

Acme Grade Embedded Systems

System for Controlling

Temperature & Water Flow

An Arduino-based intelligent environmental control system designed for greenhouses, aquariums, and industrial applications.

8	4	25°C
Components	Key Stages	Default Temp

TABLE OF CONTENTS

01 **Motivation**

Why this project matters

02 **Project Brief**

Design, circuit & components, Simulation

03 **Future Scope**

IoT, AI & beyond

04 **Conclusion**

Key outcomes

Why This Project Matters

⚠ Challenge

Manual or expensive automation

✓ Solution

Affordable, adaptable, efficient

Greenhouses

Water flow and temperature control for optimal plant growth conditions

Aquariums

Maintains stable water temperature and flow for aquatic life

Industrial

Prevents overheating with precise control in machines and processes

02 / Project Brief · Overview

NEED FOR THIS SYSTEM

- Essential for modern applications: home automation, industrial cooling, greenhouses, aquariums
- Key parameters to manage: Temperature and Water Flow
- Ensures optimal operating conditions for machinery
- Healthy growth conditions for plants
- Stable water conditions for aquatic life

PROJECT APPROACH

- Traditional systems are manual or require expensive, complex automation
- Microcontroller advances now allow cost-effective, scalable solutions
- Arduino microcontroller for temperature control
- Timer-based water flow regulation built-in
- Designed for minimal human intervention — efficient, adaptable, affordable

Workspace: TinkerCAD

Free Online Tool

Browser-based 3D modelling by Autodesk — no install needed

Circuit Design

Integrate electronic circuits with functional simulations

File Export

Save as STL, OBJ, or SVG for 3D printing and fabrication

Block-Based Coding

Create logic models with block-based programming, like LEGO

Minecraft Integration

Design and export models directly for Minecraft builds

Mobile App

iPad app with augmented reality features for on-the-go work

Comparison: TinkerCAD is a simpler, free alternative to complex CAD tools like SketchUp and Fusion 360

Circuit Design: TinkerCAD

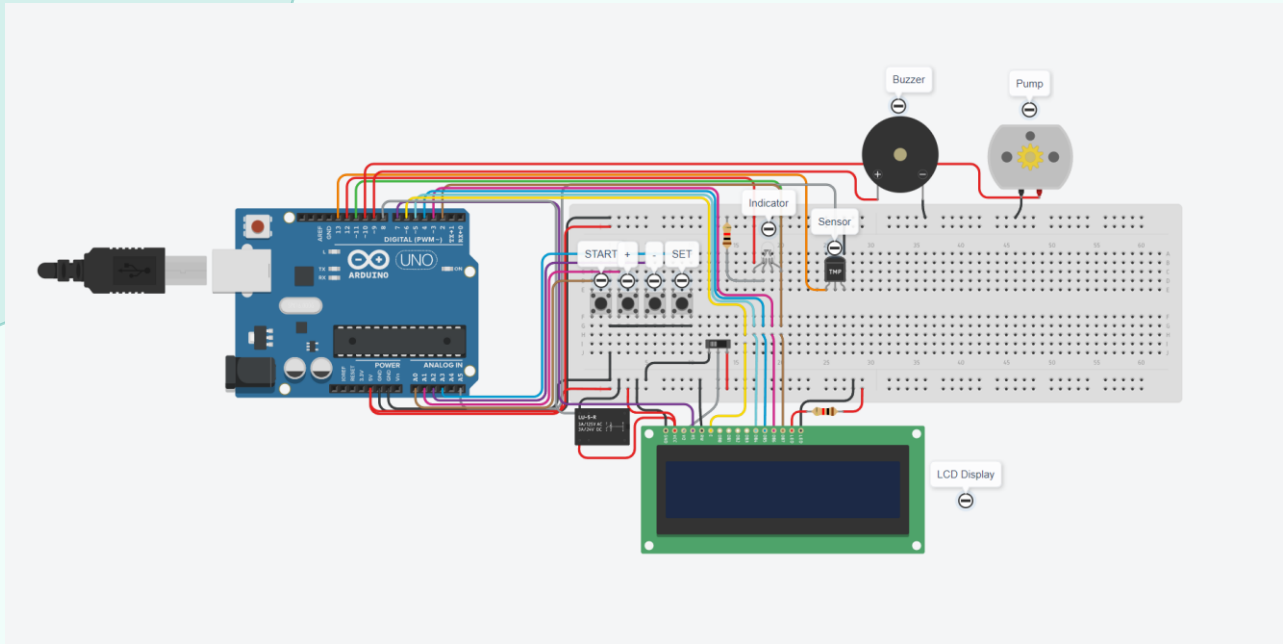

02 / Project Brief · Circuit Working Breakdown

Stage 1 Parameter Selection

- Power on → user sets desired temperature and cycle duration via Set button
- Temperature sensor defaults to 25°C and must be manually adjusted

Stage 2 Normal Condition

- Once parameters are set, user initiates the cycle
- Under normal conditions, cycle completes without interruption
- Status indicated by a GREEN light on the display

02 / Project Brief · Circuit Working Breakdown (cont.)

Stage 3 Abnormal Condition

- If sensor temperature deviates from the set value (higher or lower), cycle halts and alarm triggers
- Indicated by a RED light — alerts operator immediately

Stage 4 Sensor Misconfiguration

- If the temperature sensor is not aligned with the desired set temperature, cycle will not begin
- Prevents incorrect operation before the process starts

System Flow: Set Parameters → Normal Cycle (Green) → Abnormal? Alarm (Red) → Misconfigured? Block Start

Components Used

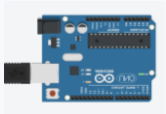

Arduino

Flexible microcontroller platform for sensing and control

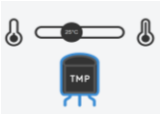

Temperature Sensor

Detects temperature, converts to electrical signal

Push Button

Mechanical switch to close circuit and trigger actions

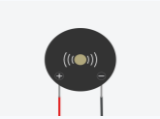

Buzzer

Produces sound for alarms, notifications, and feedback

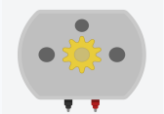

Motor / Pump

Converts electrical energy to motion for fluid movement

Relay

Electrically-controlled switch for higher-voltage circuits

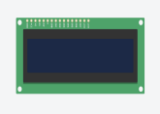

16×2 LCD Display

Shows 32 characters — displays cycle status and data

Resistor & LED

Current limiting and visual status indicators (red/green)

Simulation Video : TinkerCAD

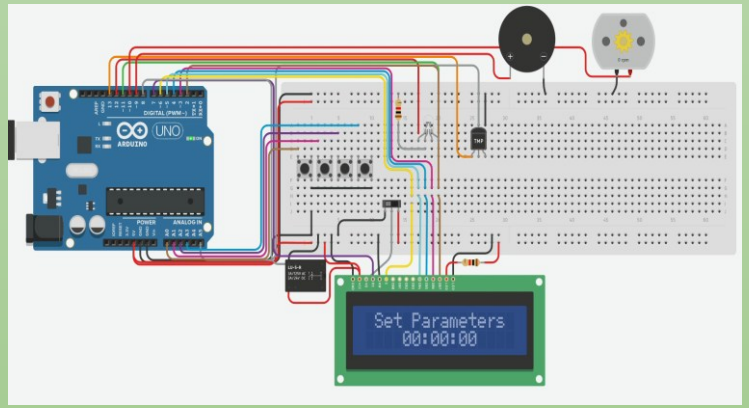

Normal Cycle

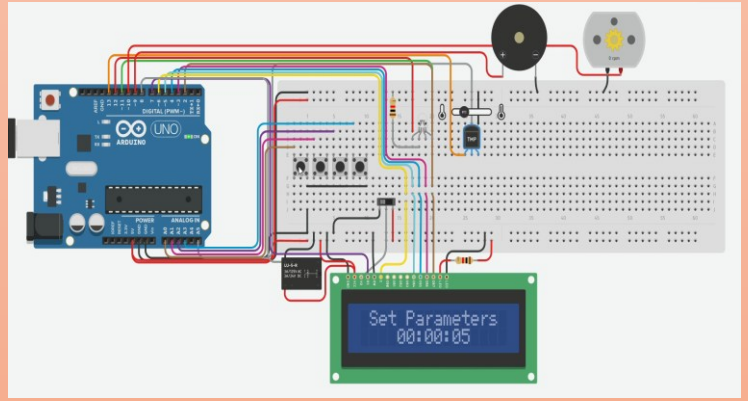

Abnormal Condition / Sudden temperature Change during Cycle

03 / Future Scope

IoT Integration

Remote monitoring and control via smartphones or web applications

Enhanced Sensor Accuracy

Advanced sensors for more precise temperature and flow management

Energy Efficiency

Smart energy-saving features for optimal resource consumption

AI Predictive Control

Machine learning to anticipate and adjust conditions from historical data

Cloud Integration

Store data in the cloud for advanced analytics and real-time insights

Multi-System Compatibility

Extend control to humidity, light, and other environmental factors

04 / Conclusion: Key Takeaways

- ✅ Efficient automation of water flow and temperature control
- ⚡ Reduced manual intervention and optimized resource usage
- 🔧 Arduino-based architecture demonstrates reliability and scalability
- 🧪 Successfully tested using TinkerCAD simulations for real-world scenarios
- 🌱 Practical, easy-to-use solution for diverse environmental management needs

Thank You