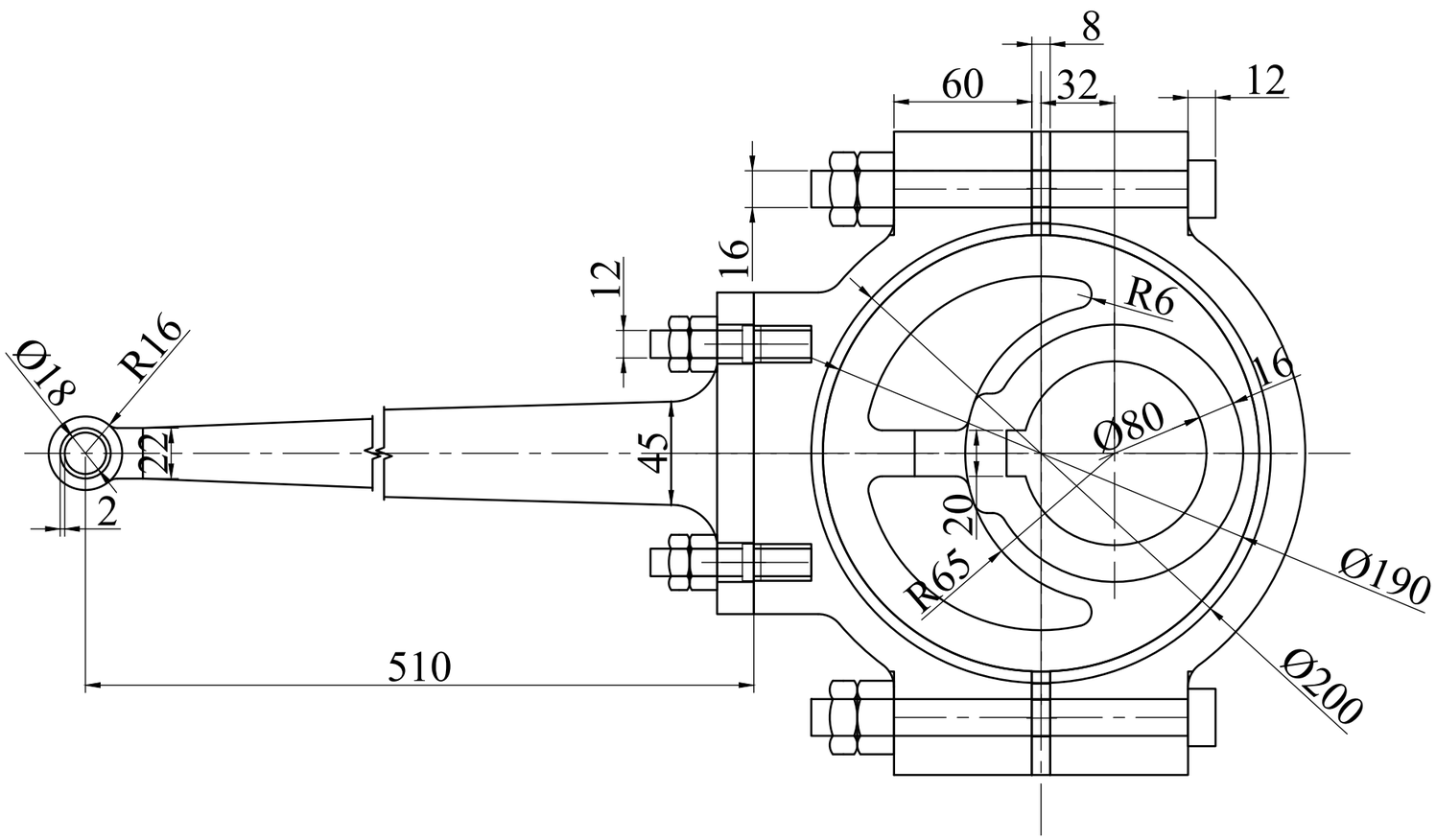

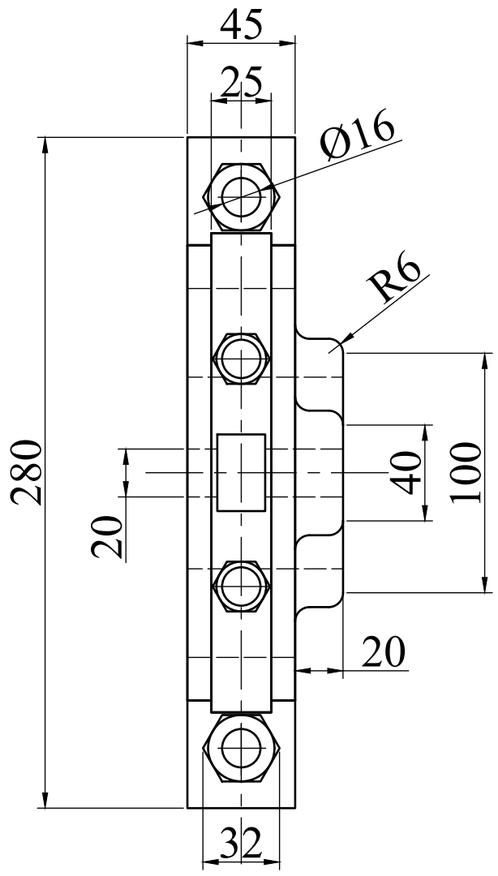

No.	Name	Material	Qty
1	Straps	CI	2
2	Sheave	CI	1
3	Packing Strip	Leather	2
4	Strap Bolt	MS	2
5	Stud with Nut	MS	2
6	Eccentric Rod	Forged Steel	1

Name: Sourajyoti Das	
Roll No.: 150	Dept.: A22
Title: Eccentric	
Proj. Symbol:	Scale: 1:2