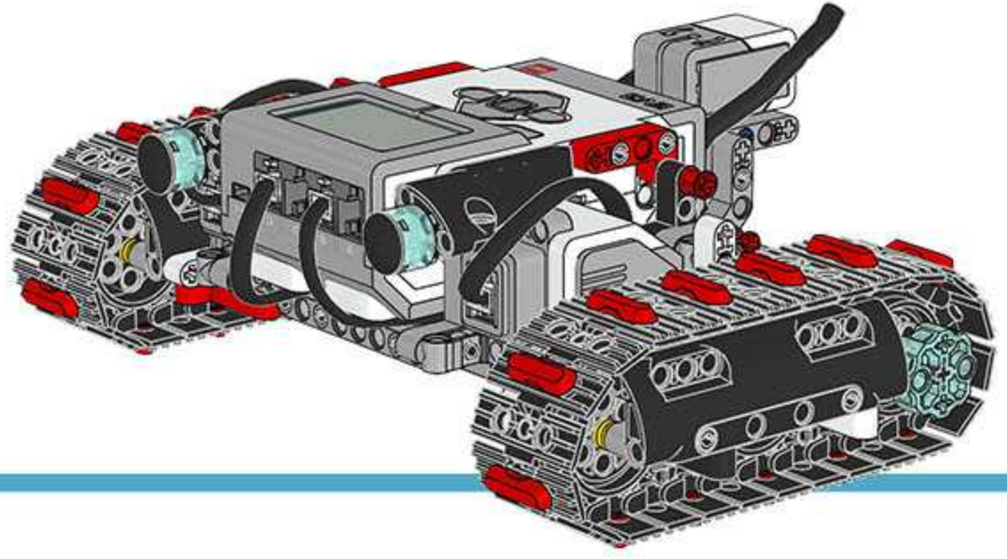

LEGO mindstorms education EV3

1 x

LEGO MINDSTORMS Education
Core Set
GRUND-SET Ensemble de base
Set principal Conjunto Principal
ALAPKÉSZLET
iPod iPhone iPad
45544
LEGOeducation.com
LEGO mindstorms education EV3

1 x

LEGO MINDSTORMS Education
Expansion Set
Erweiterungs-Set Ensemble d'expansion
Set de expansión Conjunto de Expansão
BŐVÍTŐ KÉSZLET
45560
LEGOeducation.com
LEGO mindstorms education EV3

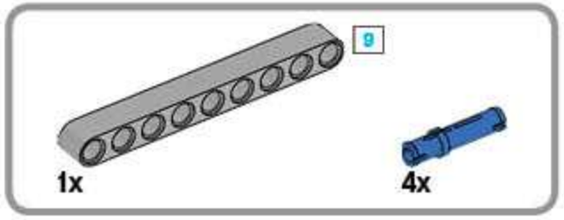

1

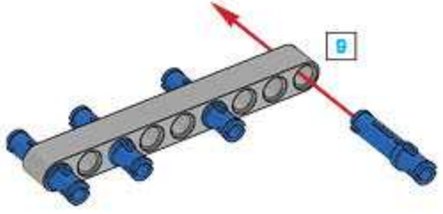

2

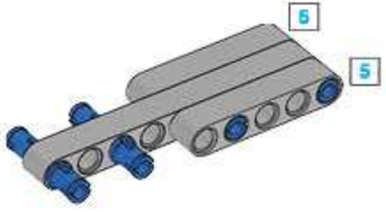

3

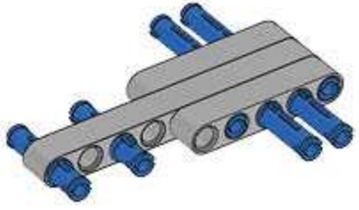

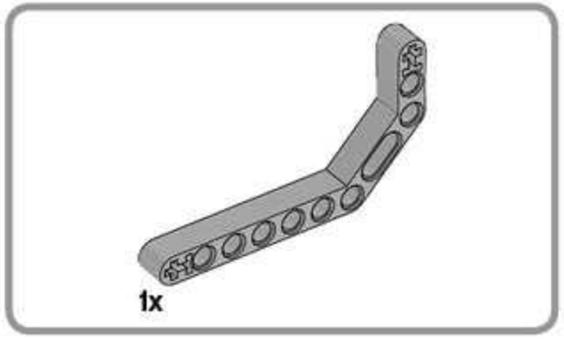

4

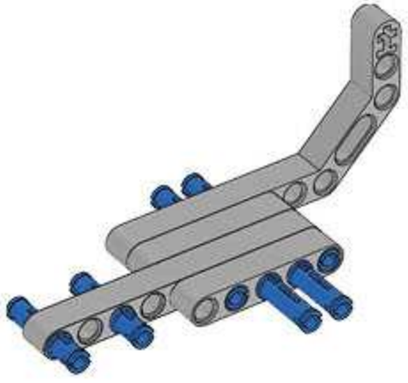

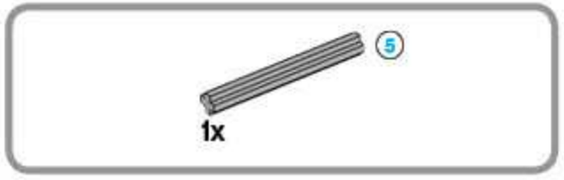

5

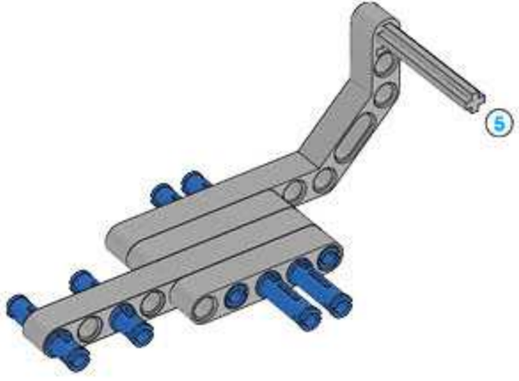

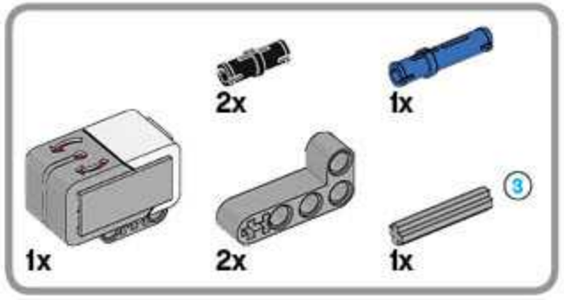

6

1

2

3

4

7

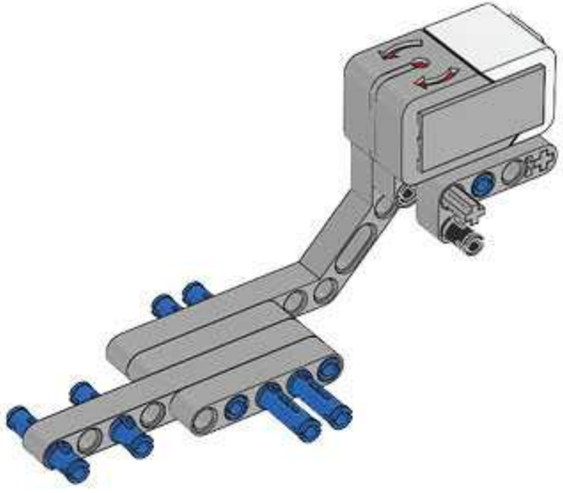

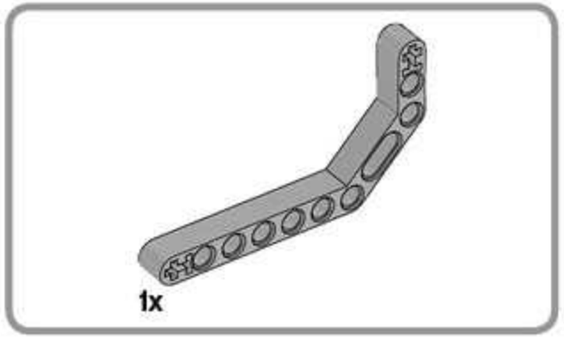

8

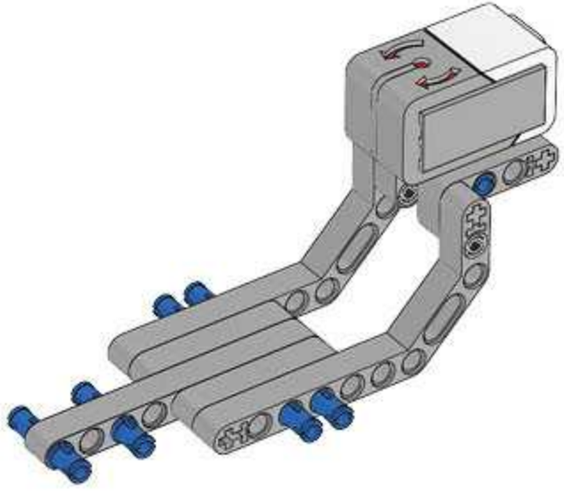

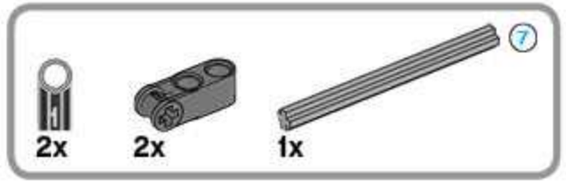

9

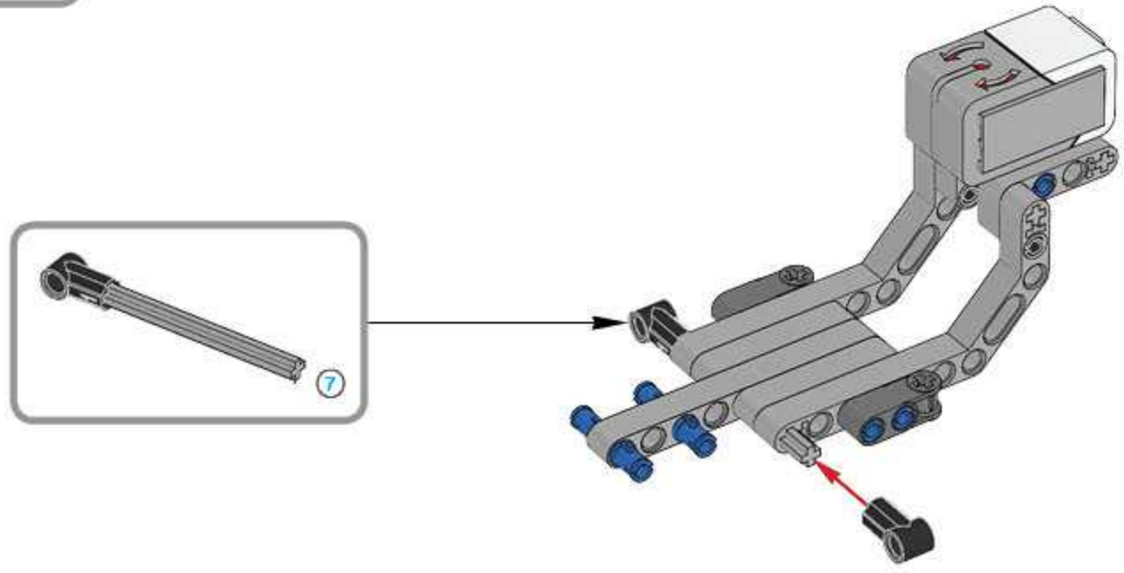

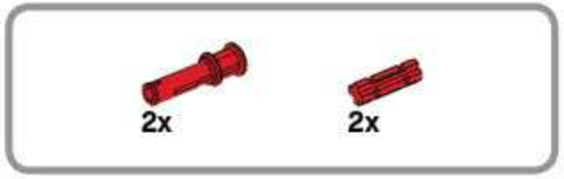

10

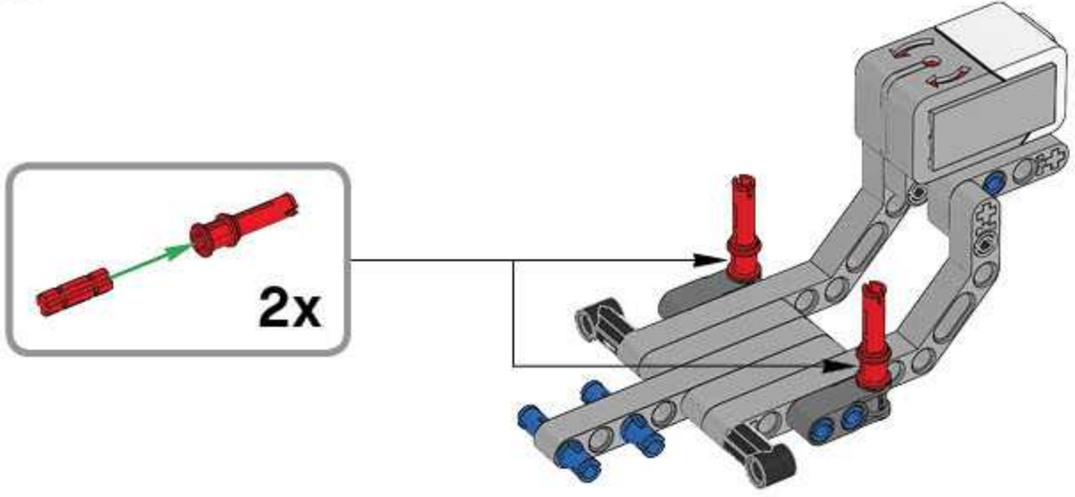

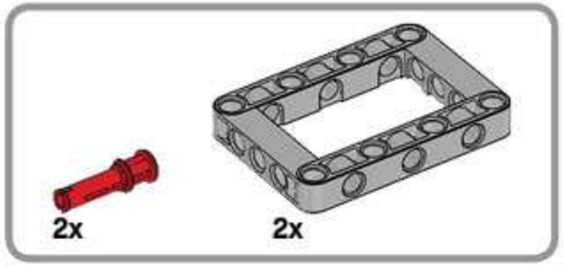

11

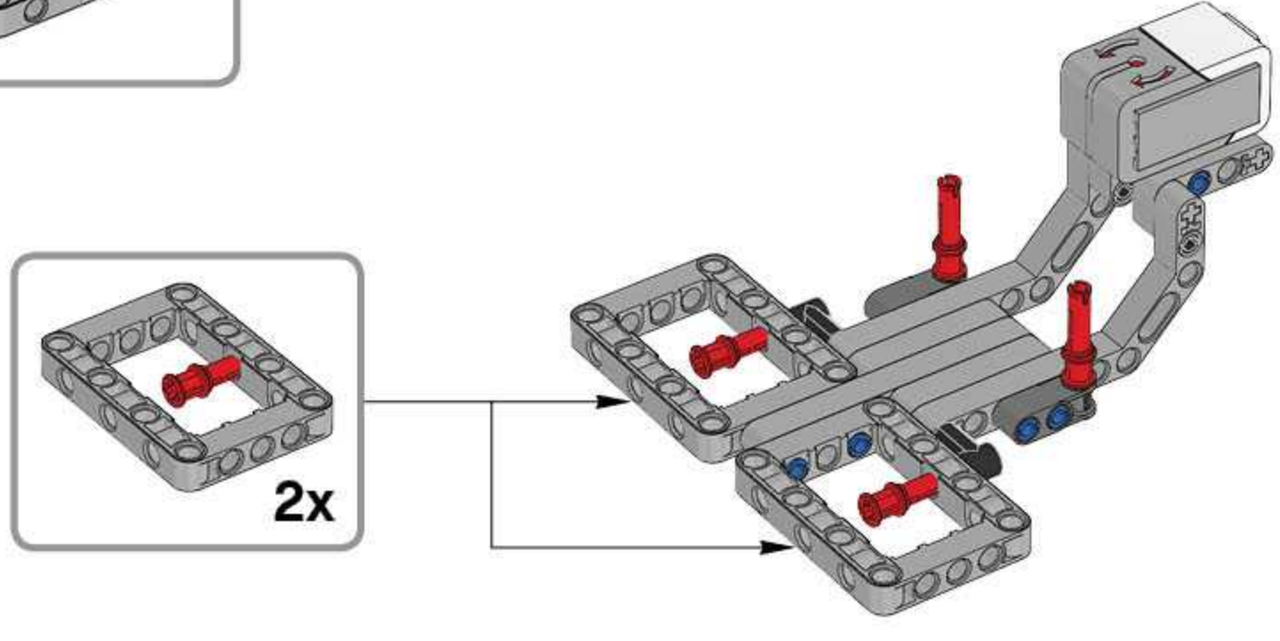

12

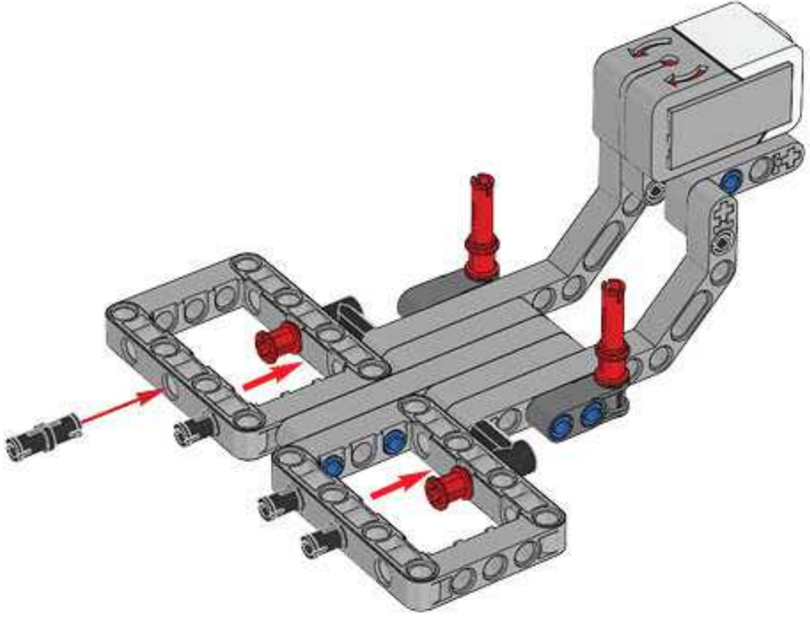

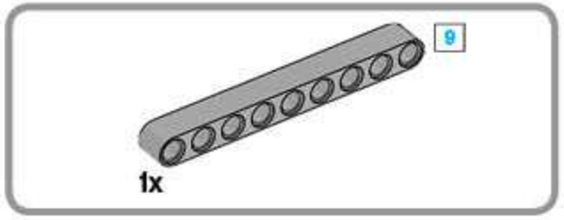

13

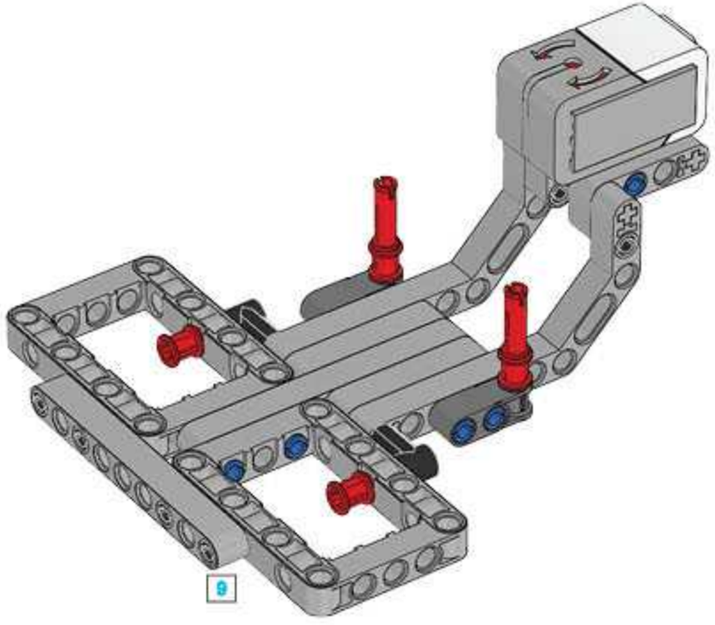

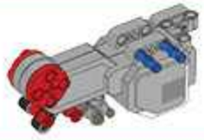

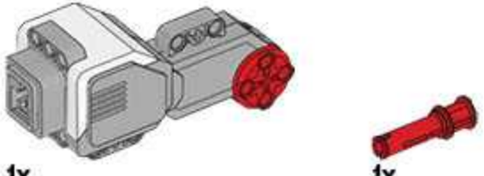

14

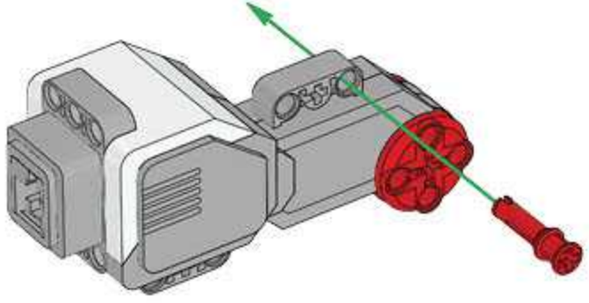

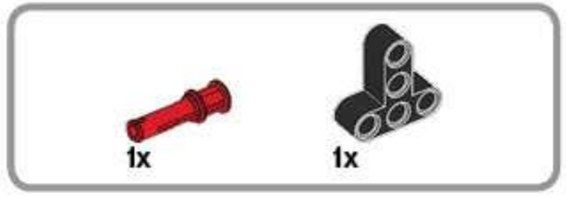

15

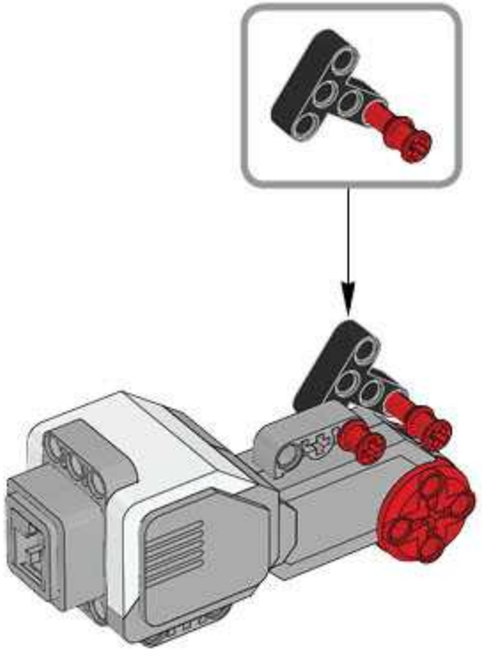

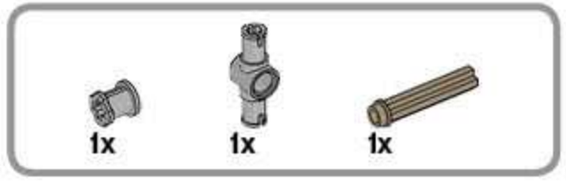

16

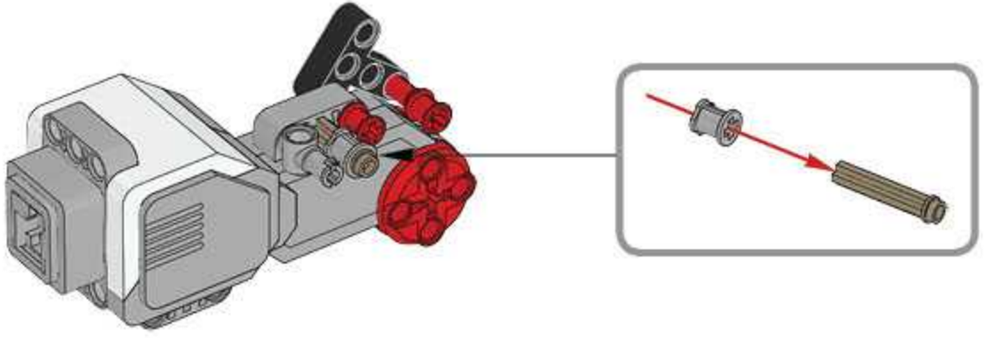

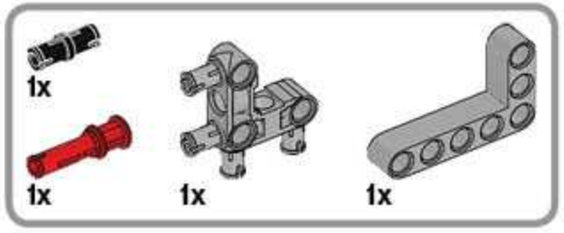

17

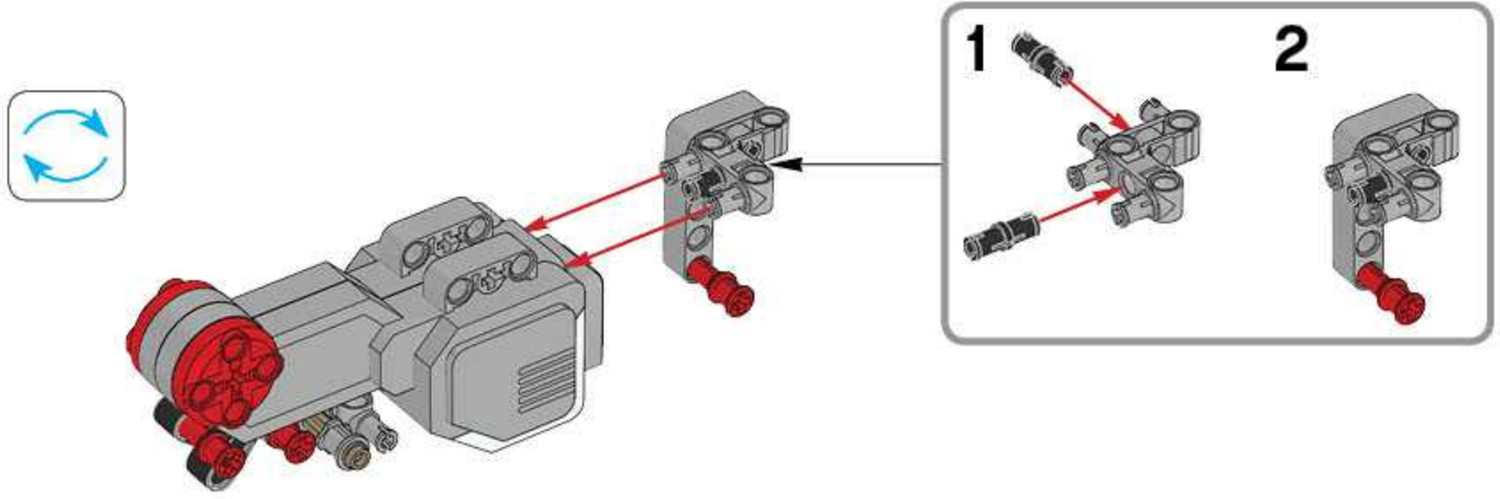

18

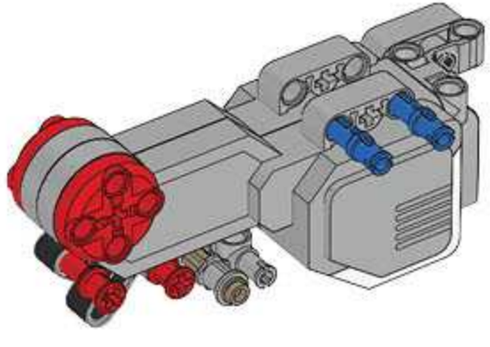

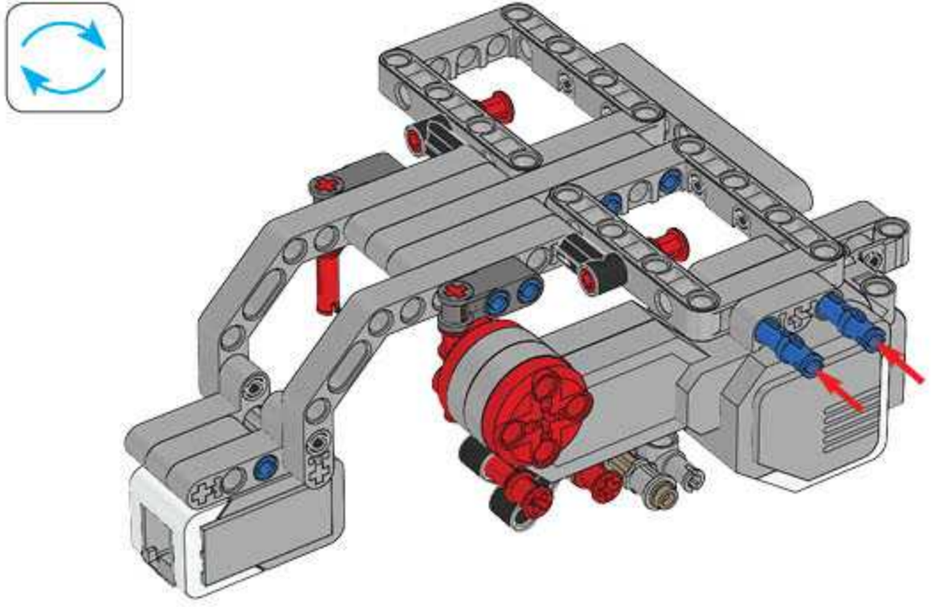

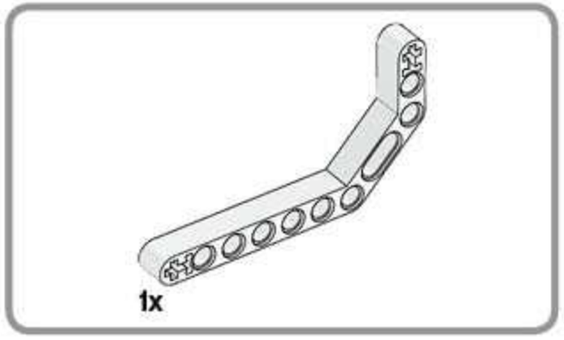

20

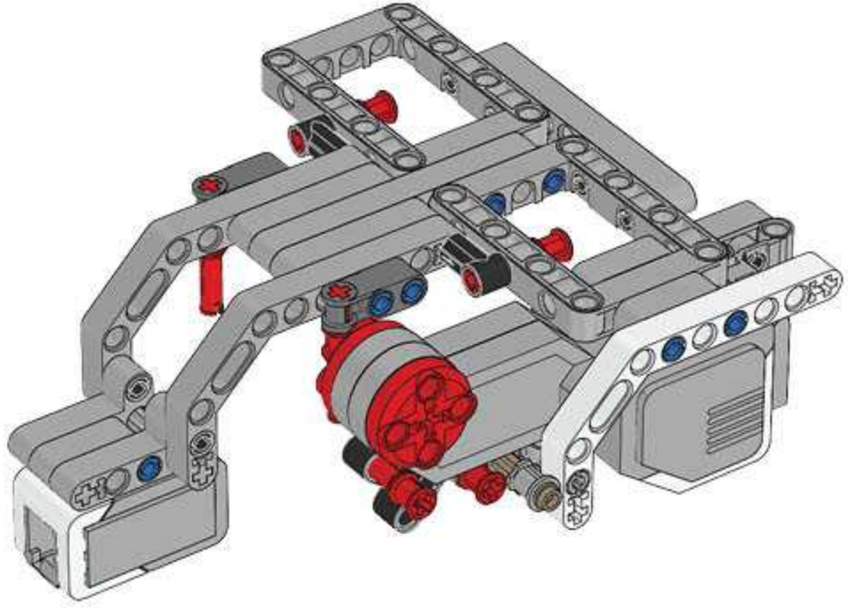

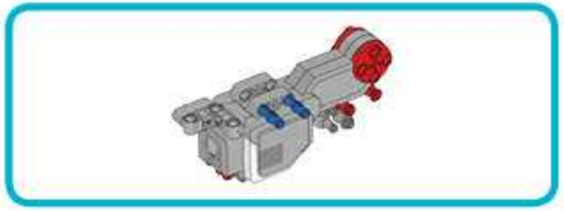

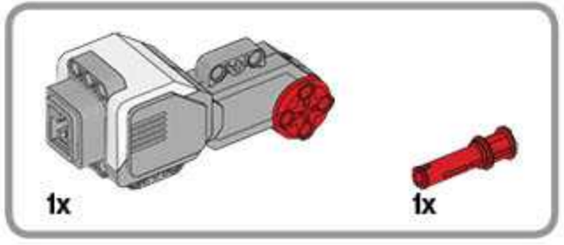

21

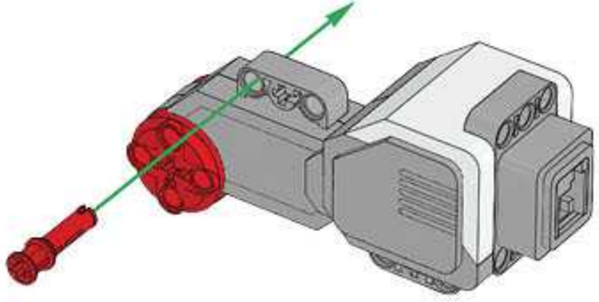

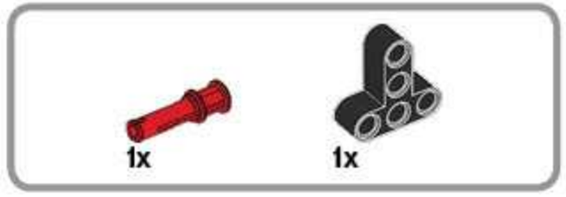

22

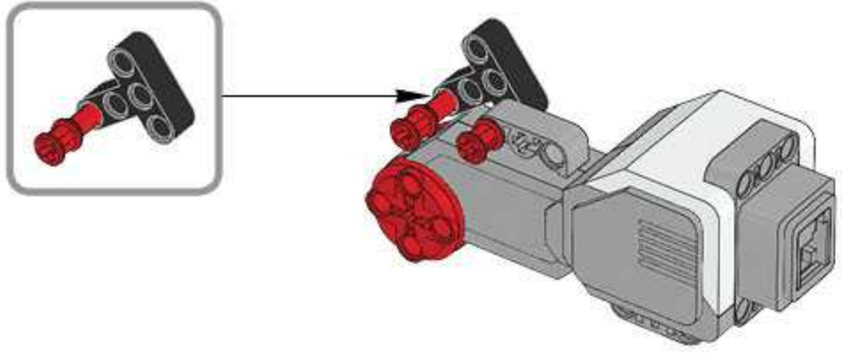

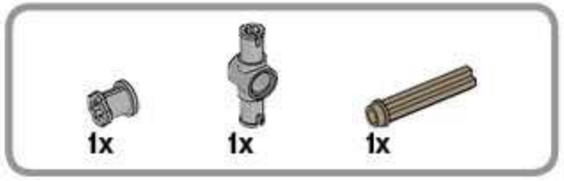

23

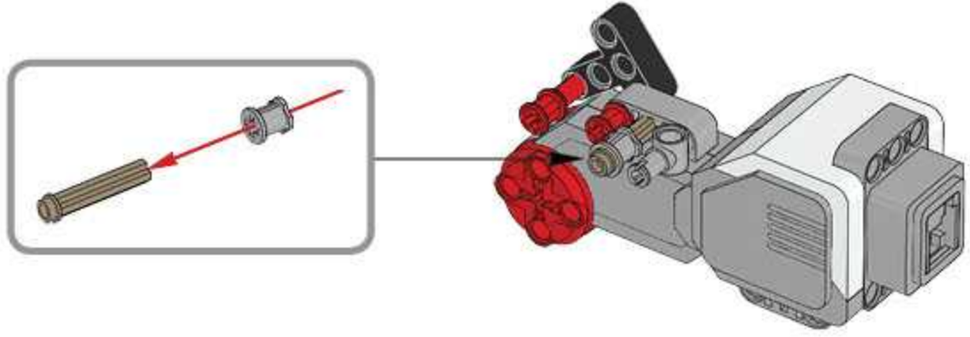

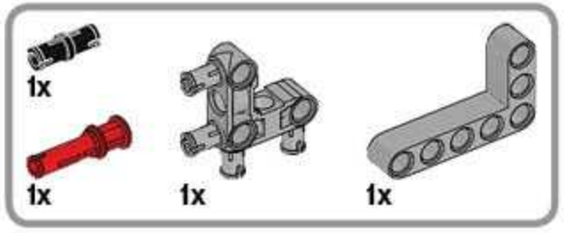

24

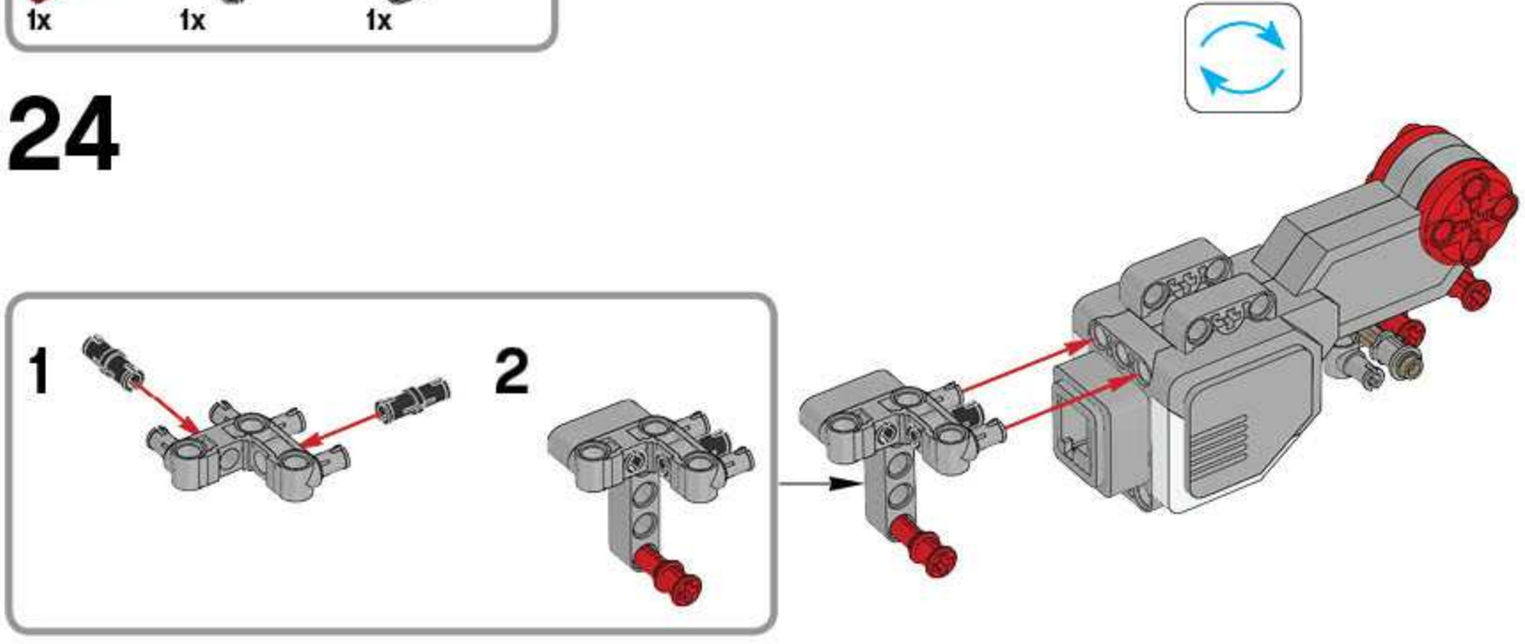

25

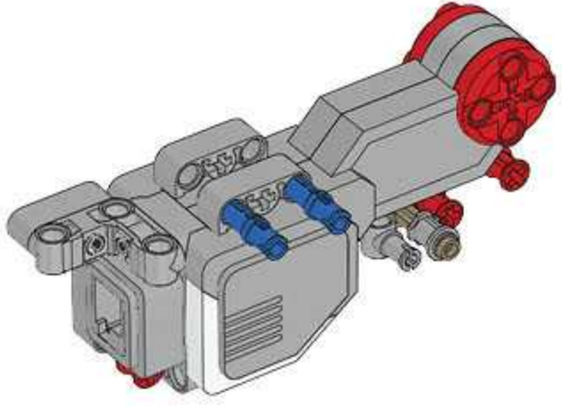

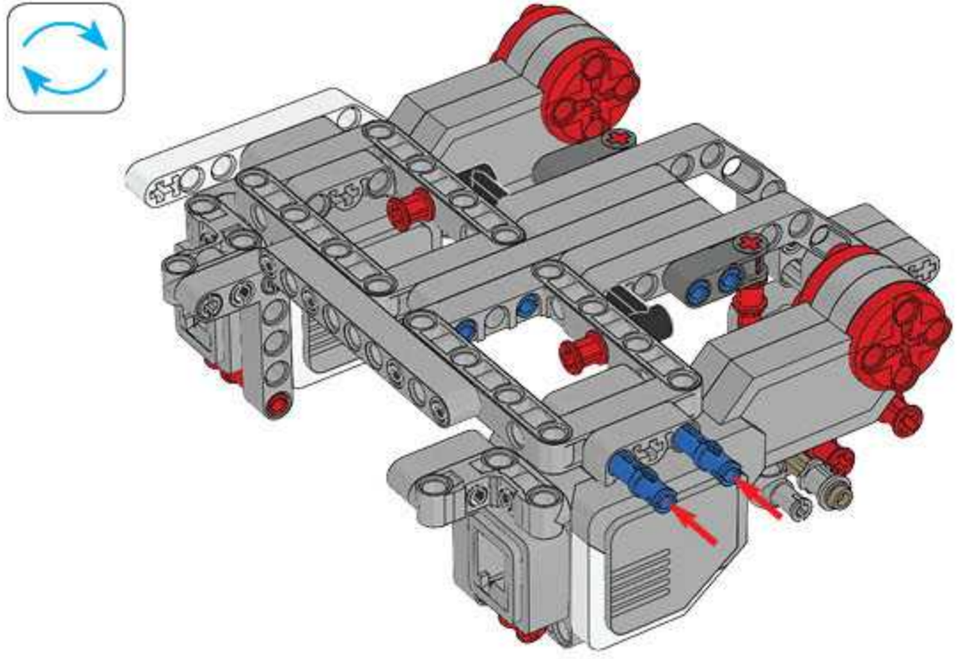

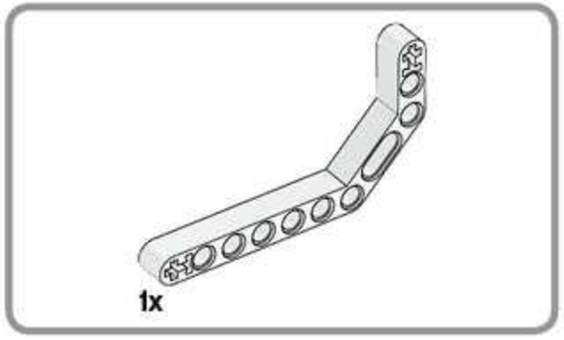

27

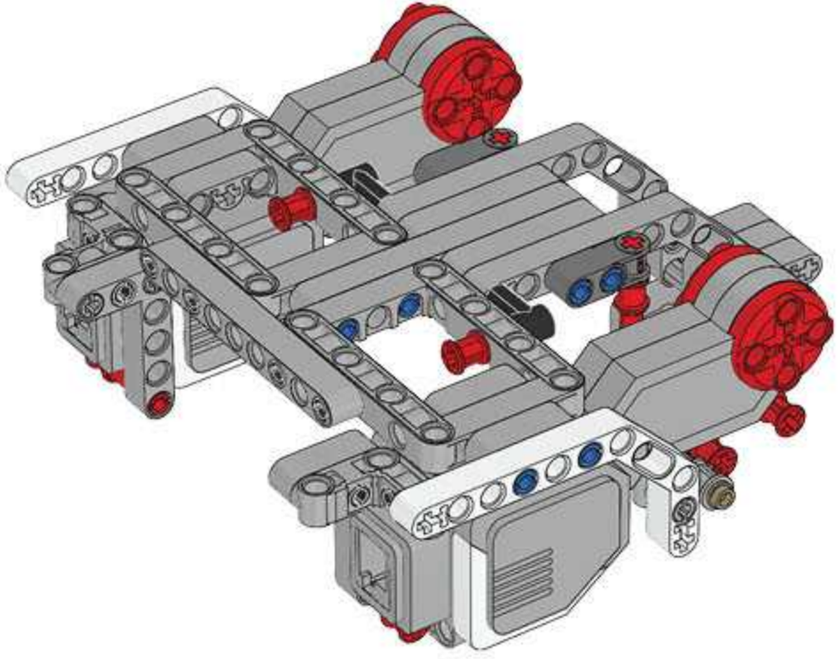

28

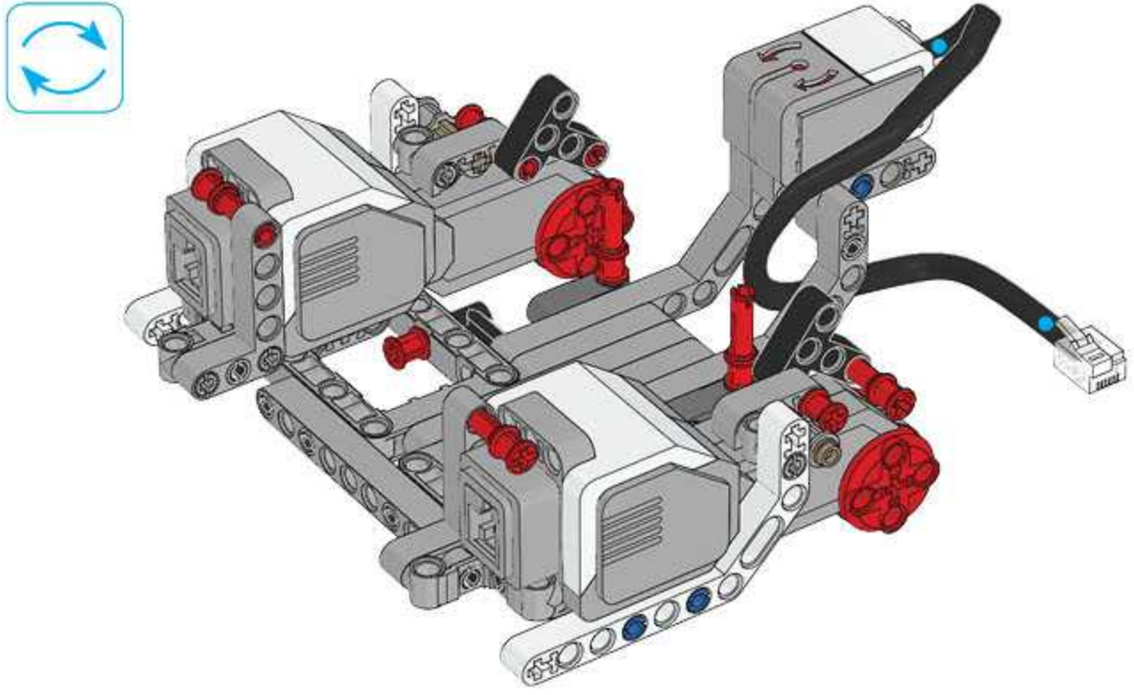

29

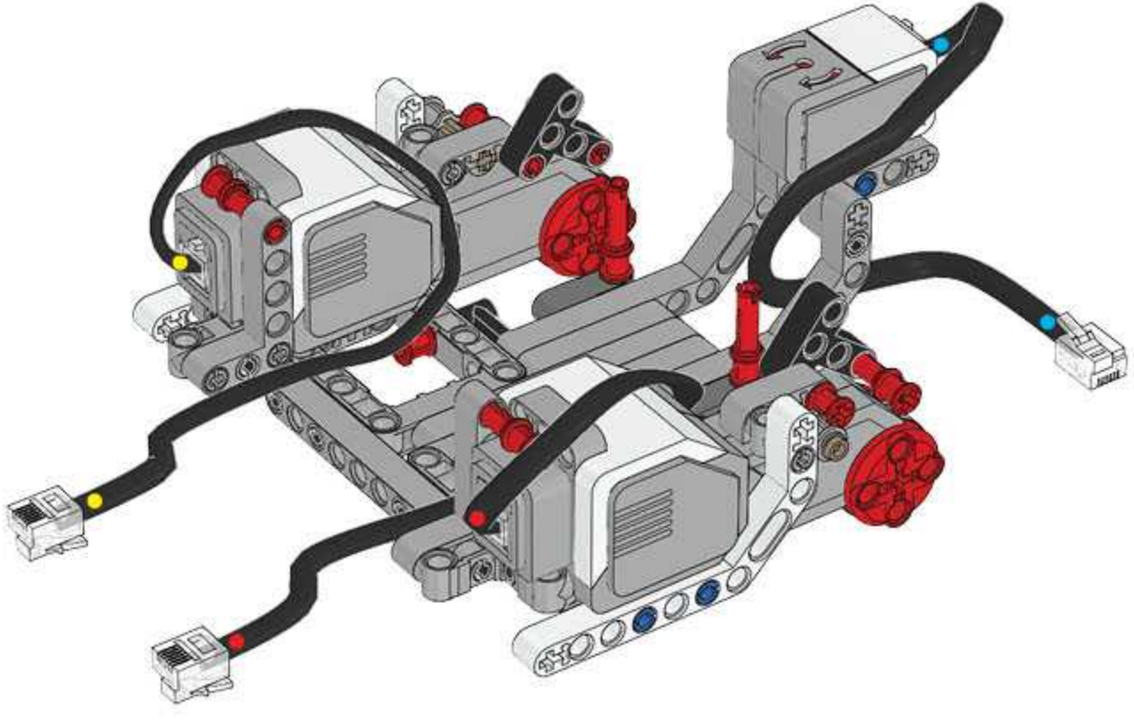

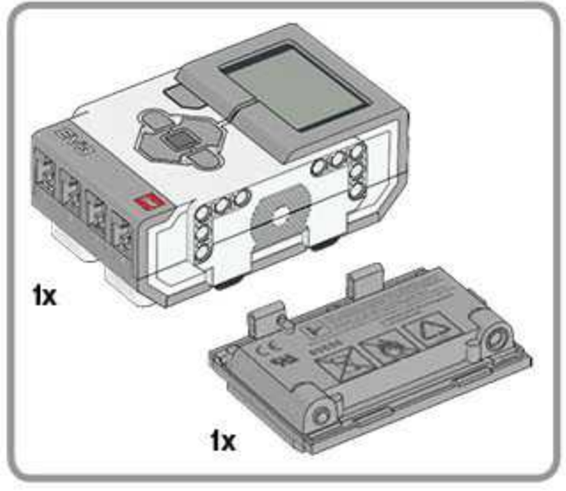

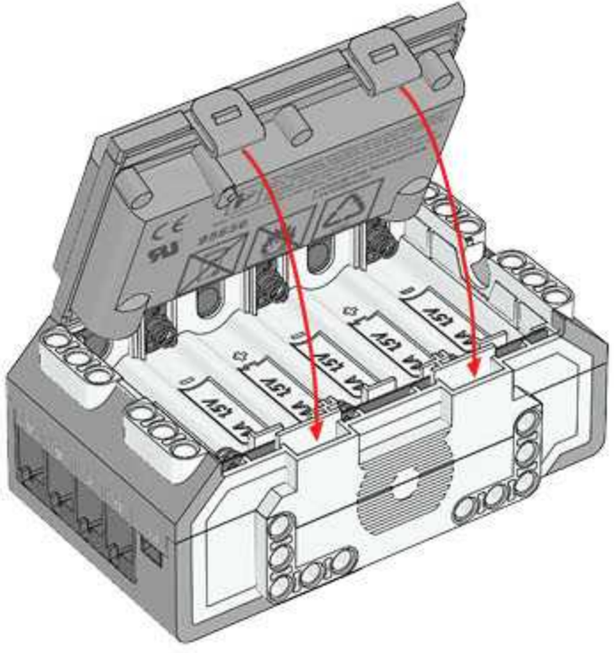

30

31

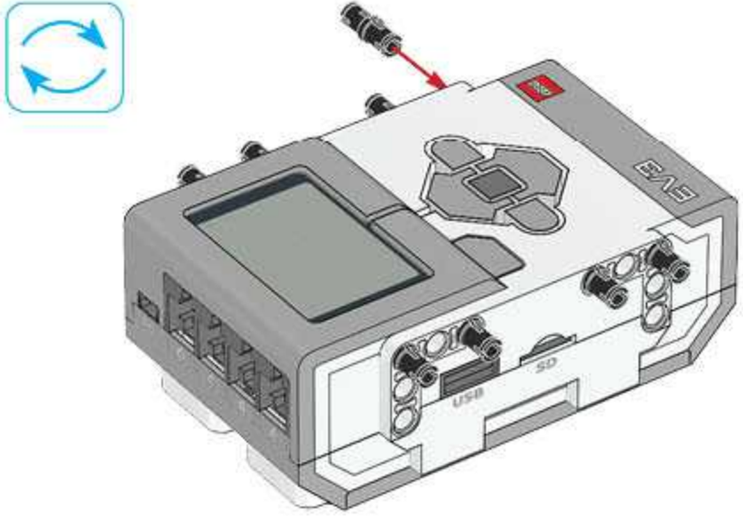

32

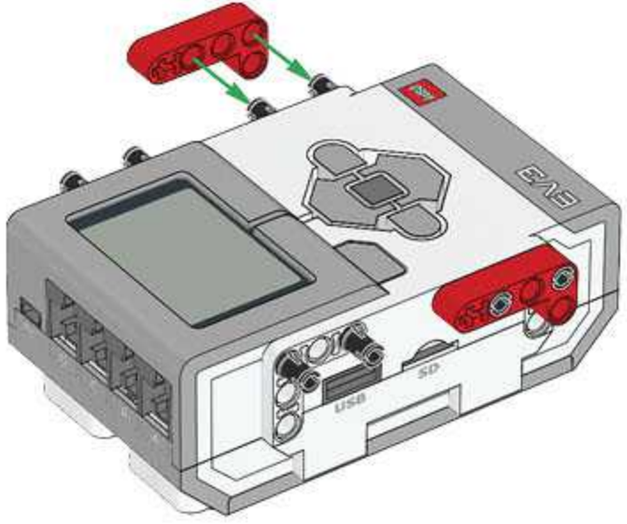

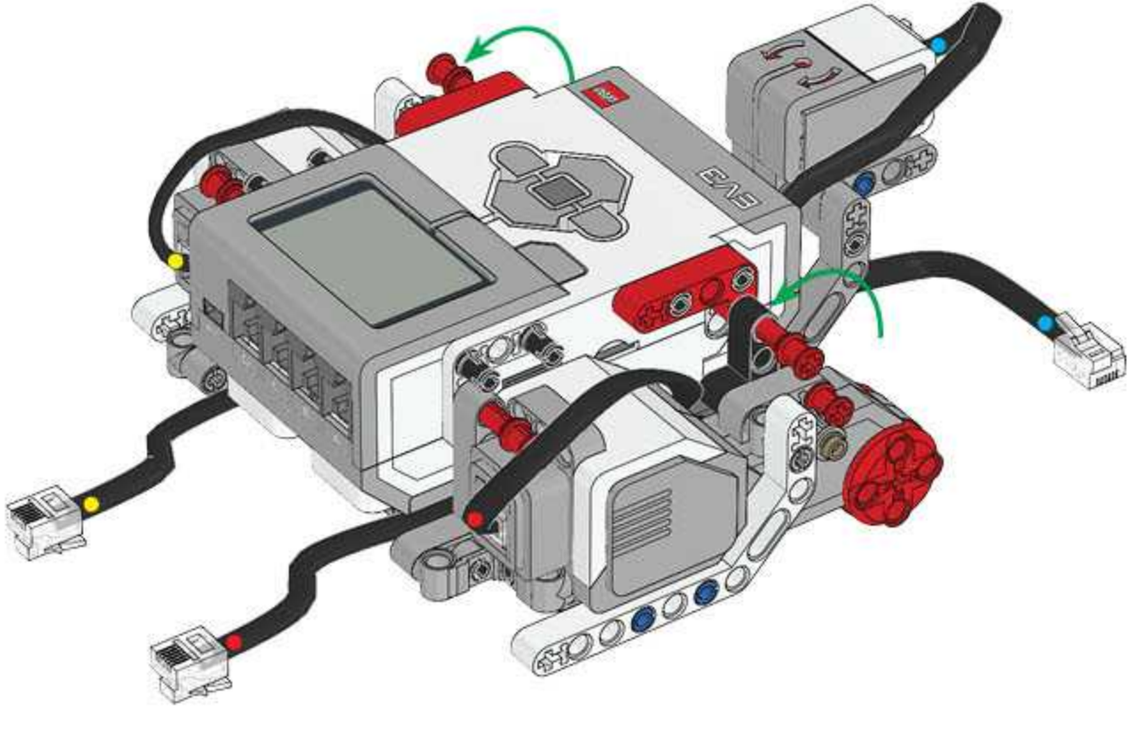
EV3

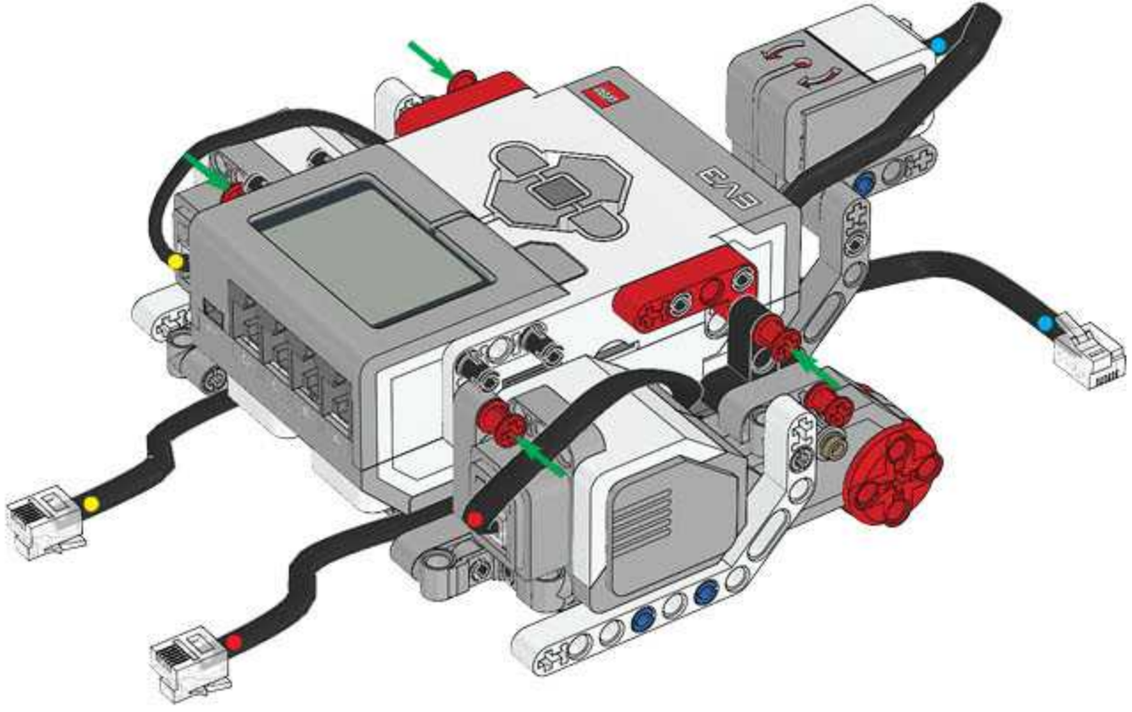
EV3

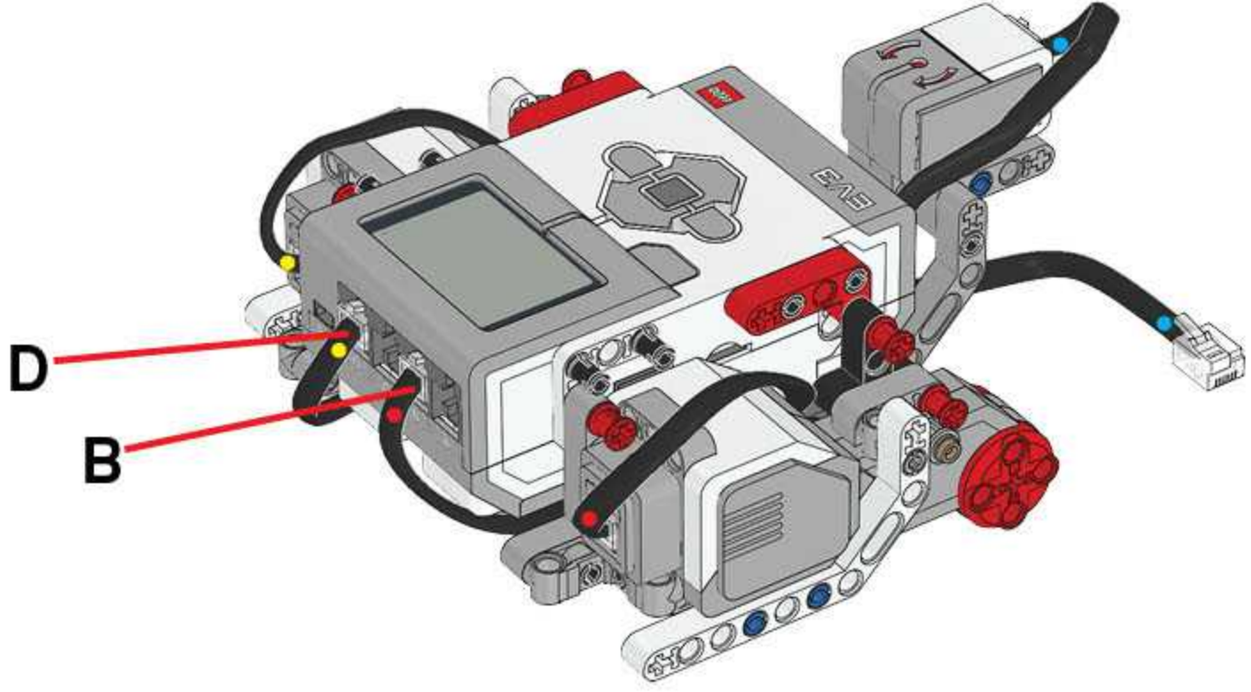
D
B

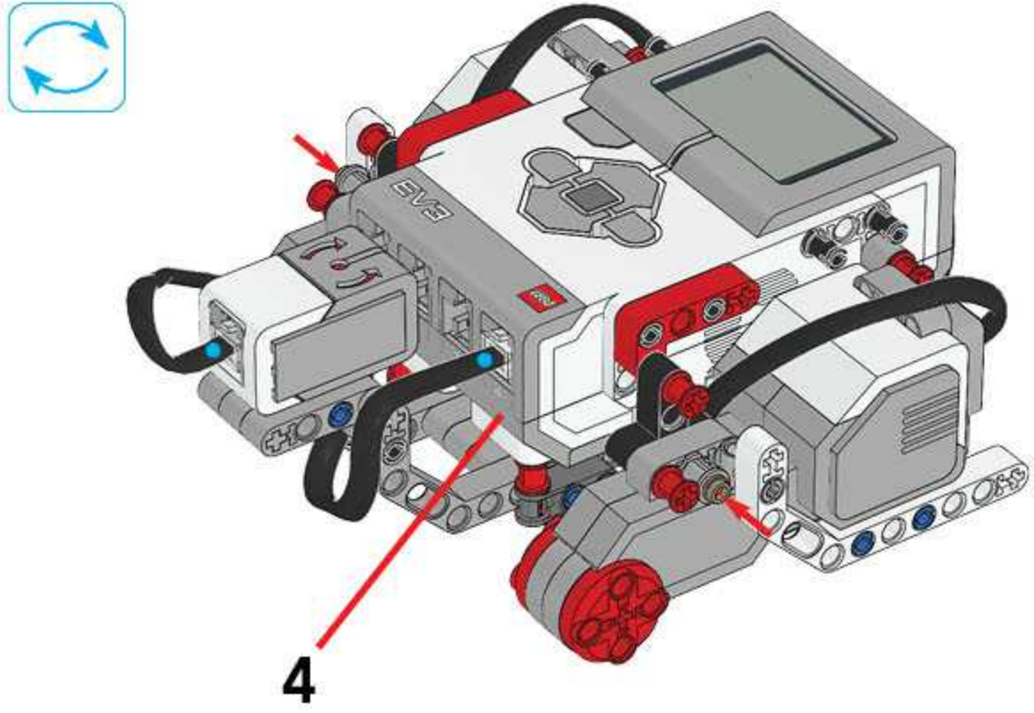
4

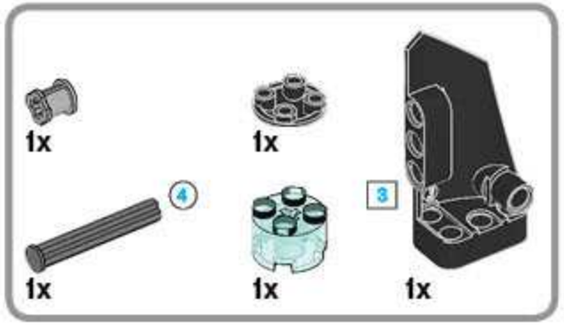

37

1

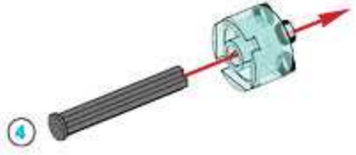

2

3

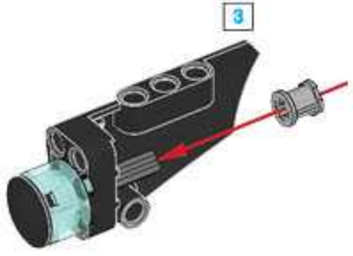

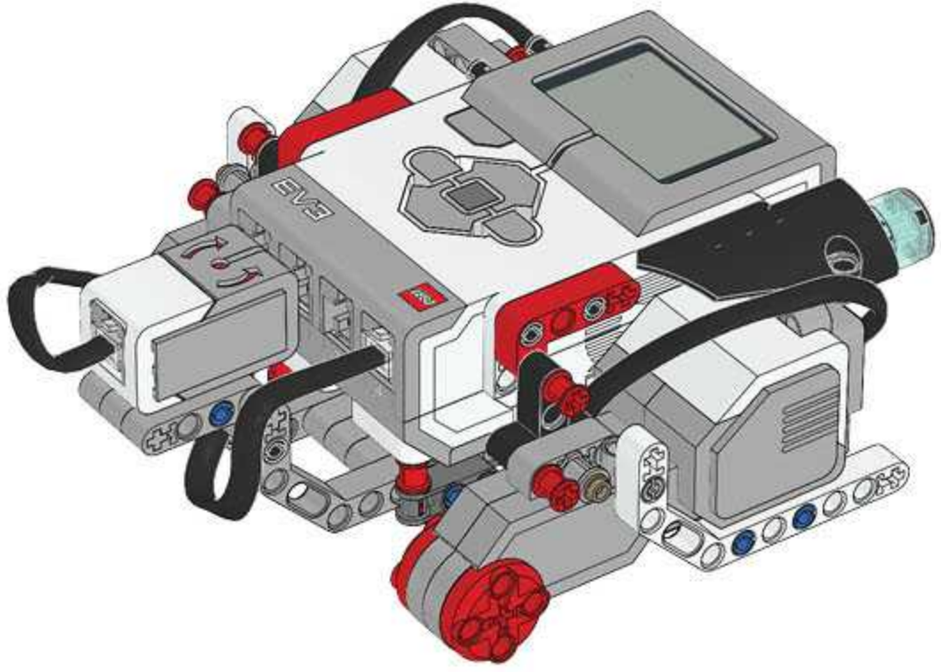
EV3

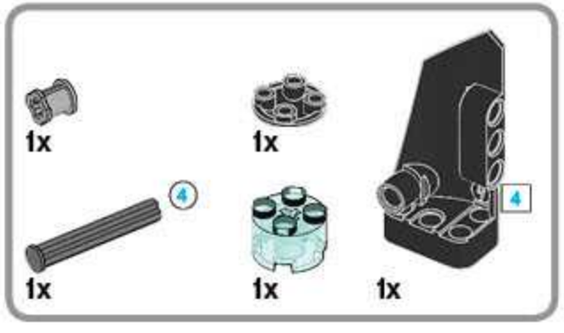

39

1

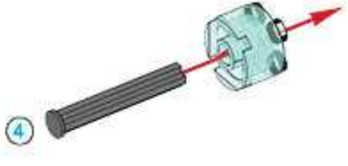

2

3

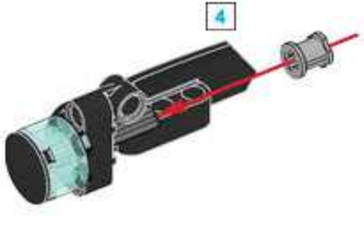

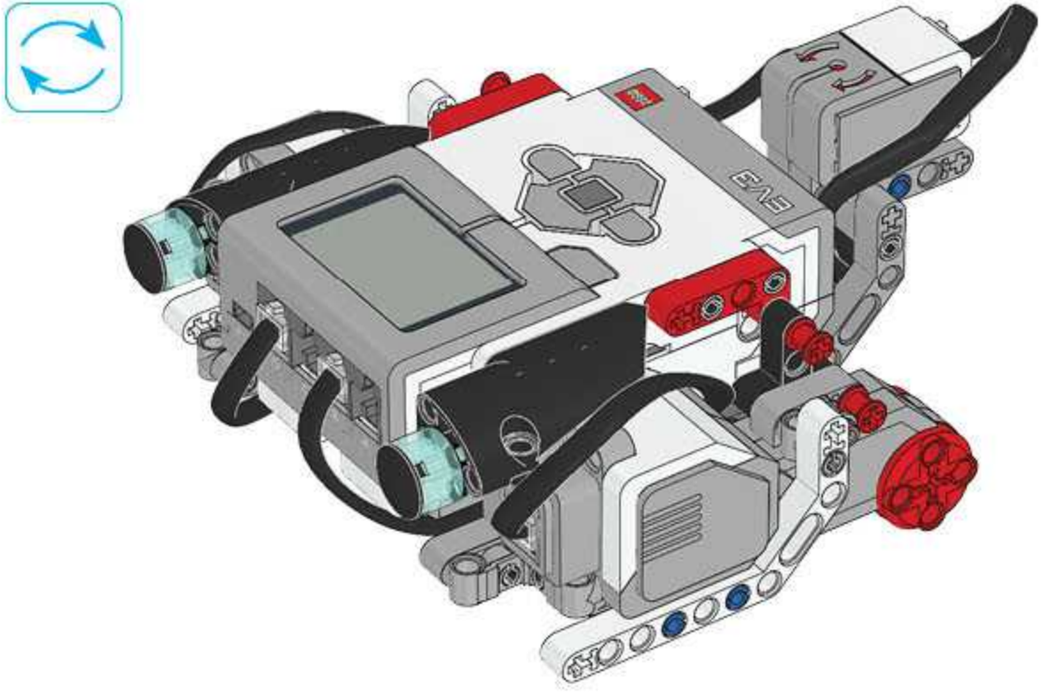
EV3

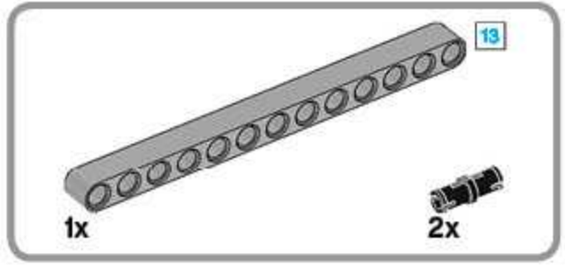

41

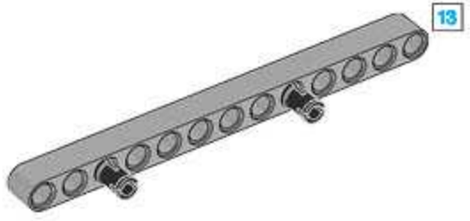

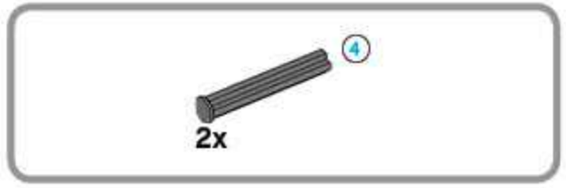

42

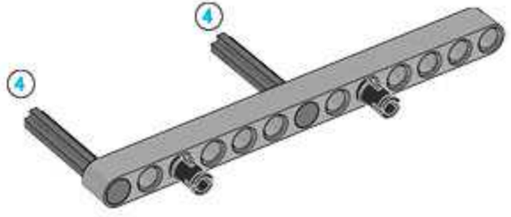

43

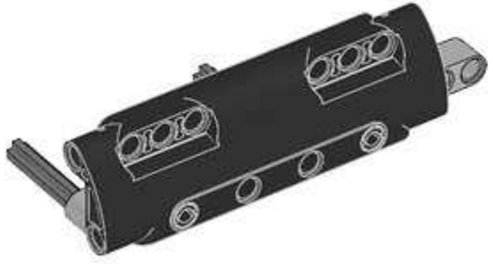

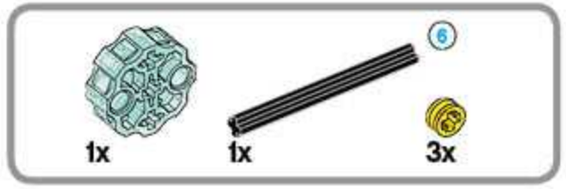

44

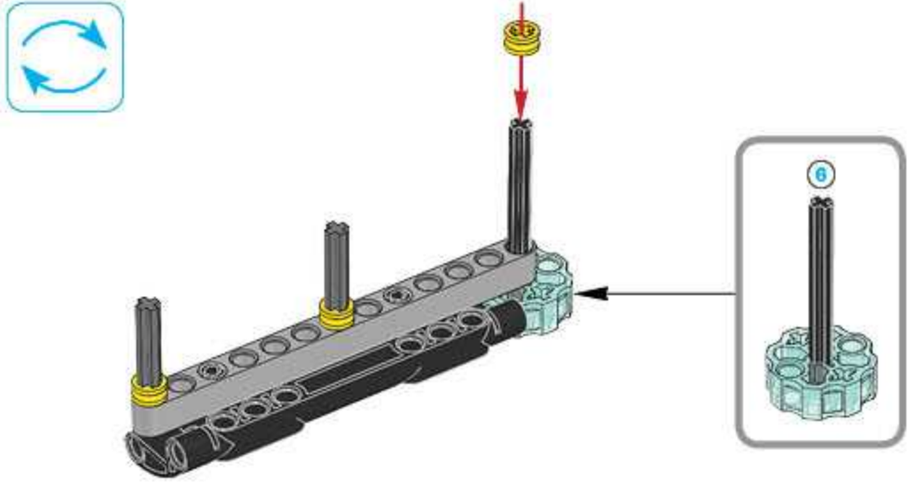

45

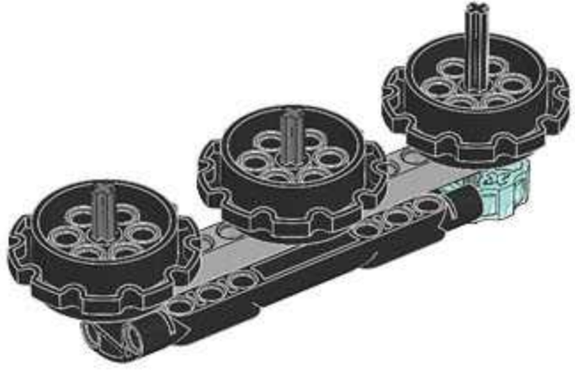

46

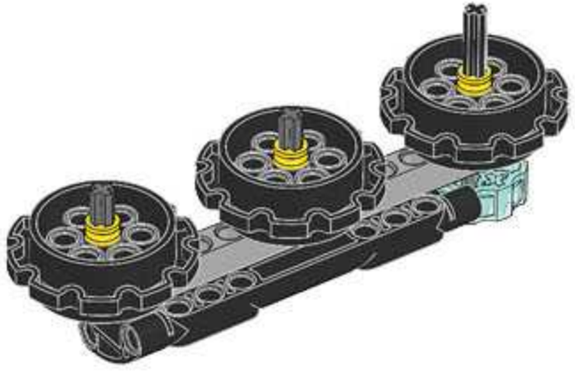

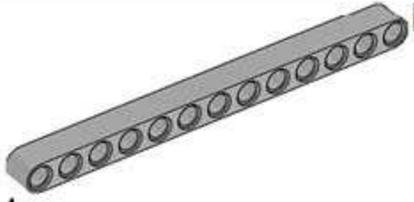

47

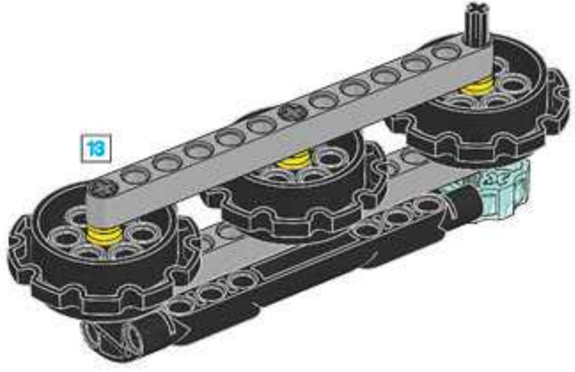

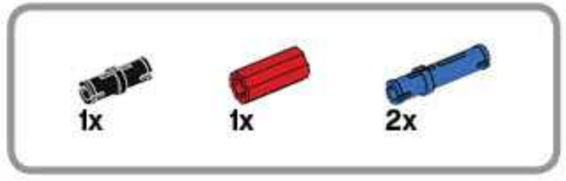

48

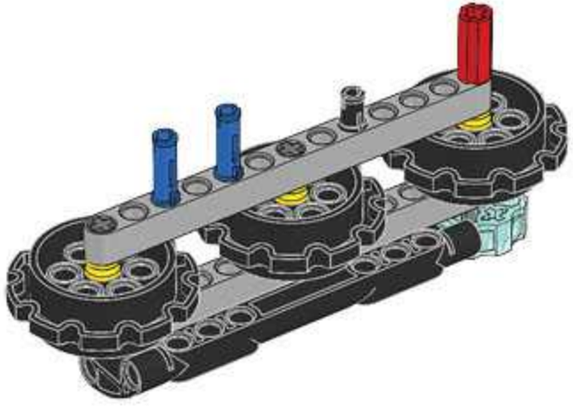

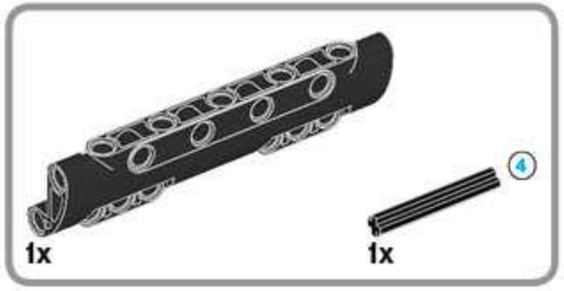

49

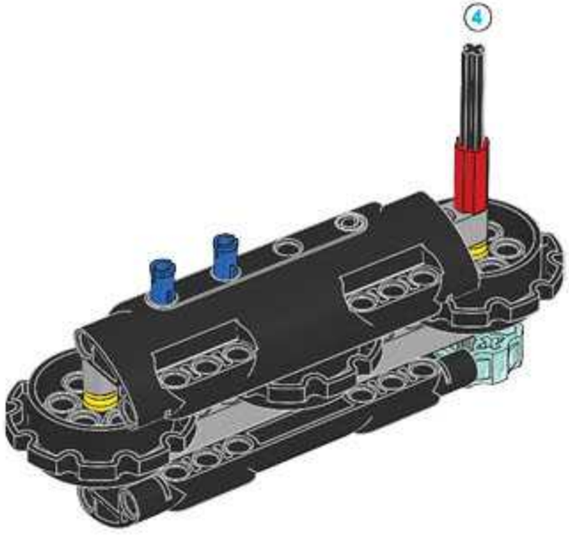

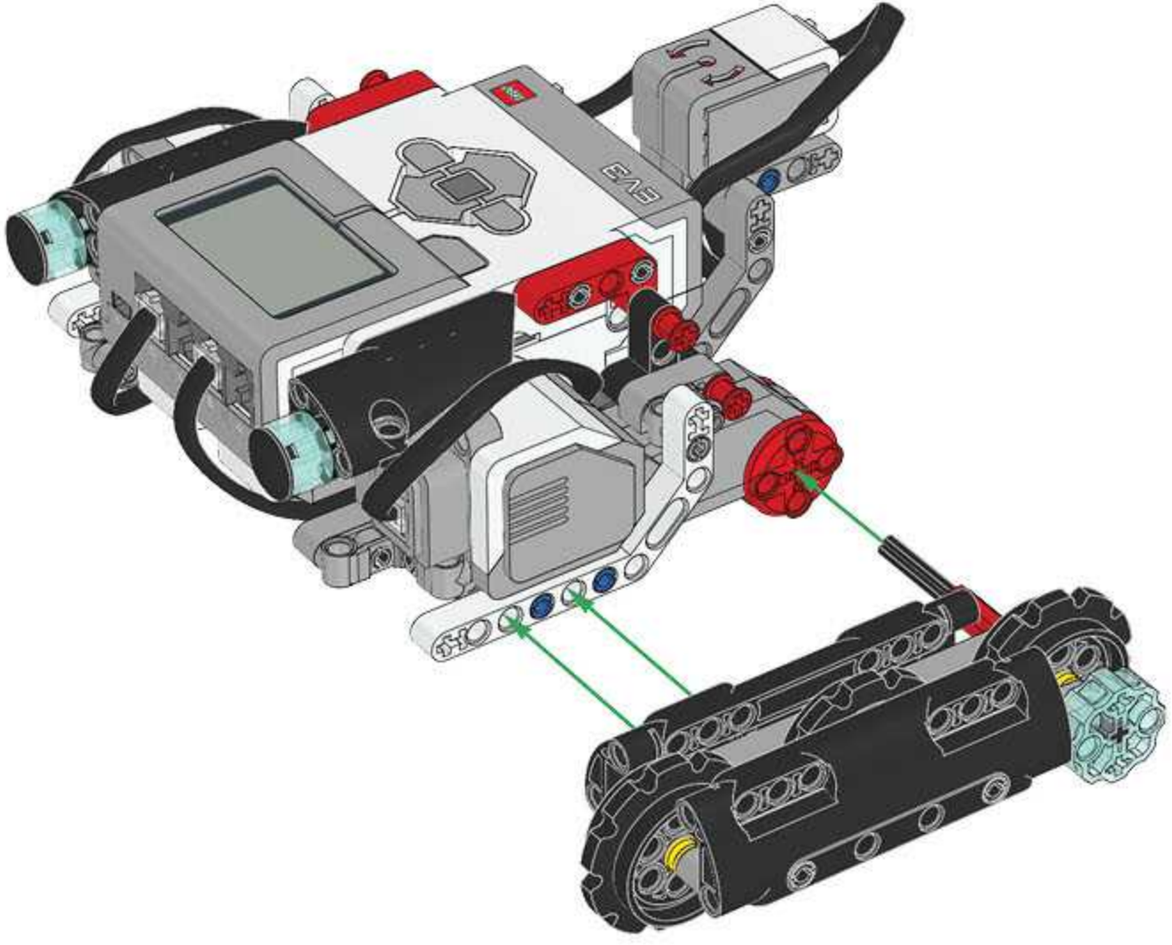
EV3

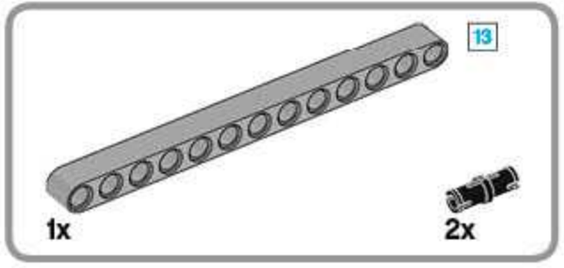
13
1x
2x

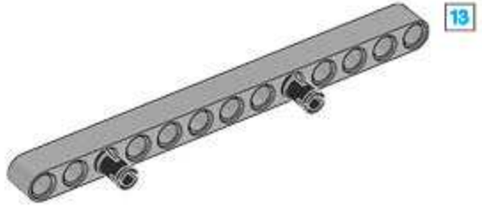
13

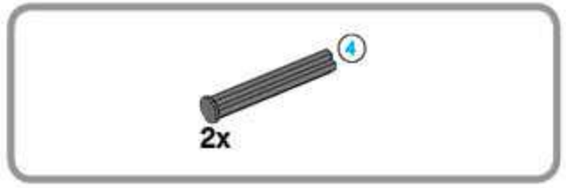

52

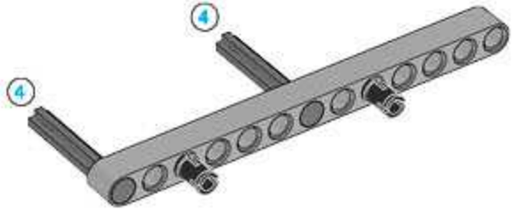

53

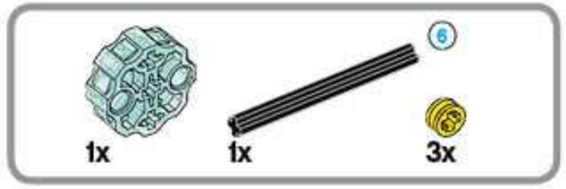

54

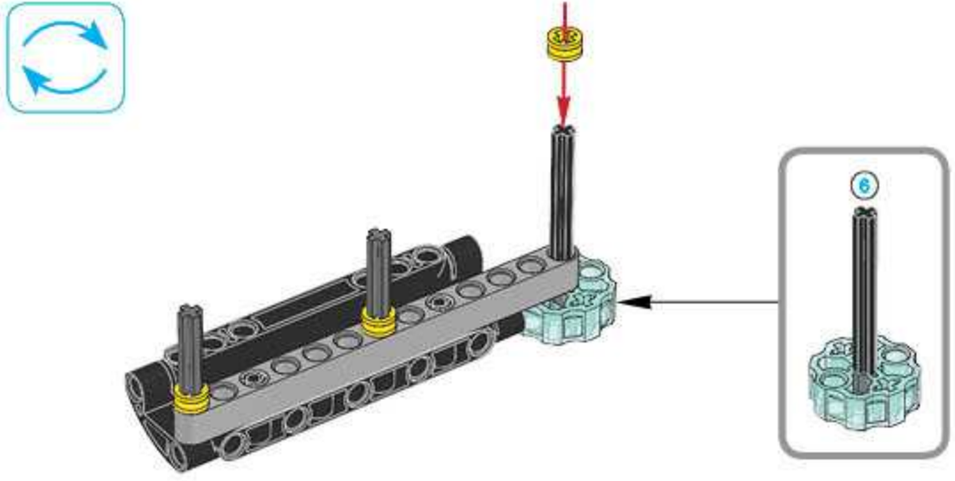

55

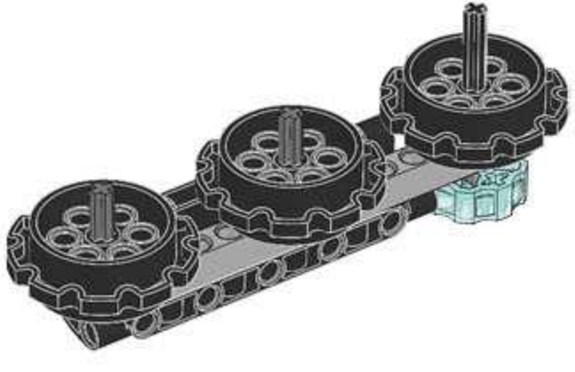

56

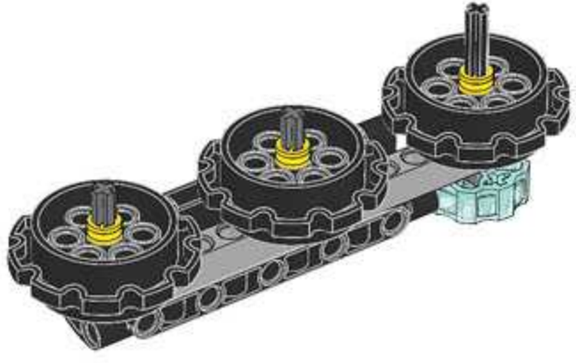

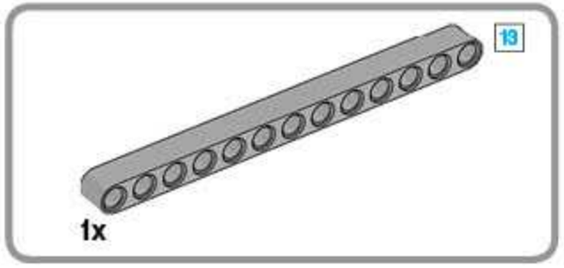

57

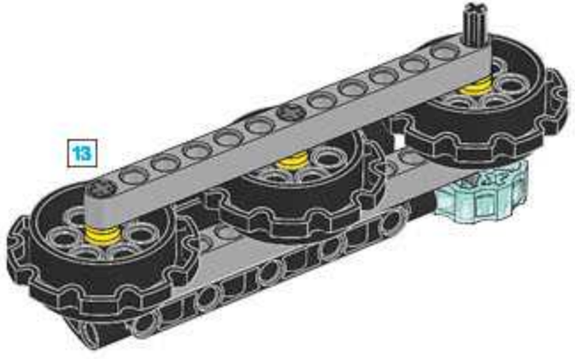

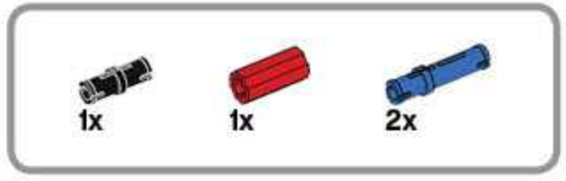

58

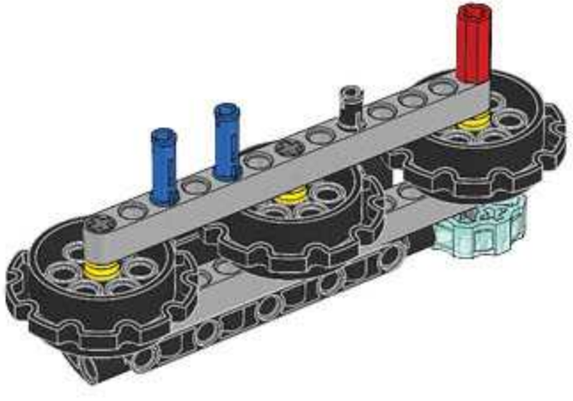

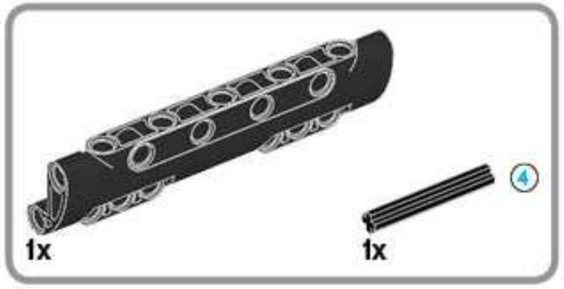

59

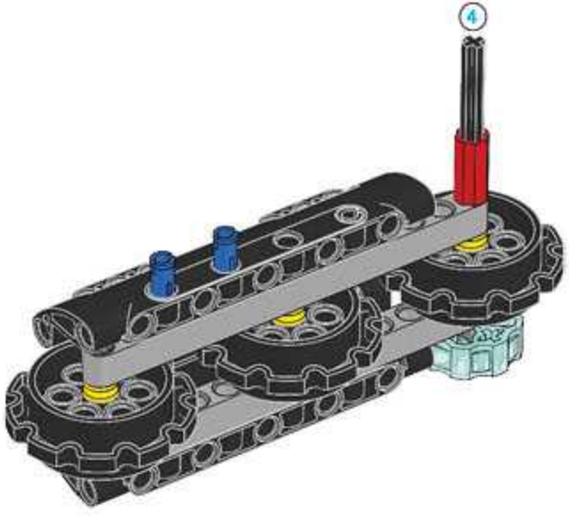

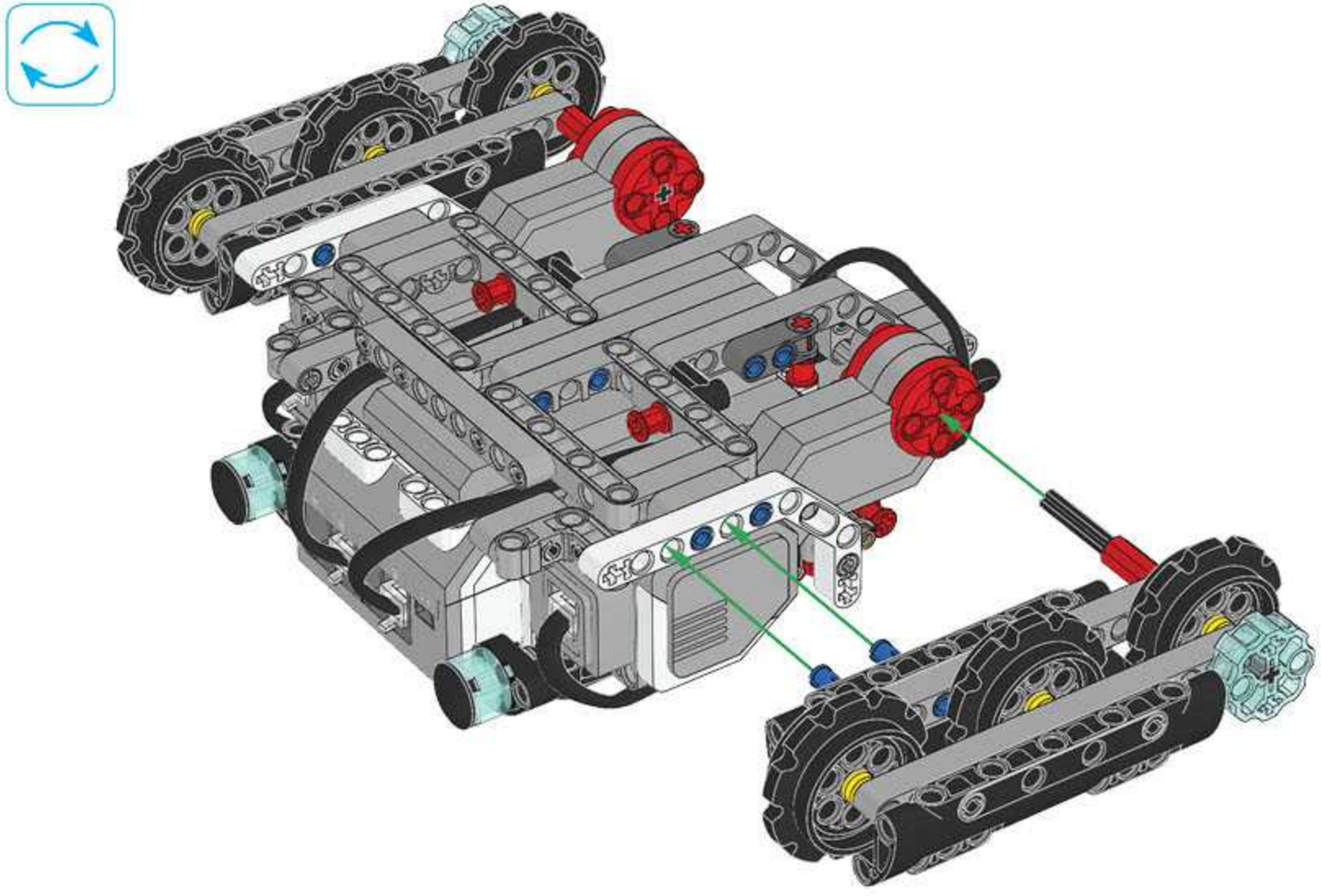

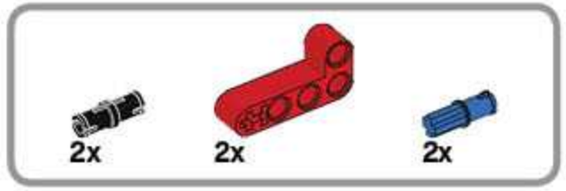

61

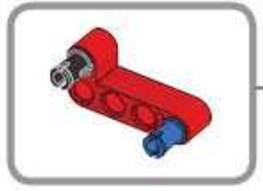

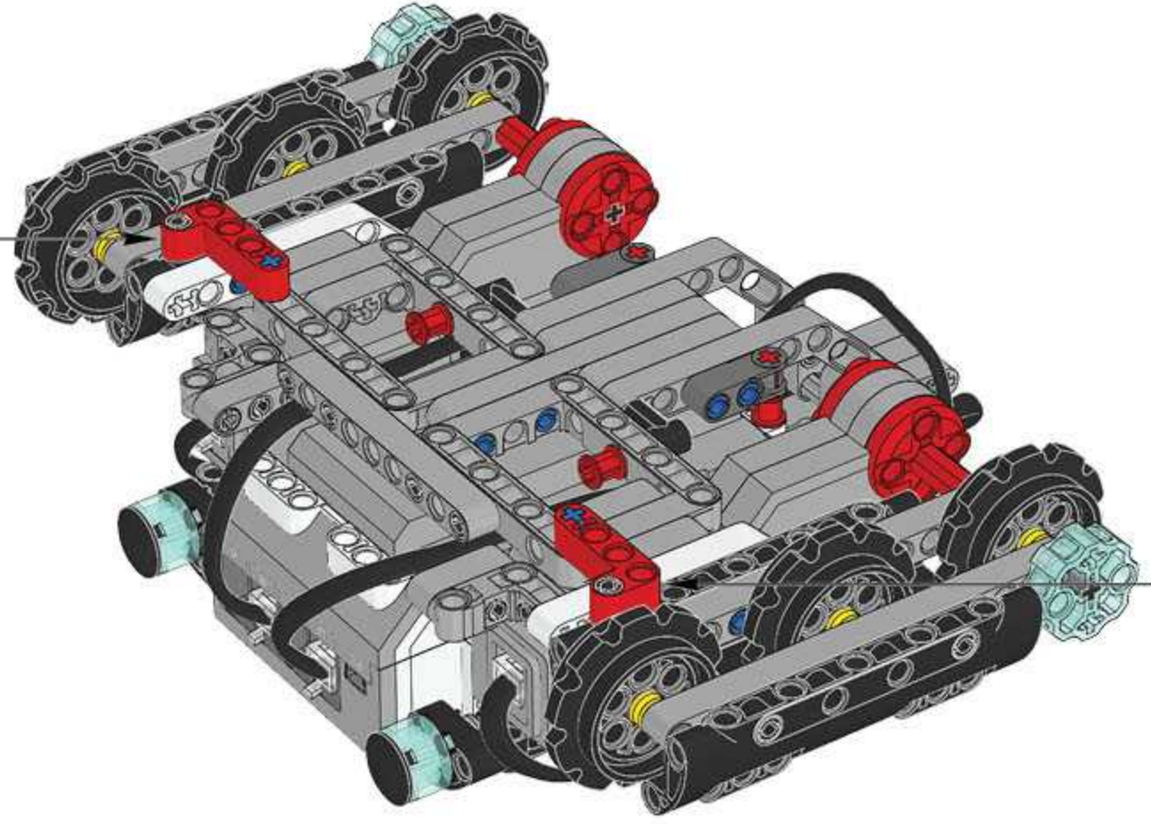

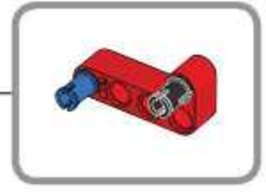

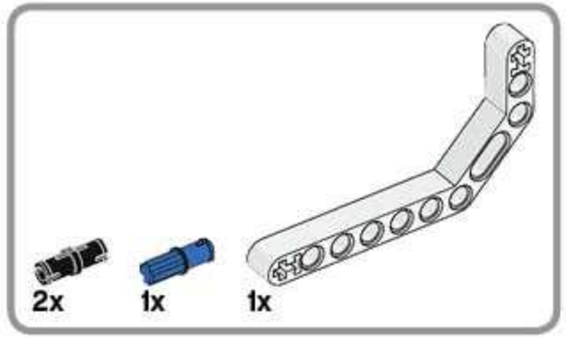

62

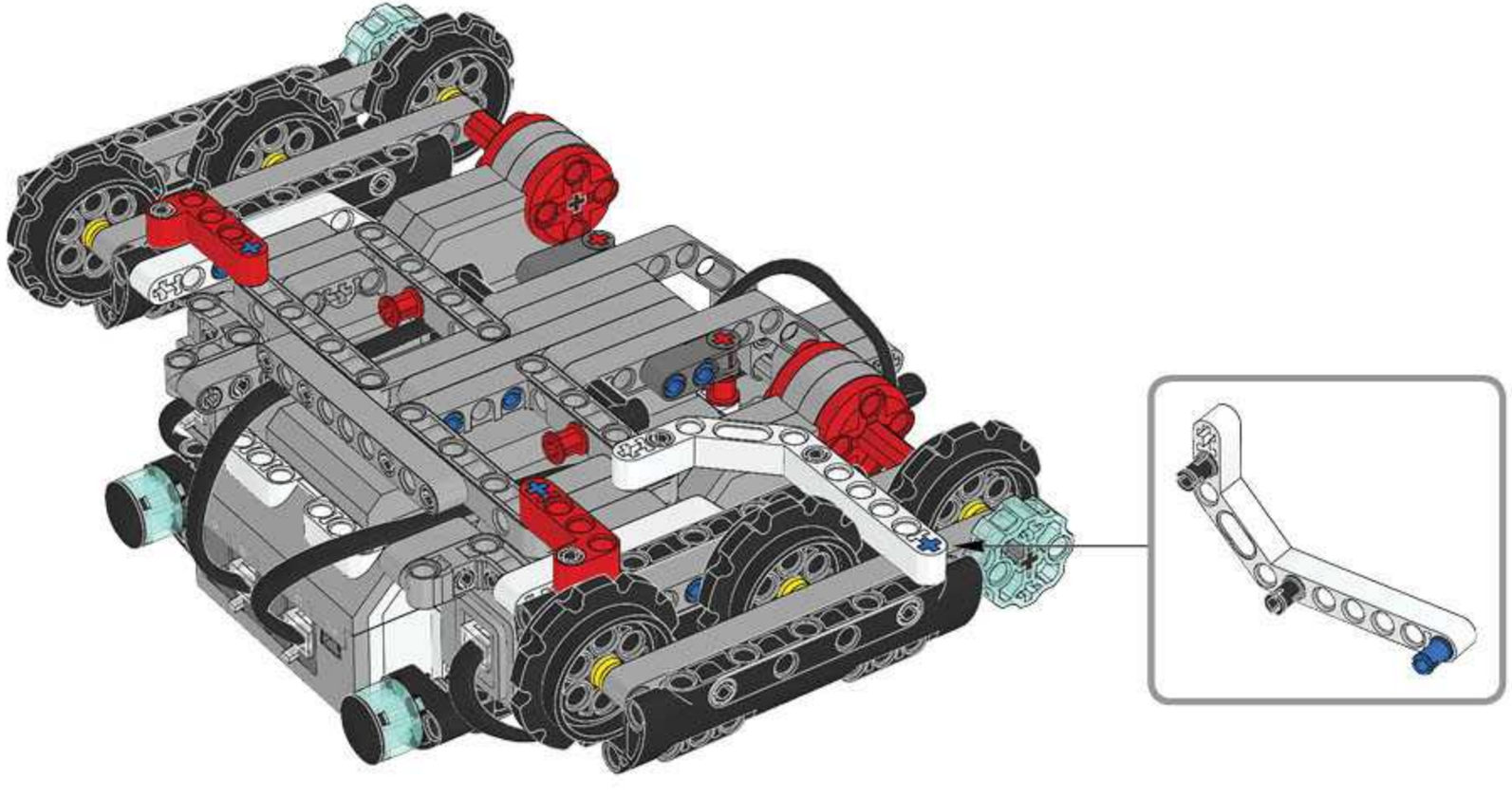

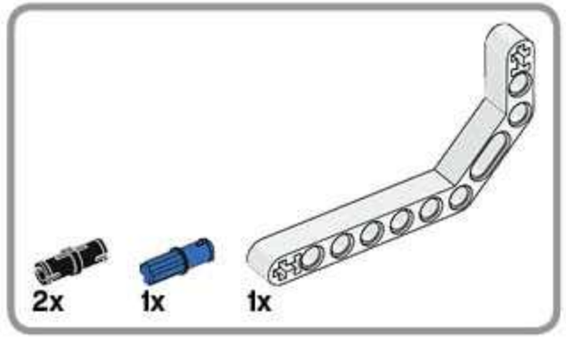

63

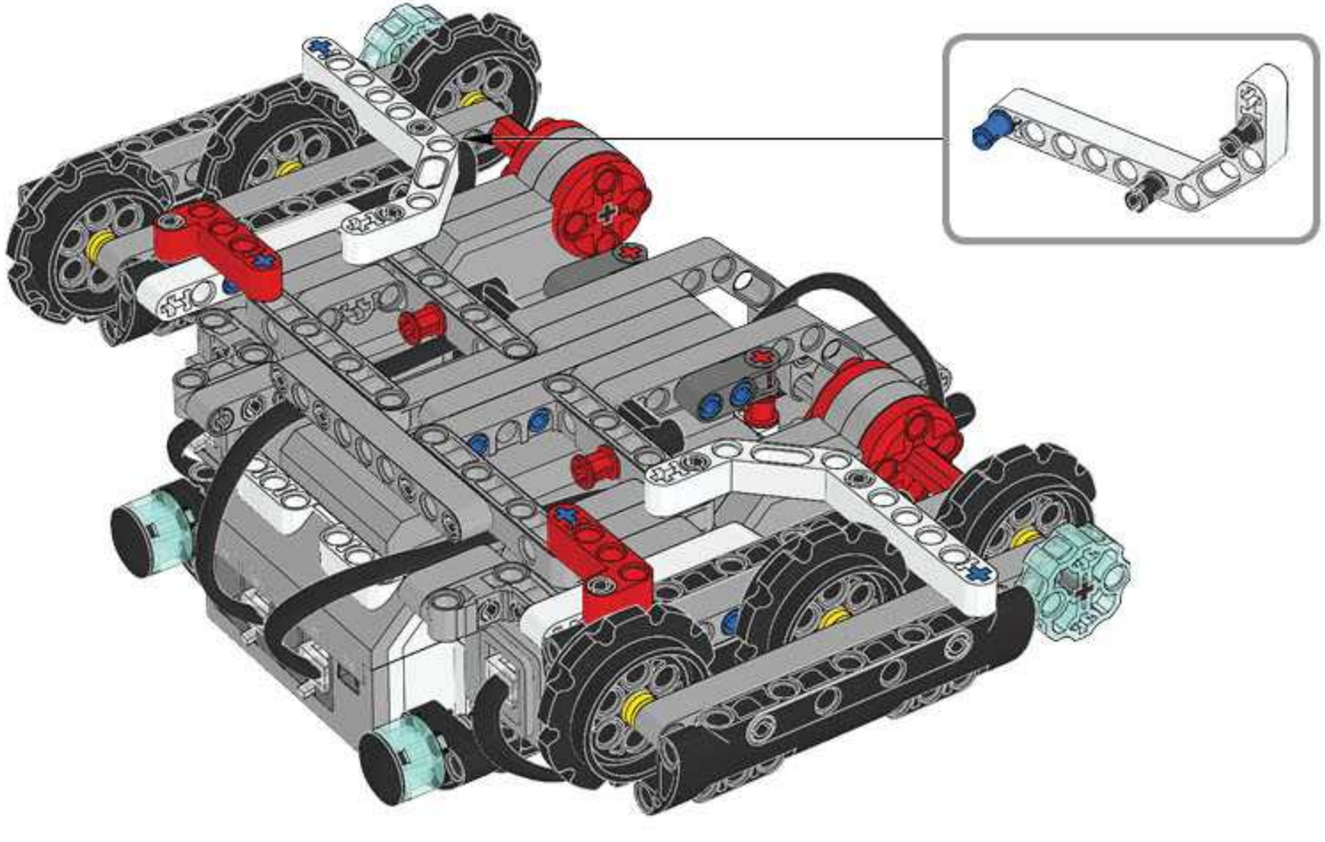

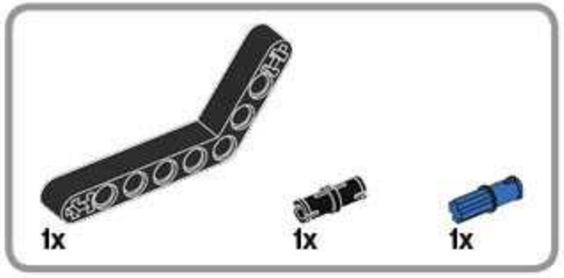

64

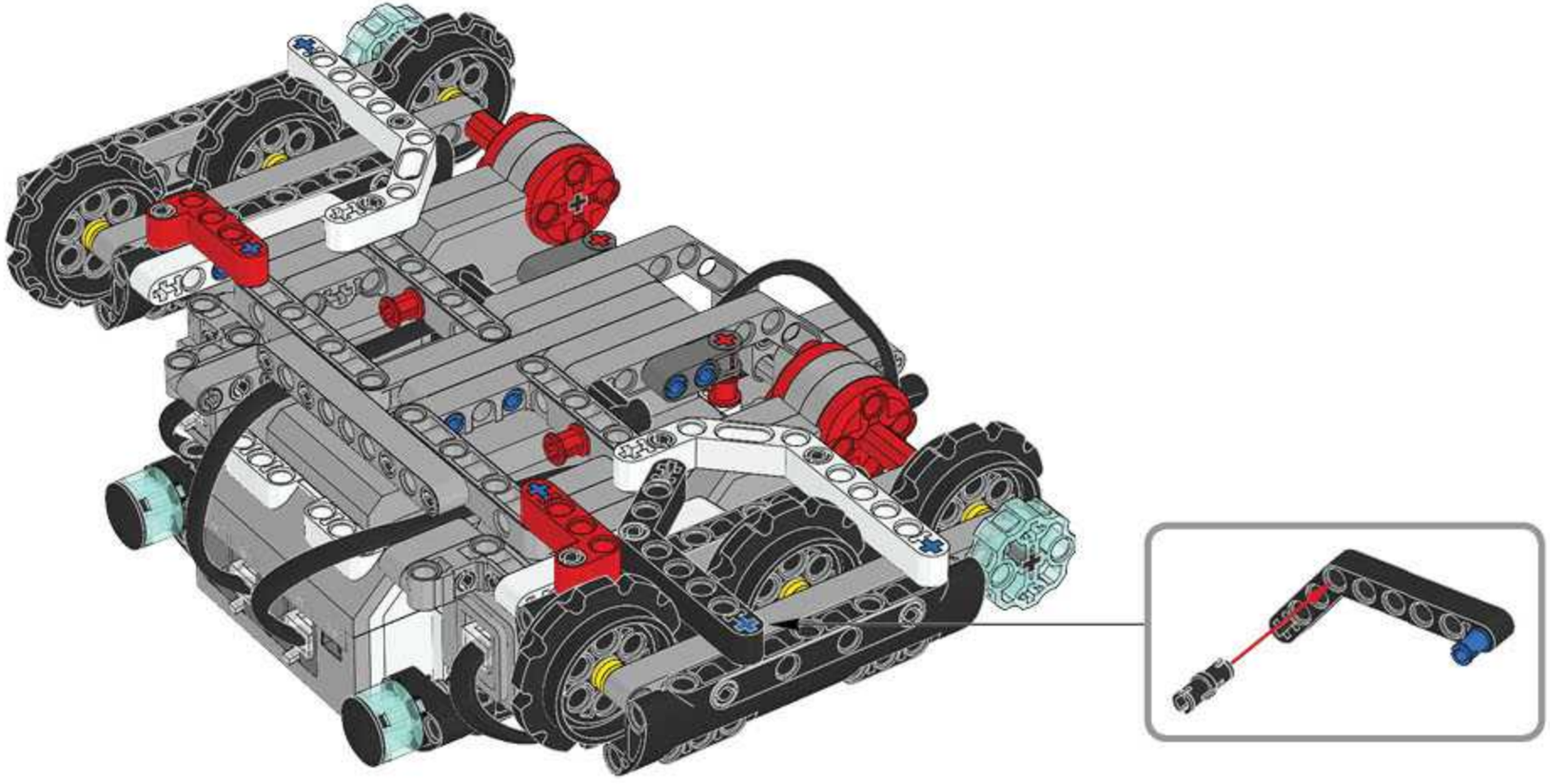

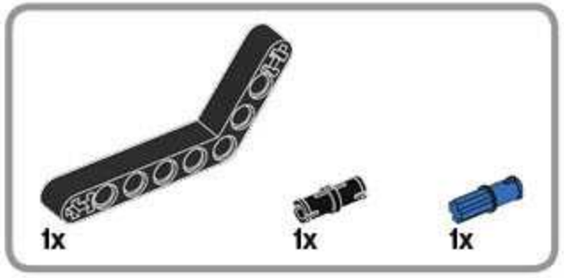

65

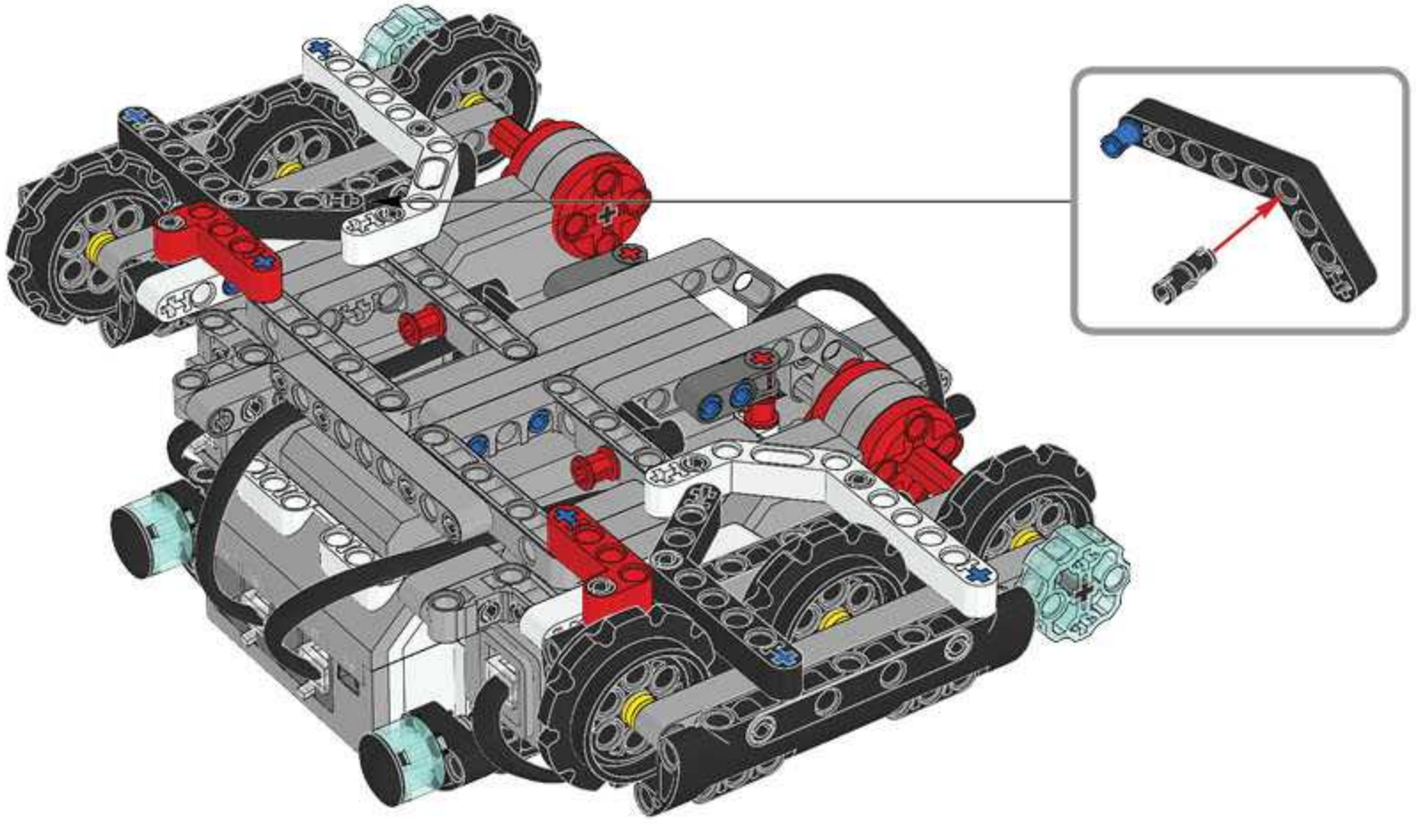

66

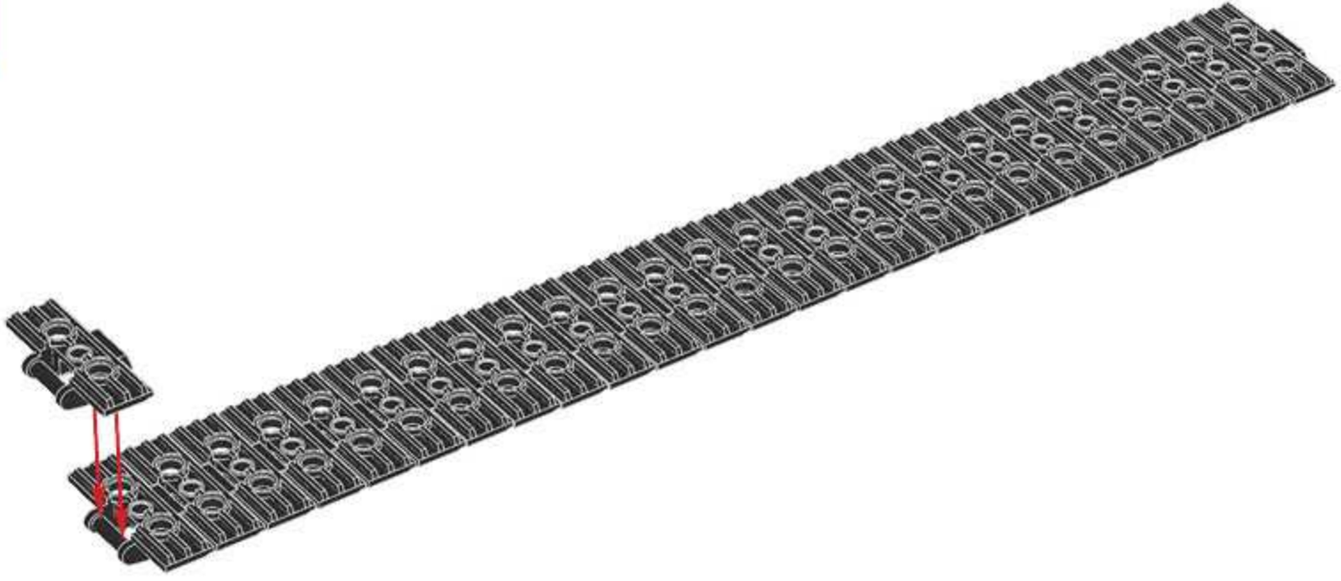

67

2x

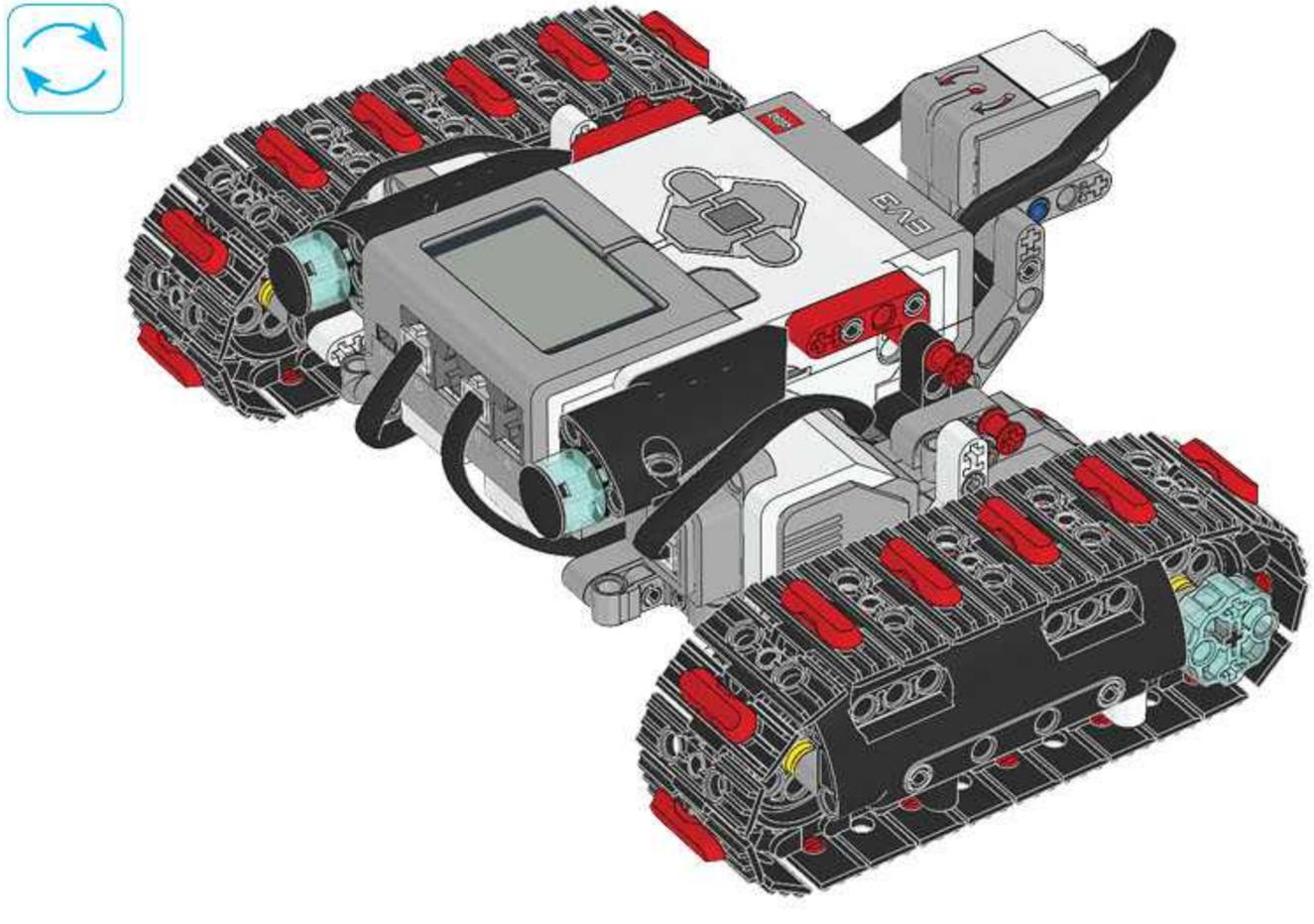
EV3

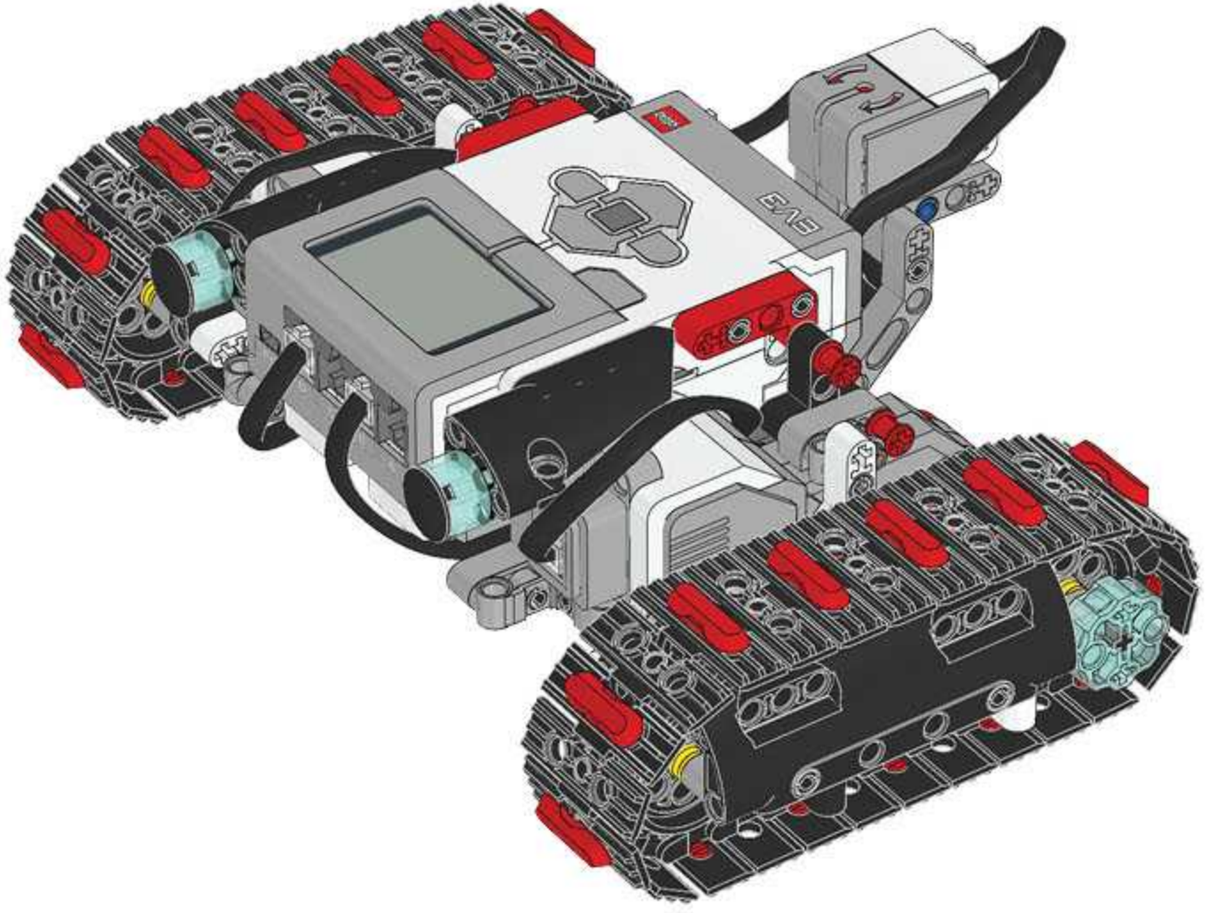
EV3

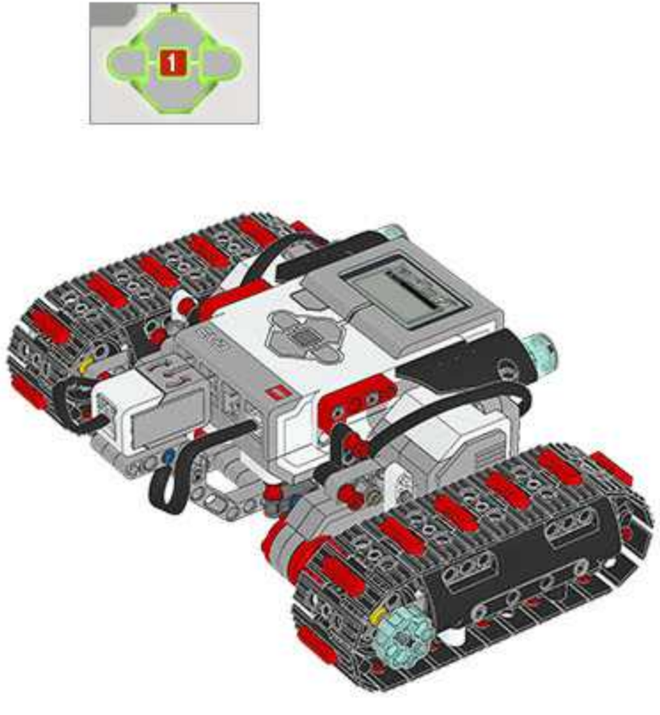

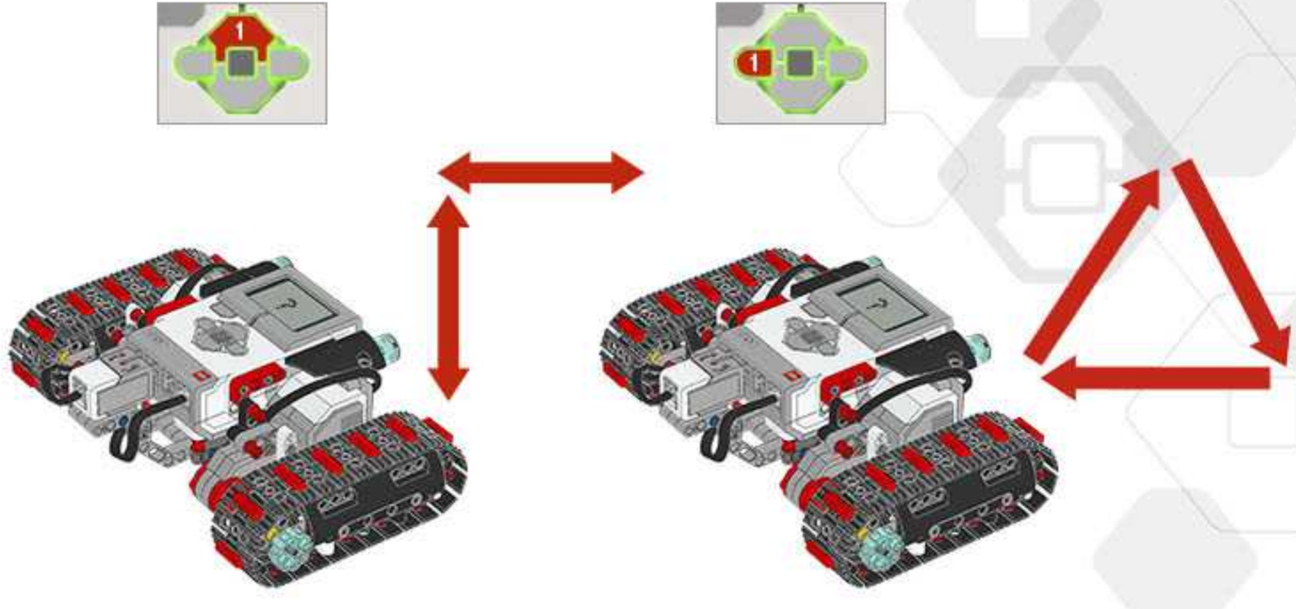

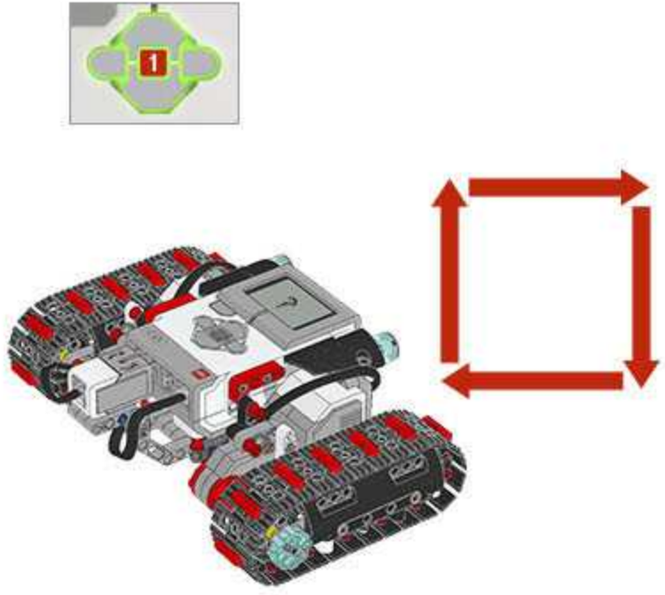

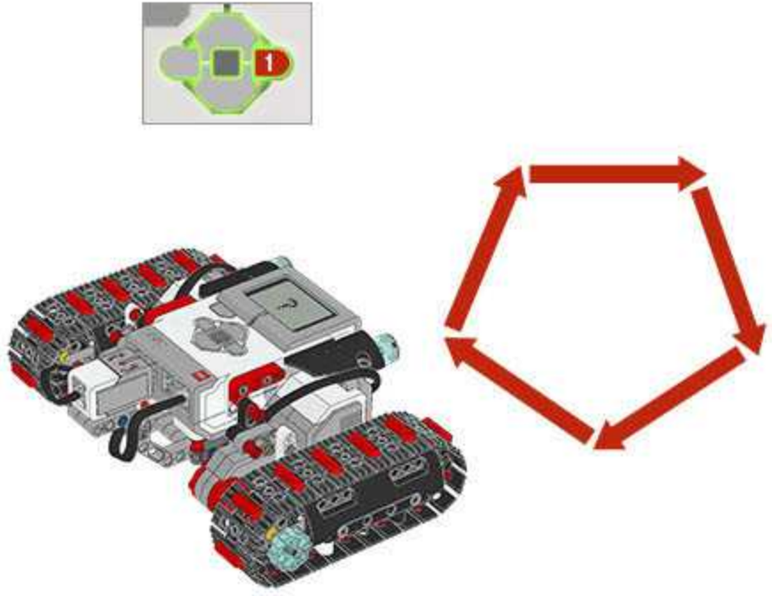

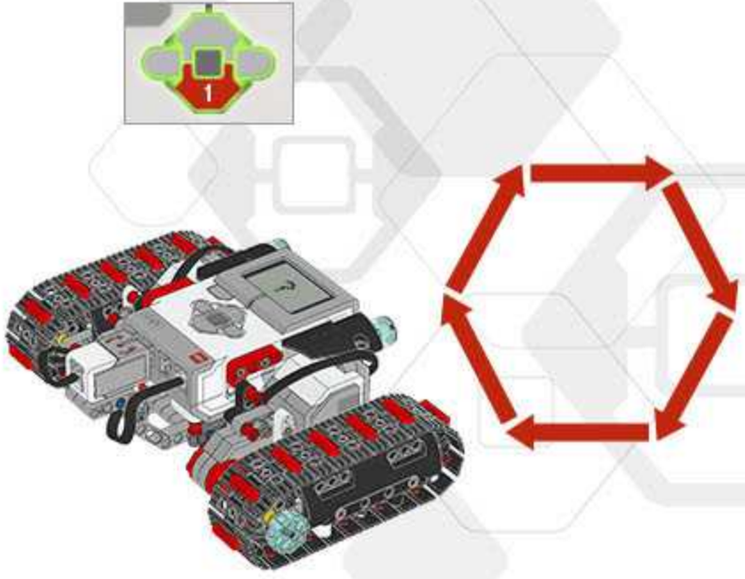

LEGO, the LEGO logo, MINDSTORMS and the MINDSTORMS logo are trademarks of the/sont des marques de commerce de/son marcas registradas de LEGO Group. ©2013 The LEGO Group.