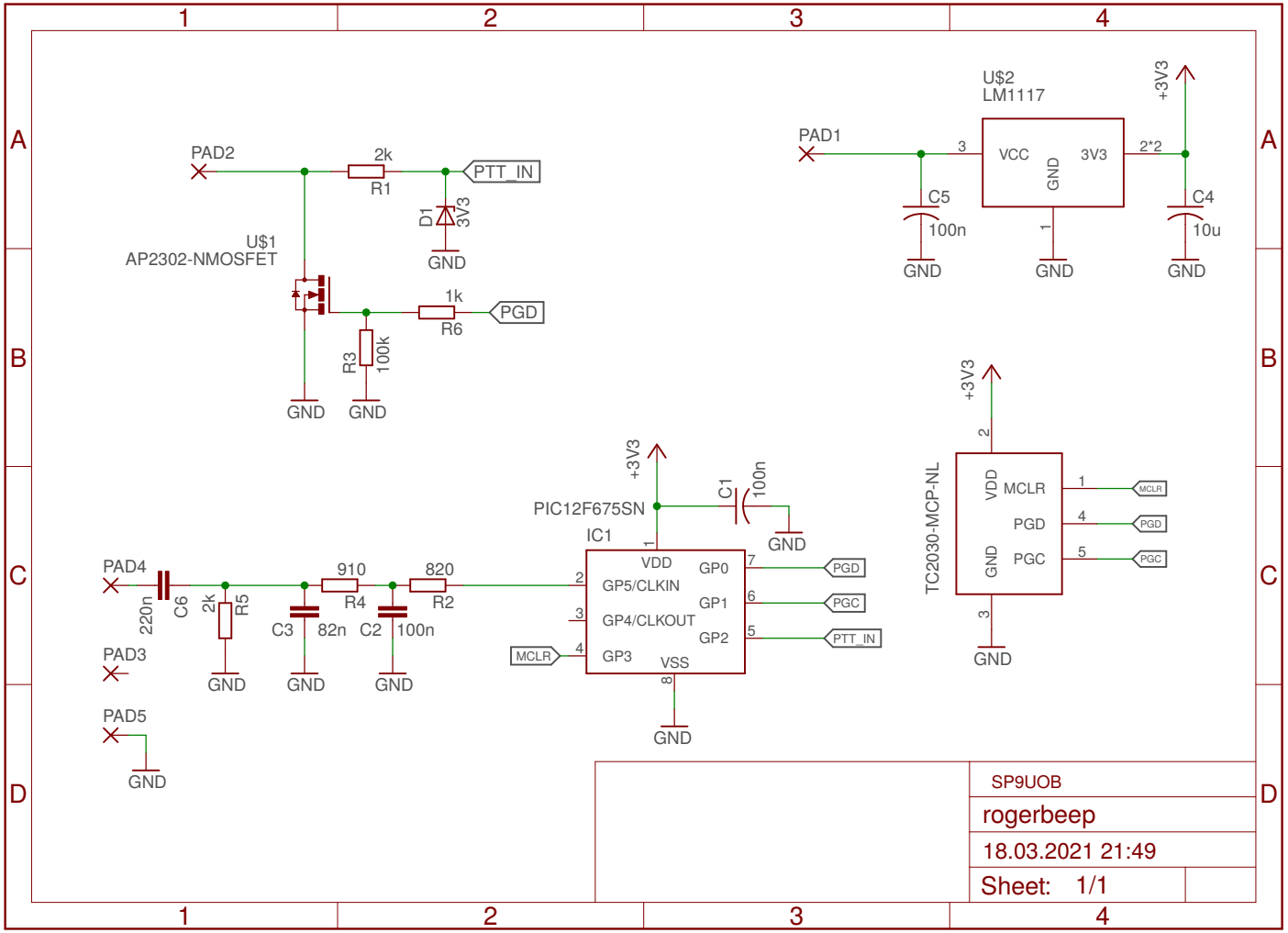
PAD2
2k
R1
PTT_IN
D1
3V3
GND
U$1
AP2302-NMOSFET
1k
R6
PGD
R3
100k
GND
GND
U$2
LM1117
+3V3
PAD1
3
VCC
GND
3V3
2*2
C5
100n
C4
10u
GND
GND
GND
+3V3
2
VDD
MCLR
1
MCLR
PGD
4
PGD
GND
PGC
5
PGC
TC2030-MCP-NL
3
GND
+3V3
C1
100n
GND
PIC12F675SN
IC1
1
VDD
GP0
7
PGD
2
GP5/CLKIN
GP1
6
PGC
3
GP4/CLKOUT
GP2
5
PTT_IN
MCLR
4
GP3
VSS
8
GND
PAD4
220n
C6
2k
R5
910
R4
820
R2
C3
82n
C2
100n
GND
GND
GND
PAD3
PAD5
GND
SP9UOB
rogerbeep
18.03.2021 21:49
Sheet: 1/1