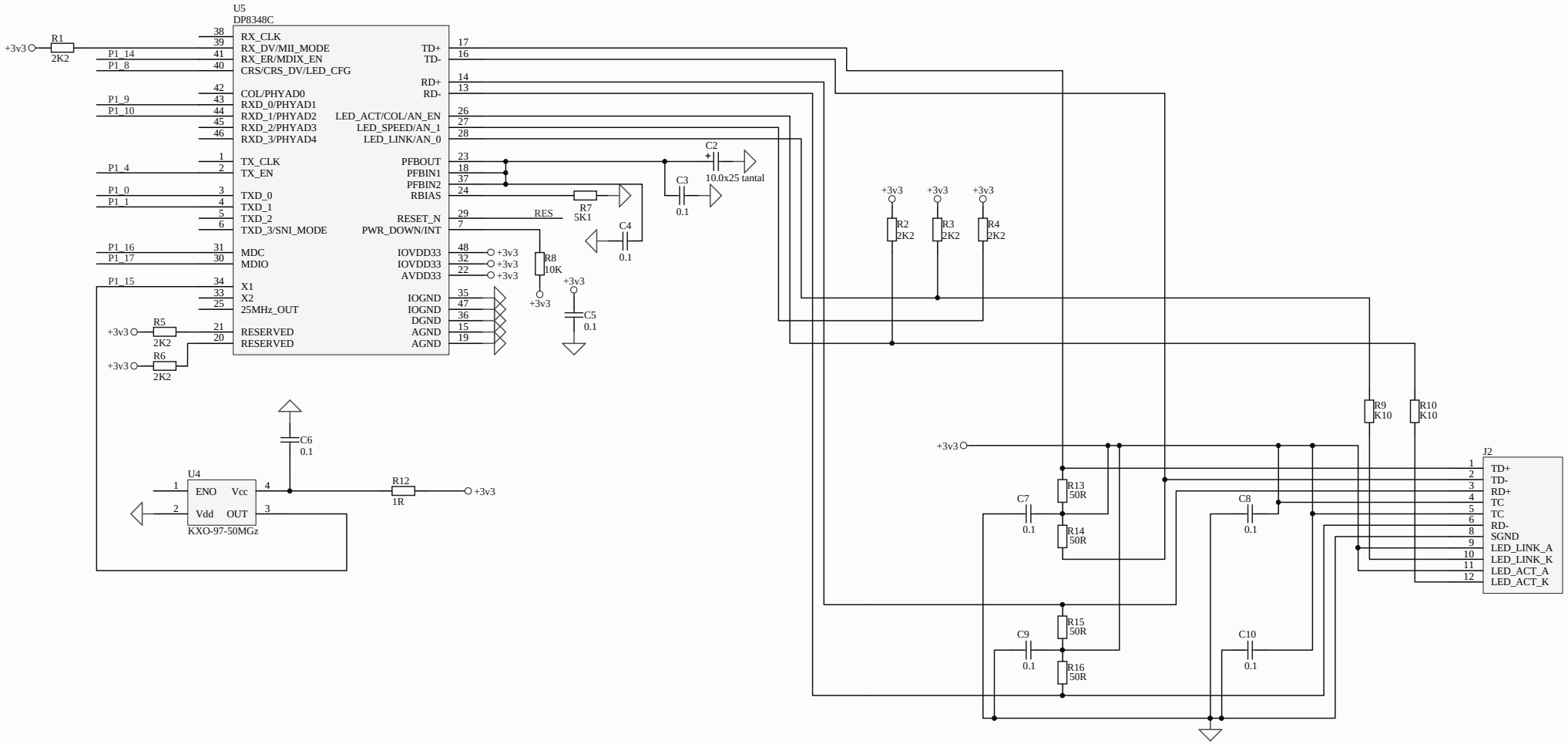

Title		
Size B	Number	Revision
Date: 14.03.2012		Sheet of
File: C:\USERS\..\lan.SchDoc		Drawn By: