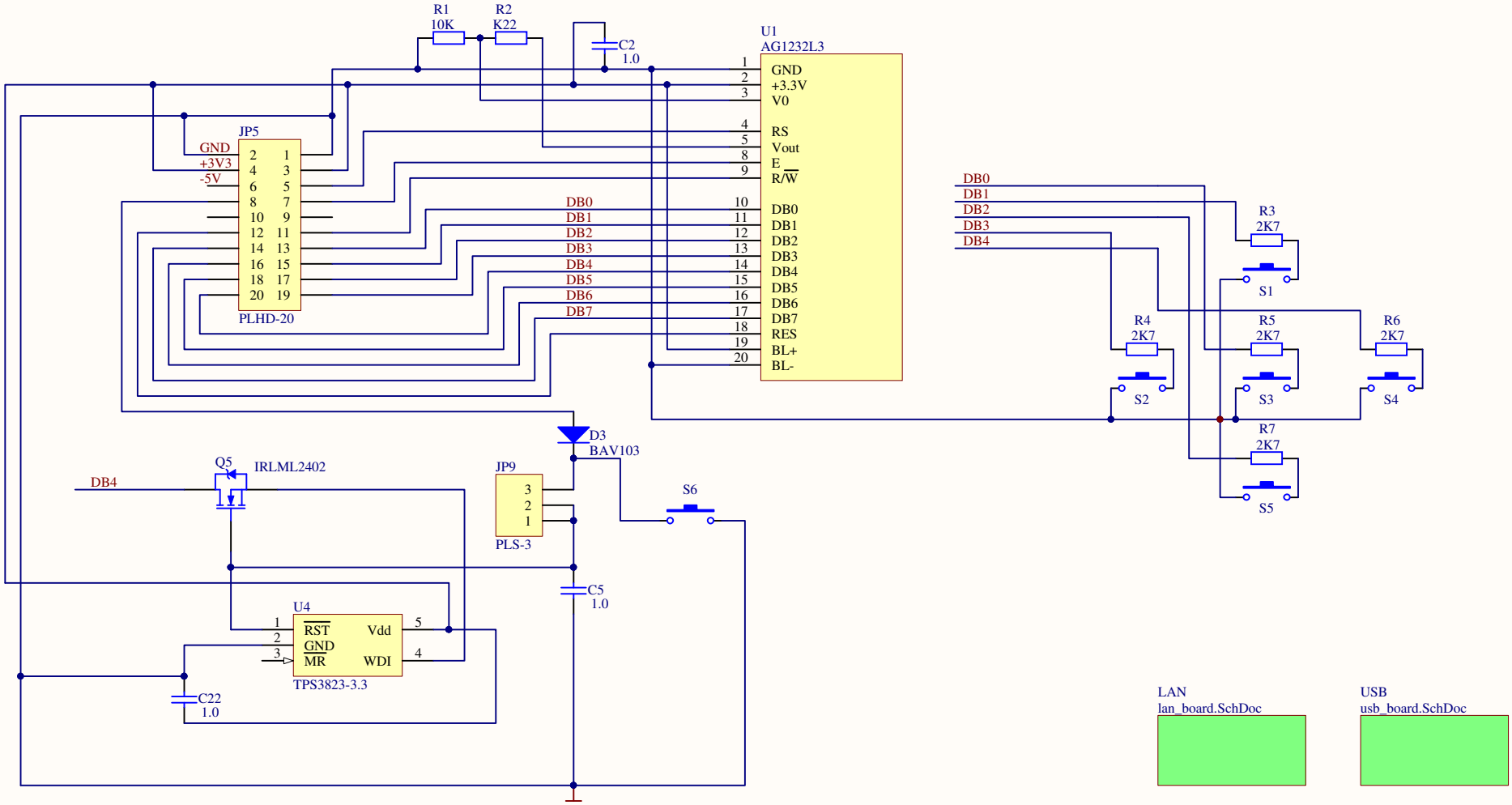

Title	УКУ207_13И	
Size A4	Number	Revision
Date: 28.03.2023		Sheet of
File: C:\Users\..\face_board.SchDoc		Drawn By: