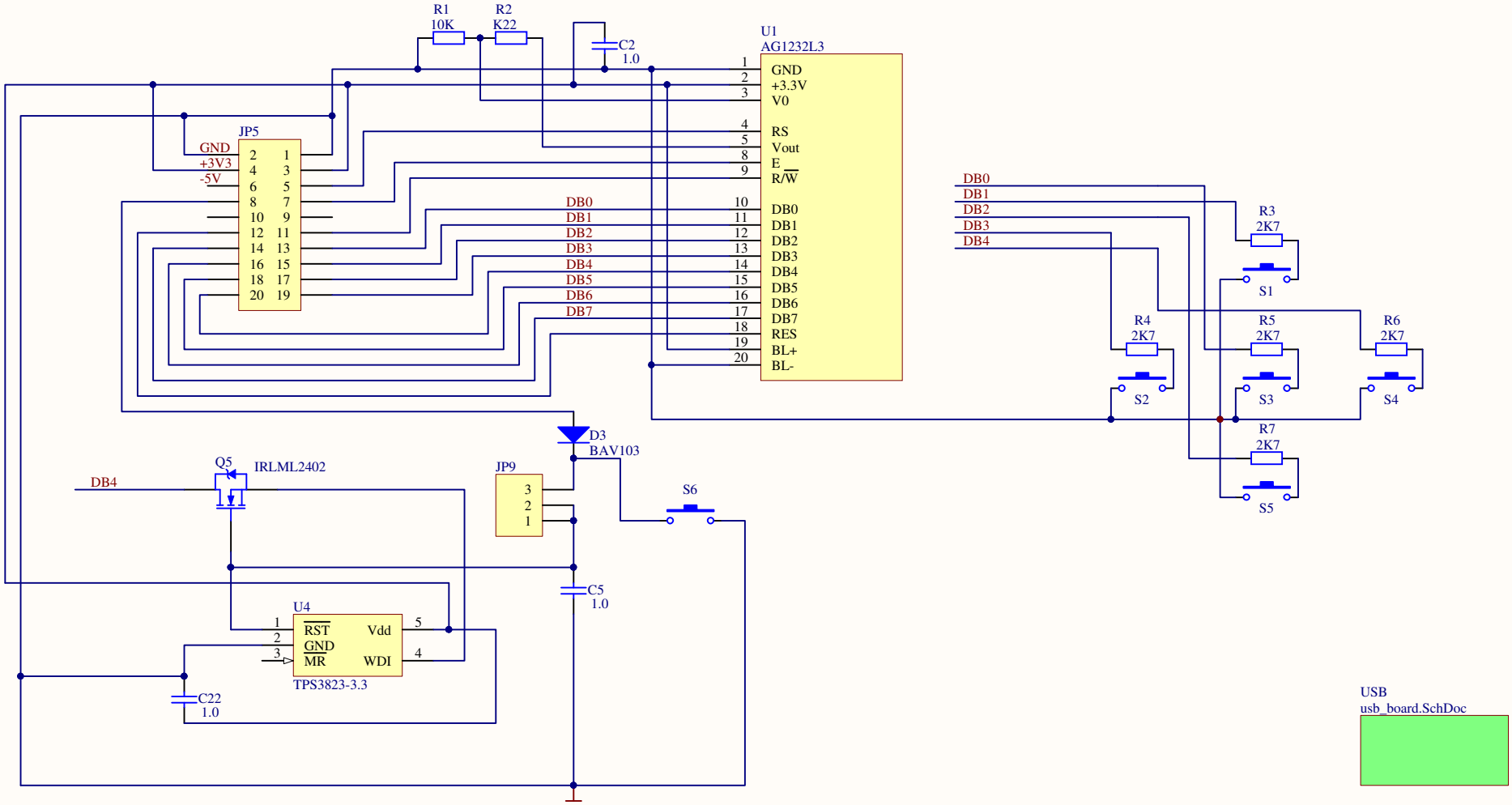

Title		
УКУ207_16И		
Size A4	Number	Revision
Date: 24.03.2023		Sheet of
File: C:\Users\..\face_board.SchDoc		Drawn By: