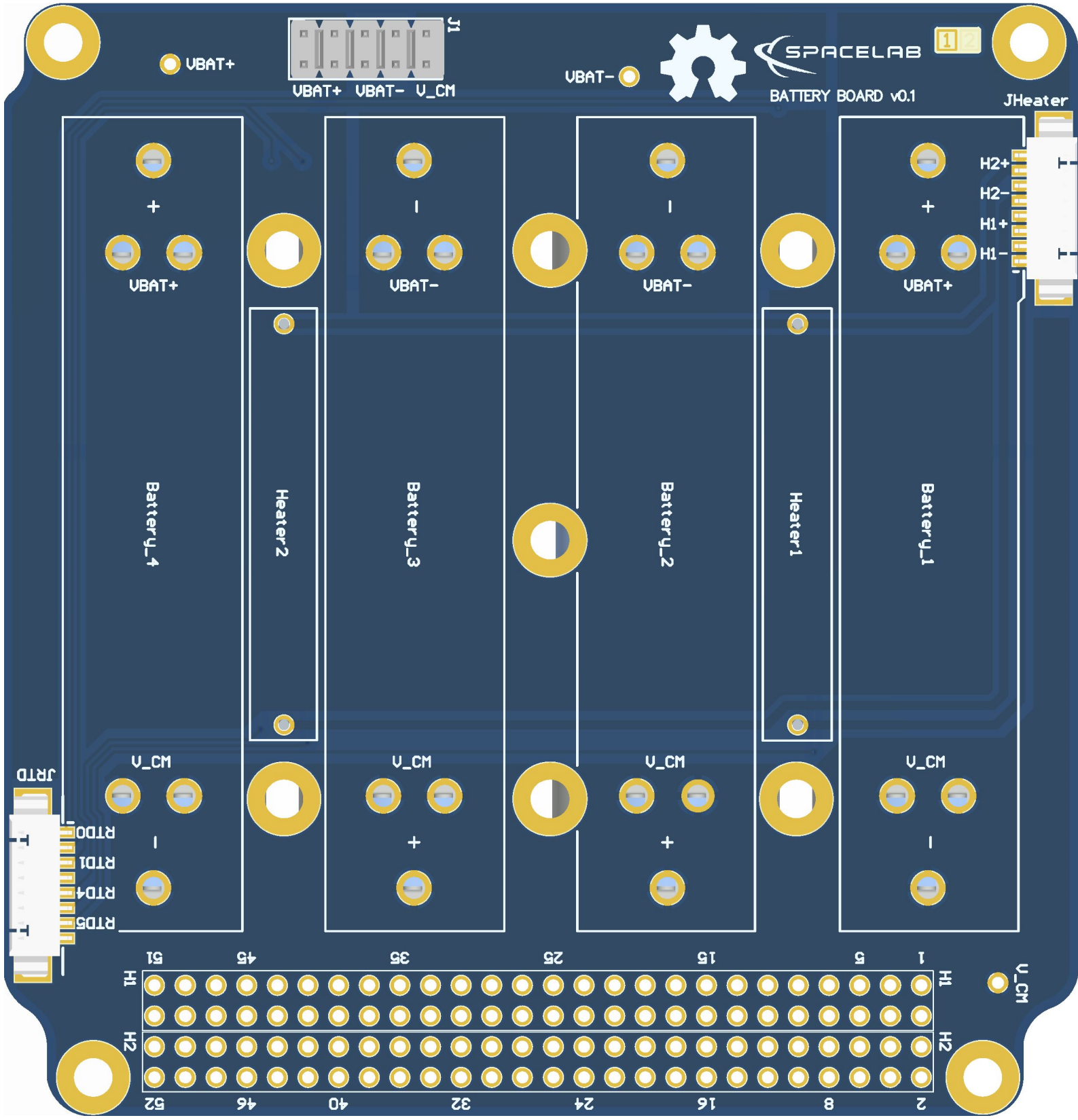
VBAT+
J1
VBAT+ VBAT- V_CM
VBAT-
SPACELAB
BATTERY BOARD v0.1
JHeater
H2+
H2-
H1+
H1-
VBAT+
VBAT-
VBAT-
VBAT+
Battery_4
Heater2
Battery_3
Battery_2
Heater1
Battery_1
V_CM
V_CM
V_CM
V_CM
JRTD
RTD0
RTD1
RTD4
RTD5
H1
H2
51
45
35
25
15
5
1
52
46
40
32
24
16
8
2
V_CM

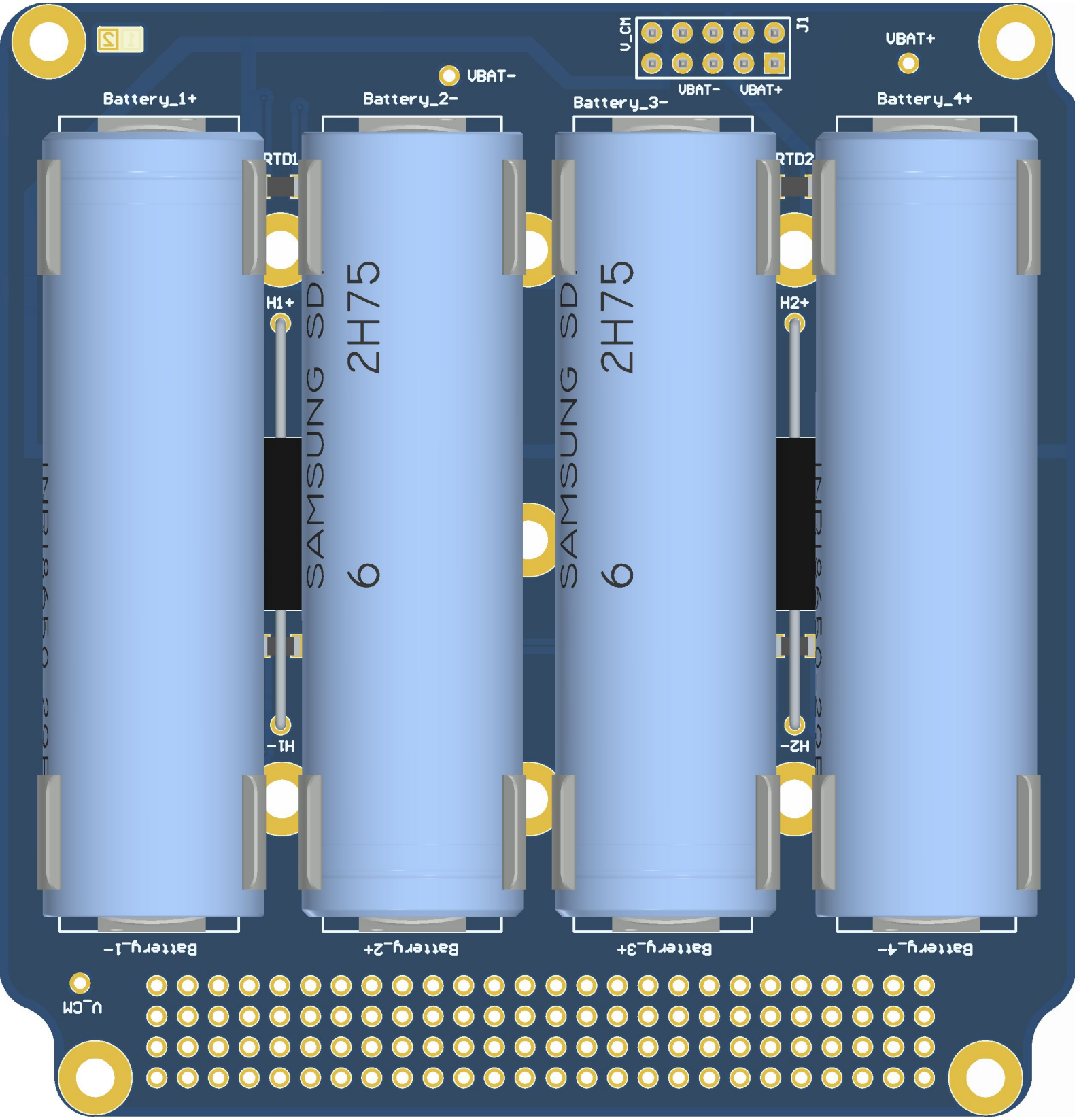
Battery_1-
Battery_2+
Battery_3+
Battery_4-
U_CM
H1-
H1+
RTD1
Battery_1+
SAMSUNG SD
2H75
6
Battery_2-
VBAT-
SAMSUNG SD
2H75
6
Battery_3-
H2-
H2+
RTD2
Battery_4+
VBAT+
U_CM
J1
VBAT-
VBAT+

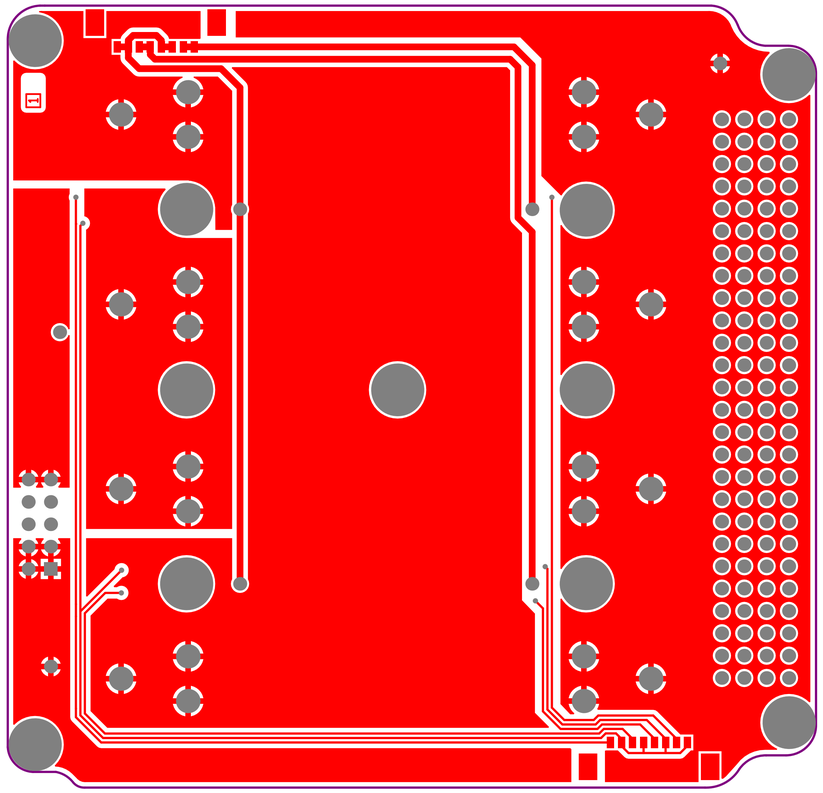

Layer	Name	Material	Thickness	Constant	Board Layer Stack
1	Top Overlay				
2	Top Solder	Solder Resist	0.39mil	3.5	
3	Top Layer	Copper	1.38mil		
4	Dielectric Core	FR-4	59.06mil	4.2	
5	Bottom Layer	Copper	1.38mil		
6	Bottom Solder	Solder Resist	0.39mil	3.5	
7	Bottom Overlay				

Fabrication specifications:

- Copper base 1OZ:
- PCB Material: Prepeg FR4–Standard
- PCB Tickness: 1.6mm
- PCB Surface: HASL (with lead)
- Silkscreen Color: White (top and bottom)
- Soldermask Color: Green
- Vias: Force Complete Tenting
- Special: Stack–up (herein included)

Assembly specifications:

- Solder composition: Include lead
- Fiducials: 3 top and 3 bottom avaliable
- Check BOM for not placed components

SpaceLab - Federal University of Santa Catarina		
Project: Battery Board 4 cells		
Layer: Top Layer		
Designed by: Amanda B. Medeiros (based on FSat-I Bat)		Project Code: BAT4C
Date: 1/22/2021	Version: v0.1	Size: A4

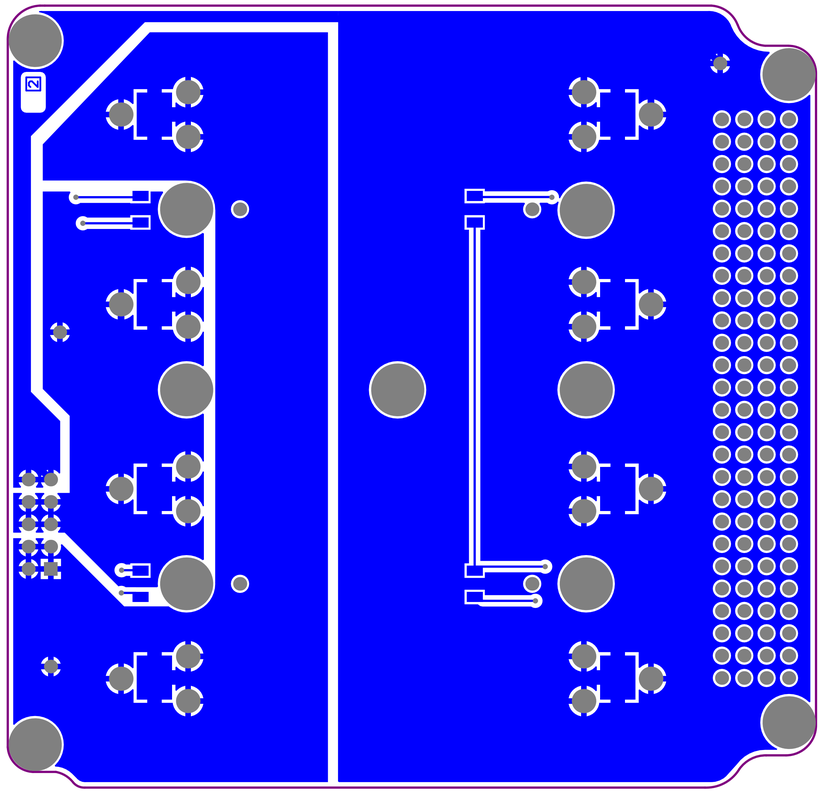

Layer	Name	Material	Thickness	Constant	Board Layer Stack
1	Top Overlay				
2	Top Solder	Solder Resist	0.39mil	3.5	
3	Top Layer	Copper	1.38mil		
4	Dielectric Core	FR-4	59.06mil	4.2	
5	Bottom Layer	Copper	1.38mil		
6	Bottom Solder	Solder Resist	0.39mil	3.5	
7	Bottom Overlay				

Fabrication specifications:

- Copper base 1OZ:
- PCB Material: Prepeg FR4–Standard
- PCB Tickness: 1.6mm
- PCB Surface: HASL (with lead)
- Silkscreen Color: White (top and bottom)
- Soldermask Color: Green
- Vias: Force Complete Tenting
- Special: Stack–up (herein included)

Assembly specifications:

- Solder composition: Include lead
- Fiducials: 3 top and 3 bottom avaliable
- Check BOM for not placed components

SpaceLab - Federal University of Santa Catarina		
Project: Battery Board 4 cells		
Layer: Bottom Layer		
Designed by: Amanda B. Medeiros (based on FSat-I Bat)		Project Code: BAT4C
Date: 1/22/2021	Version: v0.1	Size: A4

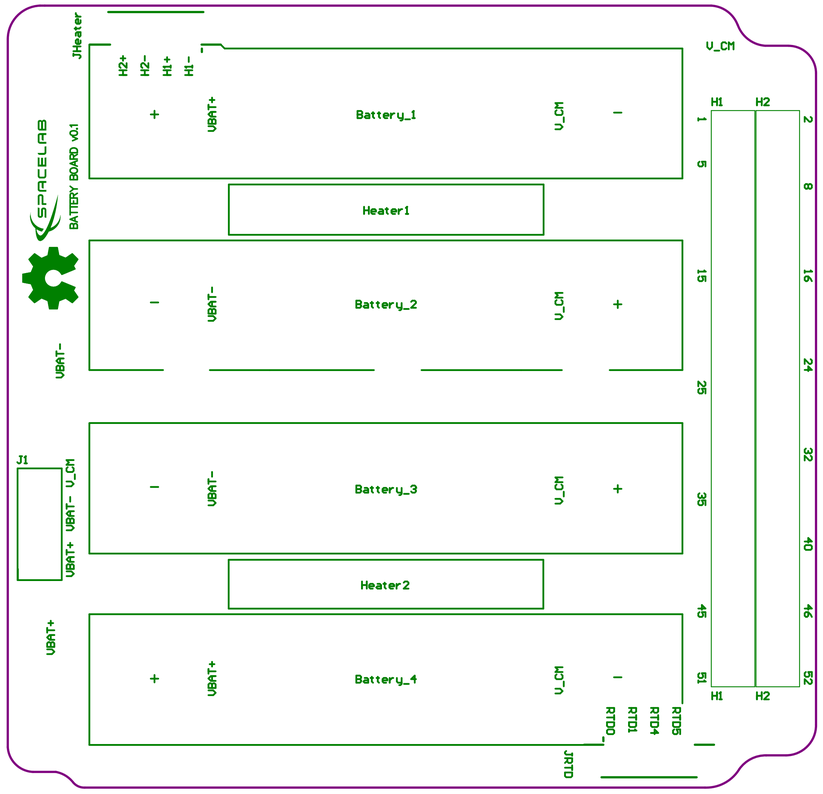

Layer	Name	Material	Thickness	Constant	Board Layer Stack
1	Top Overlay				
2	Top Solder	Solder Resist	0.39mil	3.5	
3	Top Layer	Copper	1.38mil		
4	Dielectric Core	FR-4	59.06mil	4.2	
5	Bottom Layer	Copper	1.38mil		
6	Bottom Solder	Solder Resist	0.39mil	3.5	
7	Bottom Overlay				

Fabrication specifications:

- Copper base 1OZ:
- PCB Material: Prepeg FR4-Standard
- PCB Tickness: 1.6mm
- PCB Surface: HASL (with lead)
- Silkscreen Color: White (top and bottom)
- Soldermask Color: Green
- Vias: Force Complete Tenting
- Special: Stack-up (herein included)

Assembly specifications:

- Solder composition: Include lead
- Fiducials: 3 top and 3 bottom avaliable
- Check BOM for not placed components

SpaceLab - Federal University of Santa Catarina		
Project: Battery Board 4 cells		
Layer: Top Overlay		
Designed by: Amanda B. Medeiros (based on FSat-I Bat)		Project Code: BAT4C
Date: 1/22/2021	Version: v0.1	Size: A4

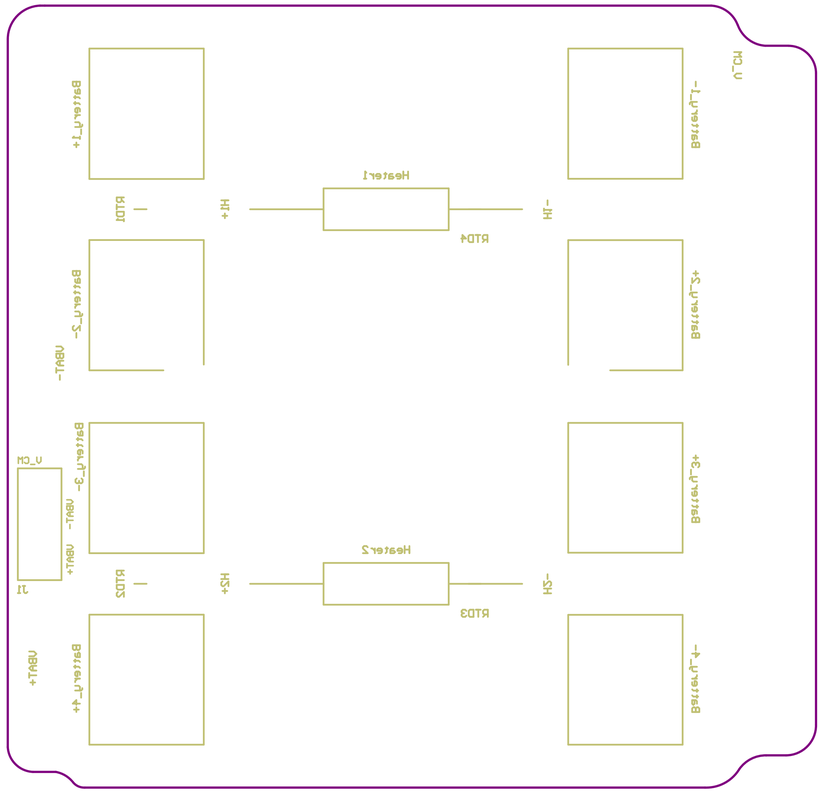

Layer	Name	Material	Thickness	Constant	Board Layer Stack
1	Top Overlay				
2	Top Solder	Solder Resist	0.39mil	3.5	
3	Top Layer	Copper	1.38mil		
4	Dielectric Core	FR-4	59.06mil	4.2	
5	Bottom Layer	Copper	1.38mil		
6	Bottom Solder	Solder Resist	0.39mil	3.5	
7	Bottom Overlay				

Fabrication specifications:

- Copper base 1OZ:
- PCB Material: Prepeg FR4-Standard
- PCB Tickness: 1.6mm
- PCB Surface: HASL (with lead)
- Silkscreen Color: White (top and bottom)
- Soldermask Color: Green
- Vias: Force Complete Tenting
- Special: Stack-up (herein included)

Assembly specifications:

- Solder composition: Include lead
- Fiducials: 3 top and 3 bottom avaliable
- Check BOM for not placed components

SpaceLab - Federal University of Santa Catarina		SPACE LAB
Project: Battery Board 4 cells		
Layer: Bottom Overlay		
Designed by: Amanda B. Medeiros (based on FSat-I Bat)		Project Code: BAT4C
Date: 1/22/2021	Version: v0.1	Size: A4

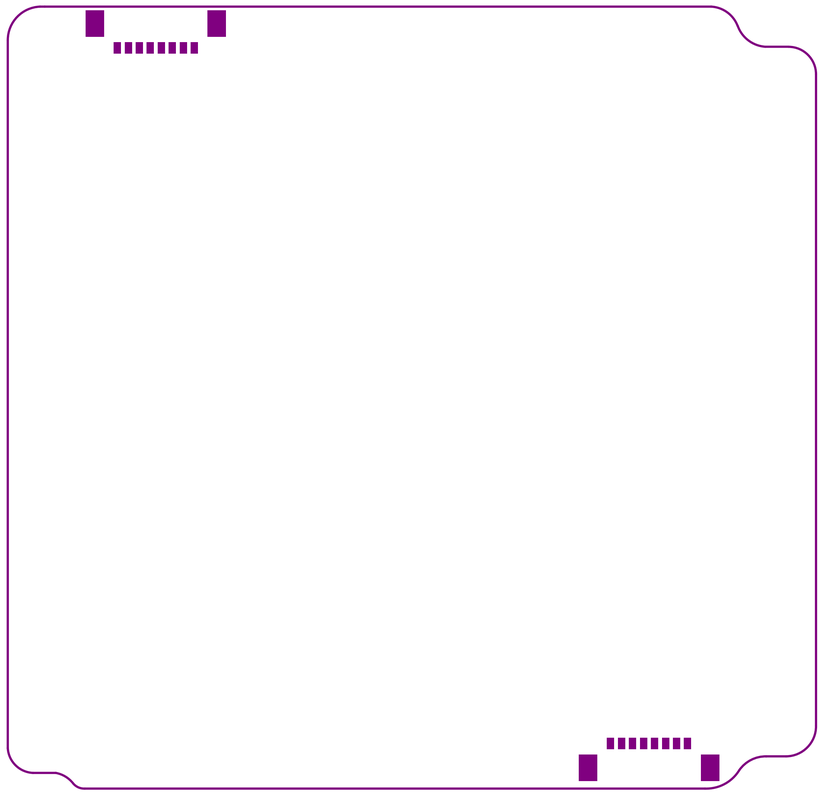

Layer	Name	Material	Thickness	Constant	Board Layer Stack
1	Top Overlay				
2	Top Solder	Solder Resist	0.39mil	3.5	
3	Top Layer	Copper	1.38mil		
4	Dielectric Core	FR-4	59.06mil	4.2	
5	Bottom Layer	Copper	1.38mil		
6	Bottom Solder	Solder Resist	0.39mil	3.5	
7	Bottom Overlay				

Fabrication specifications:

- Copper base 1OZ:
- PCB Material: Prepeg FR4–Standard
- PCB Tickness: 1.6mm
- PCB Surface: HASL (with lead)
- Silkscreen Color: White (top and bottom)
- Soldermask Color: Green
- Vias: Force Complete Tenting
- Special: Stack–up (herein included)

Assembly specifications:

- Solder composition: Include lead
- Fiducials: 3 top and 3 bottom avaliable
- Check BOM for not placed components

SpaceLab - Federal University of Santa Catarina		SPACE LAB
Project: Battery Board 4 cells		
Layer: Top Paste		
Designed by: Amanda B. Medeiros (based on FSat-I Bat)		Project Code: BAT4C
Date: 1/22/2021	Version: v0.1	Size: A4

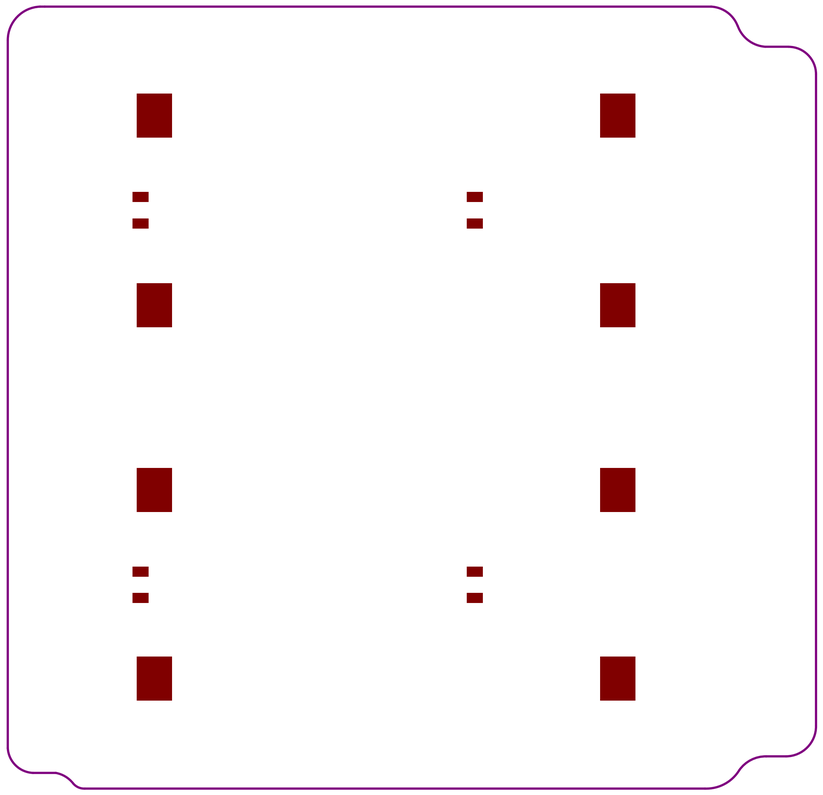

Layer	Name	Material	Thickness	Constant	Board Layer Stack
1	Top Overlay				
2	Top Solder	Solder Resist	0.39mil	3.5	
3	Top Layer	Copper	1.38mil		
4	Dielectric Core	FR-4	59.06mil	4.2	
5	Bottom Layer	Copper	1.38mil		
6	Bottom Solder	Solder Resist	0.39mil	3.5	
7	Bottom Overlay				

Fabrication specifications:

- Copper base 1OZ:
- PCB Material: Prepeg FR4–Standard
- PCB Tickness: 1.6mm
- PCB Surface: HASL (with lead)
- Silkscreen Color: White (top and bottom)
- Soldermask Color: Green
- Vias: Force Complete Tenting
- Special: Stack–up (herein included)

Assembly specifications:

- Solder composition: Include lead
- Fiducials: 3 top and 3 bottom avaliable
- Check BOM for not placed components

SpaceLab - Federal University of Santa Catarina		
Project: Battery Board 4 cells		
Layer: Bottom Paste		
Designed by: Amanda B. Medeiros (based on FSat-I Bat)		Project Code: BAT4C
Date: 1/22/2021	Version: v0.1	Size: A4

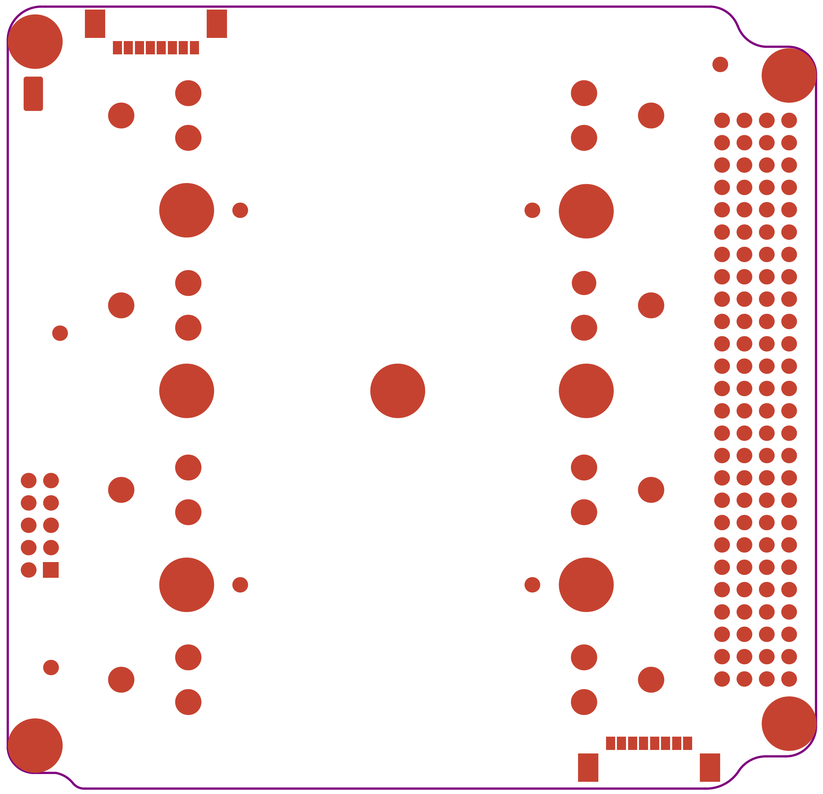

Layer	Name	Material	Thickness	Constant	Board Layer Stack
1	Top Overlay				
2	Top Solder	Solder Resist	0.39mil	3.5	
3	Top Layer	Copper	1.38mil		
4	Dielectric Core	FR-4	59.06mil	4.2	
5	Bottom Layer	Copper	1.38mil		
6	Bottom Solder	Solder Resist	0.39mil	3.5	
7	Bottom Overlay				

Fabrication specifications:

- Copper base 1OZ:
- PCB Material: Prepeg FR4–Standard
- PCB Tickness: 1.6mm
- PCB Surface: HASL (with lead)
- Silkscreen Color: White (top and bottom)
- Soldermask Color: Green
- Vias: Force Complete Tenting
- Special: Stack–up (herein included)

Assembly specifications:

- Solder composition: Include lead
- Fiducials: 3 top and 3 bottom avaliable
- Check BOM for not placed components

SpaceLab - Federal University of Santa Catarina		SPACE LAB
Project: Battery Board 4 cells		
Layer: Top Solder		
Designed by: Amanda B. Medeiros (based on FSat-I Bat)		Project Code: BAT4C
Date: 1/22/2021	Version: v0.1	Size: A4

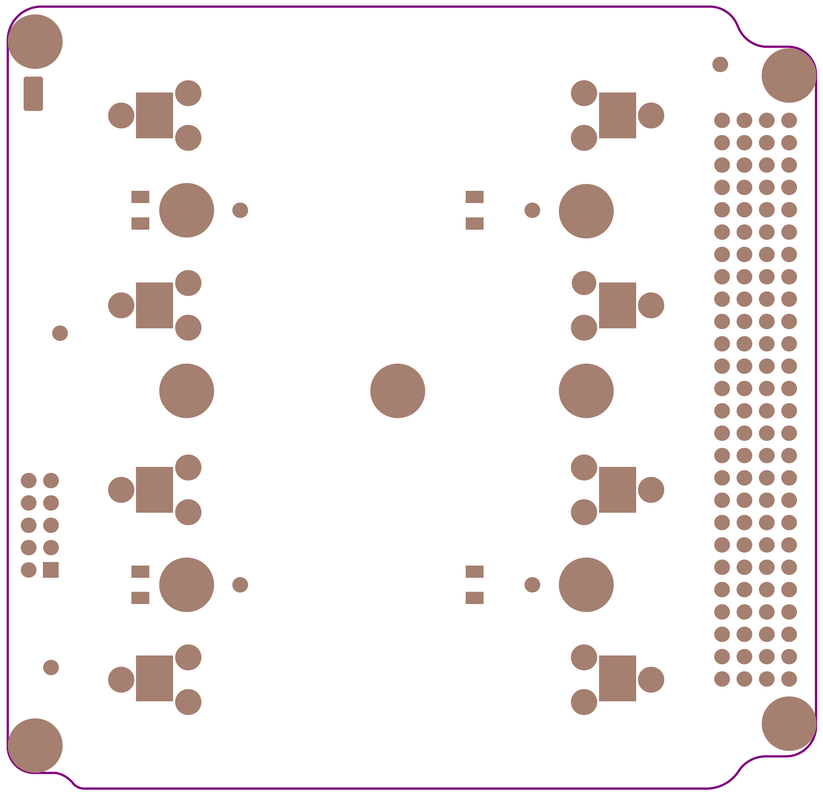

Layer	Name	Material	Thickness	Constant	Board Layer Stack
1	Top Overlay				
2	Top Solder	Solder Resist	0.39mil	3.5	
3	Top Layer	Copper	1.38mil		
4	Dielectric Core	FR-4	59.06mil	4.2	
5	Bottom Layer	Copper	1.38mil		
6	Bottom Solder	Solder Resist	0.39mil	3.5	
7	Bottom Overlay				

Fabrication specifications:

- Copper base 1OZ:
- PCB Material: Prepeg FR4–Standard
- PCB Tickness: 1.6mm
- PCB Surface: HASL (with lead)
- Silkscreen Color: White (top and bottom)
- Soldermask Color: Green
- Vias: Force Complete Tenting
- Special: Stack–up (herein included)

Assembly specifications:

- Solder composition: Include lead
- Fiducials: 3 top and 3 bottom avaliable
- Check BOM for not placed components

SpaceLab - Federal University of Santa Catarina		
Project: Battery Board 4 cells		
Layer: Bottom Solder		
Designed by: Amanda B. Medeiros (based on FSat-I Bat)		Project Code: BAT4C
Date: 1/22/2021	Version: v0.1	Size: A4

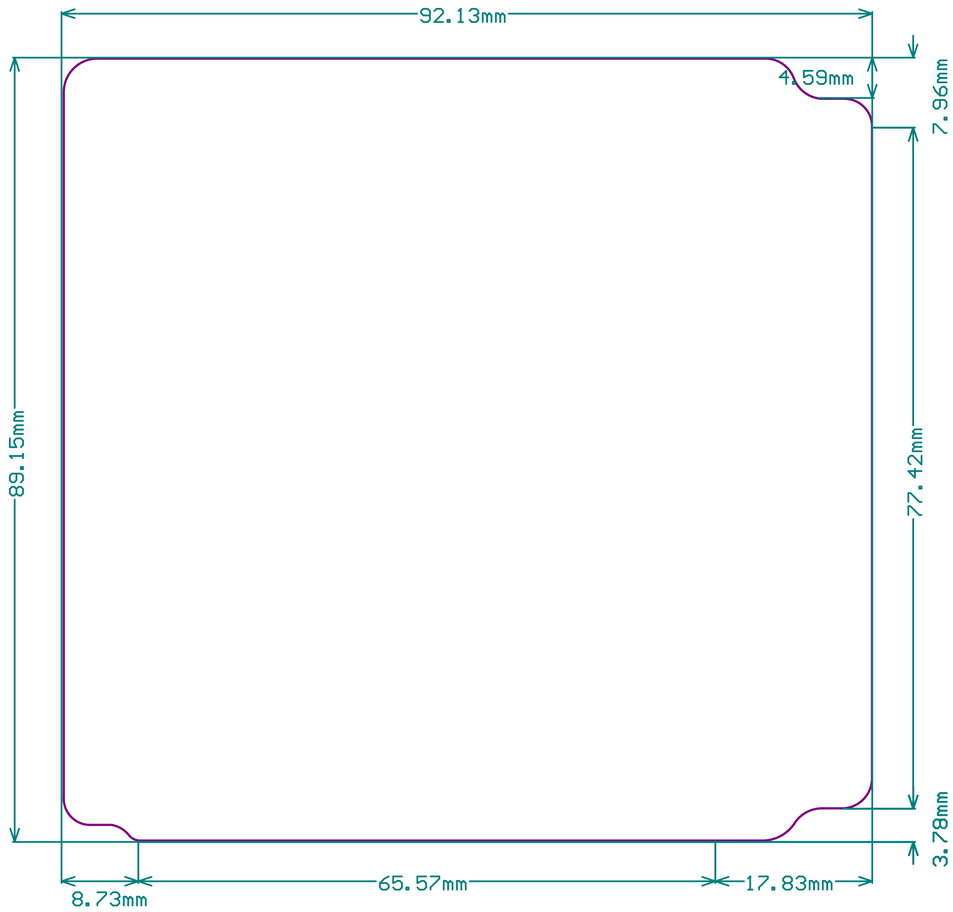

Layer	Name	Material	Thickness	Constant	Board Layer Stack
1	Top Overlay				
2	Top Solder	Solder Resist	0.39mil	3.5	
3	Top Layer	Copper	1.38mil		
4	Dielectric Core	FR-4	59.06mil	4.2	
5	Bottom Layer	Copper	1.38mil		
6	Bottom Solder	Solder Resist	0.39mil	3.5	
7	Bottom Overlay				

Fabrication specifications:

- Copper base 1OZ:
- PCB Material: Prepeg FR4–Standard
- PCB Tickness: 1.6mm
- PCB Surface: HASL (with lead)
- Silkscreen Color: White (top and bottom)
- Soldermask Color: Green
- Vias: Force Complete Tenting
- Special: Stack–up (herein included)

Assembly specifications:

- Solder composition: Include lead
- Fiducials: 3 top and 3 bottom avaliable
- Check BOM for not placed components

SpaceLab - Federal University of Santa Catarina		SPACE LAB
Project: Battery Board 4 cells		
Layer: Dimension		
Designed by: Amanda B. Medeiros (based on FSat-I Bat)		Project Code: BAT4C
Date: 1/22/2021	Version: v0.1	Size: A4

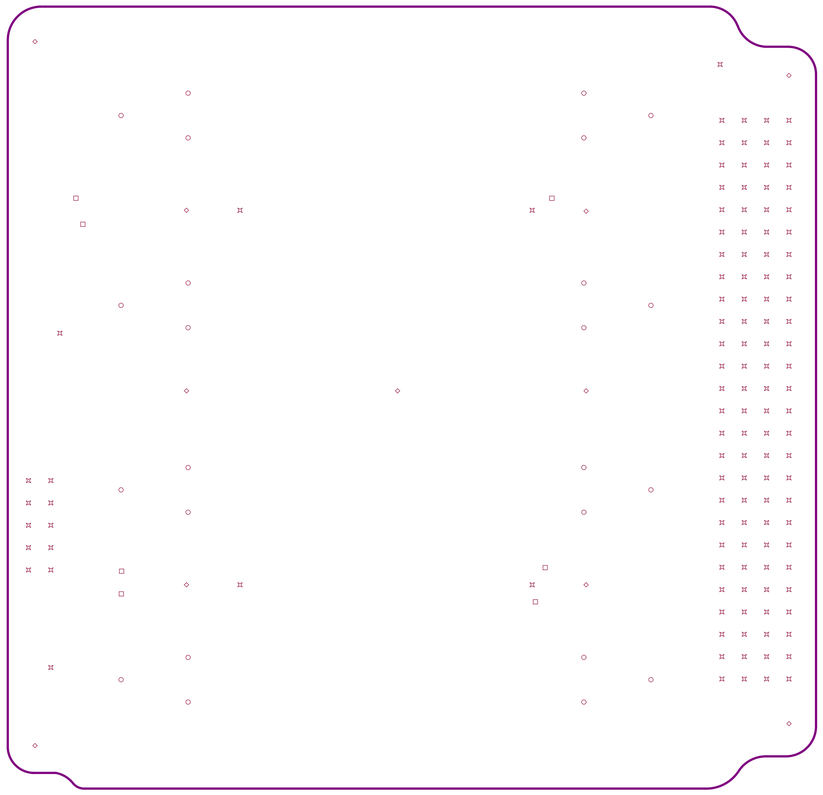

Layer	Name	Material	Thickness	Constant	Board Layer Stack
1	Top Overlay				
2	Top Solder	Solder Resist	0.39mil	3.5	
3	Top Layer	Copper	1.38mil		
4	Dielectric Core	FR-4	59.06mil	4.2	
5	Bottom Layer	Copper	1.38mil		
6	Bottom Solder	Solder Resist	0.39mil	3.5	
7	Bottom Overlay				

Symbol	Count	Hole Size	Plated	Hole Type	Drill Layer Pair	Via/Pad
□	7	11.81mil (0.300mm)	PTH	Round	Top Layer - Bottom Layer	Via
◇	11	125.98mil (3.200mm)	PTH	Round	Top Layer - Bottom Layer	Pad
○	24	72.05mil (1.830mm)	PTH	Round	Top Layer - Bottom Layer	Pad
⌘	121	39.37mil (1.000mm)	PTH	Round	Top Layer - Bottom Layer	Pad
	163 Total					

Fabrication specifications:

- Copper base 1OZ:
- PCB Material: Prepeg FR4–Standard
- PCB Tickness: 1.6mm
- PCB Surface: HASL (with lead)
- Silkscreen Color: White (top and bottom)
- Soldermask Color: Green
- Vias: Force Complete Tenting
- Special: Stack–up (herein included)

Assembly specifications:

- Solder composition: Include lead
- Fiducials: 3 top and 3 bottom avaliable
- Check BOM for not placed components

SpaceLab - Federal University of Santa Catarina		SPACE LAB
Project: Battery Board 4 cells		
Layer: Drill Drawing		
Designed by: Amanda B. Medeiros (based on FSat-I Bat)		Project Code: BAT4C
Date: 1/22/2021	Version: v0.1	Size: A4

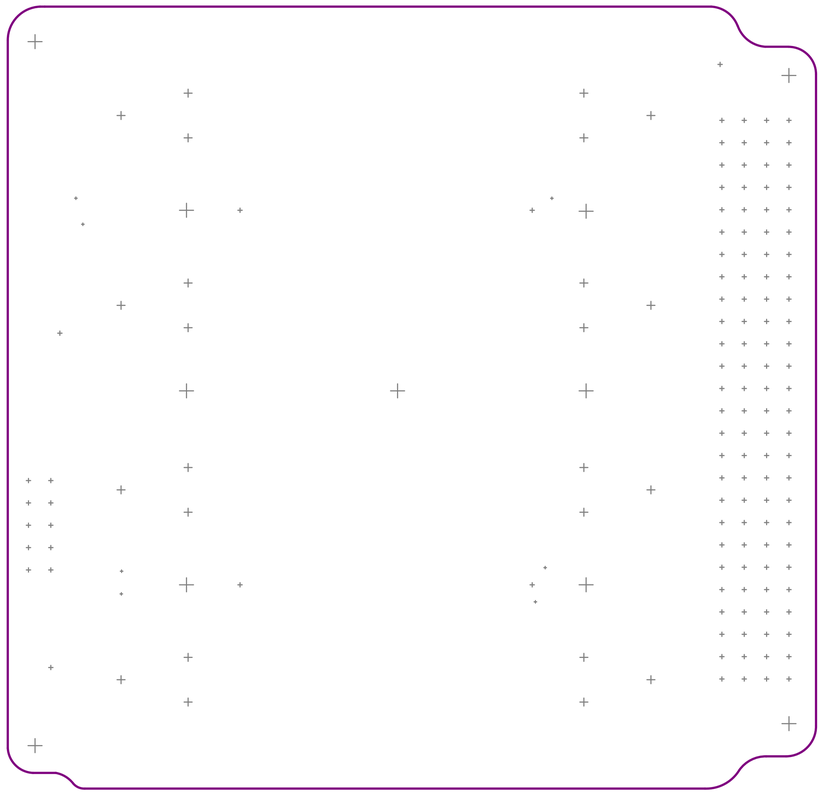

Layer	Name	Material	Thickness	Constant	Board Layer Stack
1	Top Overlay				
2	Top Solder	Solder Resist	0.39mil	3.5	
3	Top Layer	Copper	1.38mil		
4	Dielectric Core	FR-4	59.06mil	4.2	
5	Bottom Layer	Copper	1.38mil		
6	Bottom Solder	Solder Resist	0.39mil	3.5	
7	Bottom Overlay				

Fabrication specifications:

- Copper base 1OZ:
- PCB Material: Prepeg FR4–Standard
- PCB Tickness: 1.6mm
- PCB Surface: HASL (with lead)
- Silkscreen Color: White (top and bottom)
- Soldermask Color: Green
- Vias: Force Complete Tenting
- Special: Stack–up (herein included)

Assembly specifications:

- Solder composition: Include lead
- Fiducials: 3 top and 3 bottom avaliable
- Check BOM for not placed components

SpaceLab - Federal University of Santa Catarina		SPACE LAB
Project: Battery Board 4 cells		
Layer: Drill Guide		
Designed by: Amanda B. Medeiros (based on FSat-I Bat)		Project Code: BAT4C
Date: 1/22/2021	Version: v0.1	Size: A4