Rev	Description	Date	Author
0.1	- Initial release - Update beacon radio output - General updates for compliance with the SpaceLab hardware development standards	28-Aug-2020	Andre M. P. Mattos

Revision History

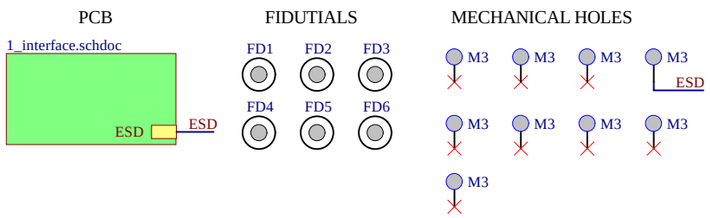

PCB Elements

EPS2 Hardware:

- Drawn by: André M. P. Mattos (updates from FloripaSat-I EPS)
- Based on FloripaSat-I OBDH designed by: Sara V. Martinez
- Reviewers: Kleber Gouveia and Yan C. Azeredo
- Support: Gabriel M. Marcelino

Project Contributions

Copyright © 2019
by Universidade Federal de Santa Catarina.

EPS2 Hardware
Based on the FloripaSat-I EPS

This work is licensed under the Creative Commons Attribution-ShareAlike 4.0 International License. To view a copy of this license, visit http://creativecommons.org/licenses/by-sa/4.0/.

Project Information

EPS 2 power diagram

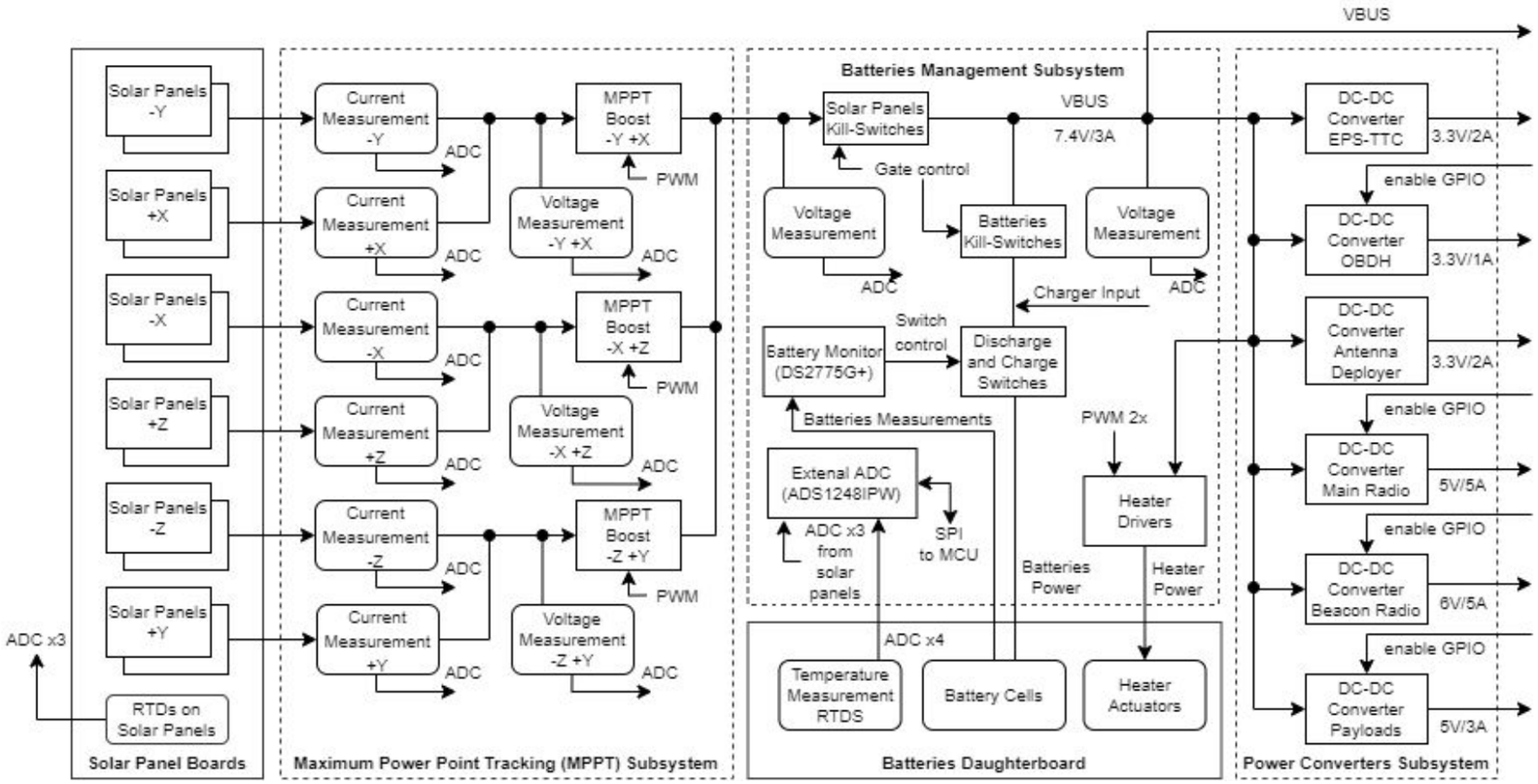

EPS 2 MCU diagram

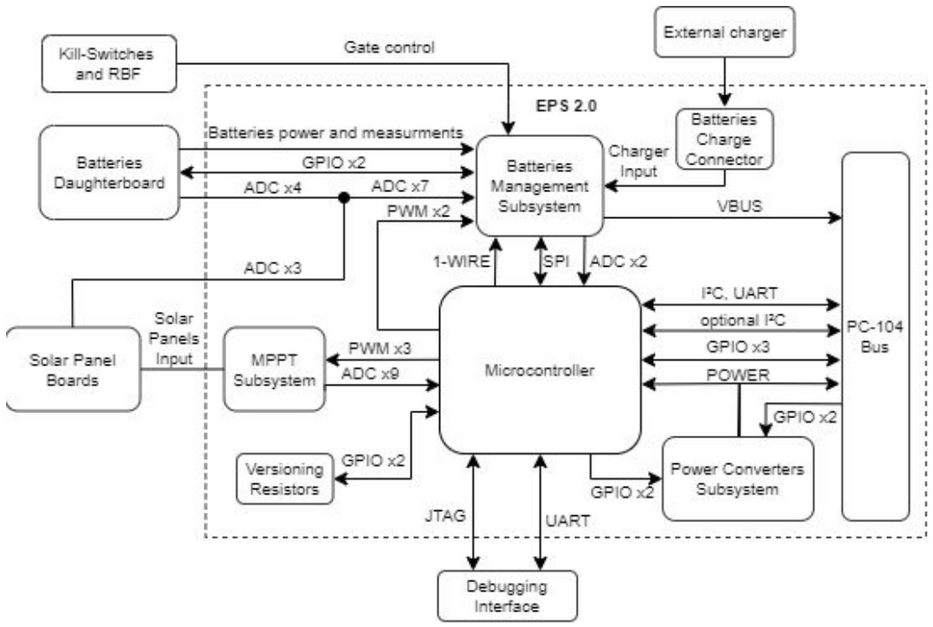

SpaceLab - Federal University of Santa Catarina			
Project: *eps2_project.prjpcb / [No Variations]*			
Title: *Block diagram*			
Designed by: *Andre M. P. Mattos*			
Date: 06/09/2020	Version: *v0.1*	Sheet *1* of *11*	Size: A3

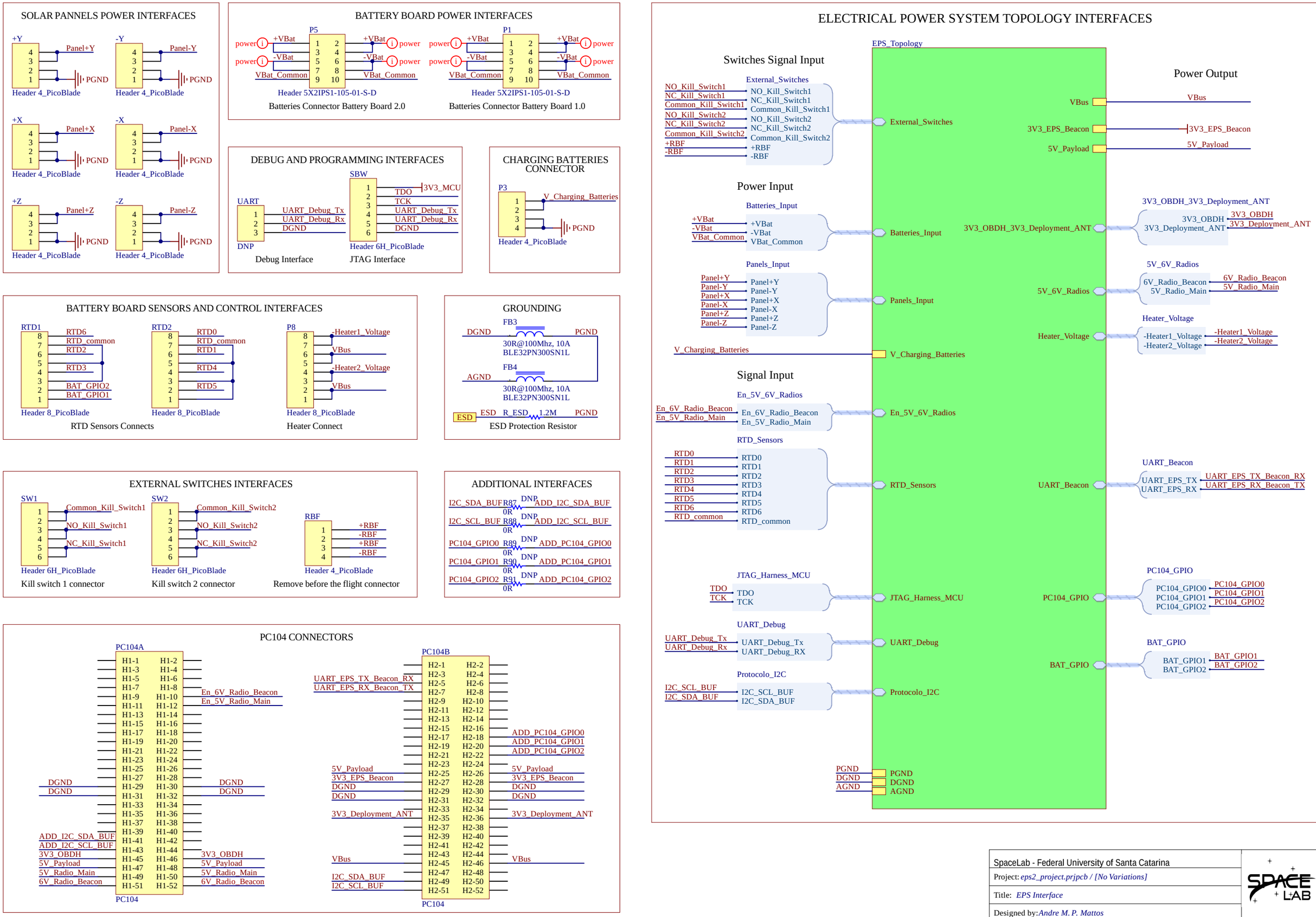

SpaceLab - Federal University of Santa Catarina

Project: *eps2_project.prjpcb / [No Variations]*

Title: *EPS Interface*

Designed by: *Andre M. P. Mattos*

Date: 06/09/2020 | Version: *v0.1* | Sheet *2* of *11* | Size: A3

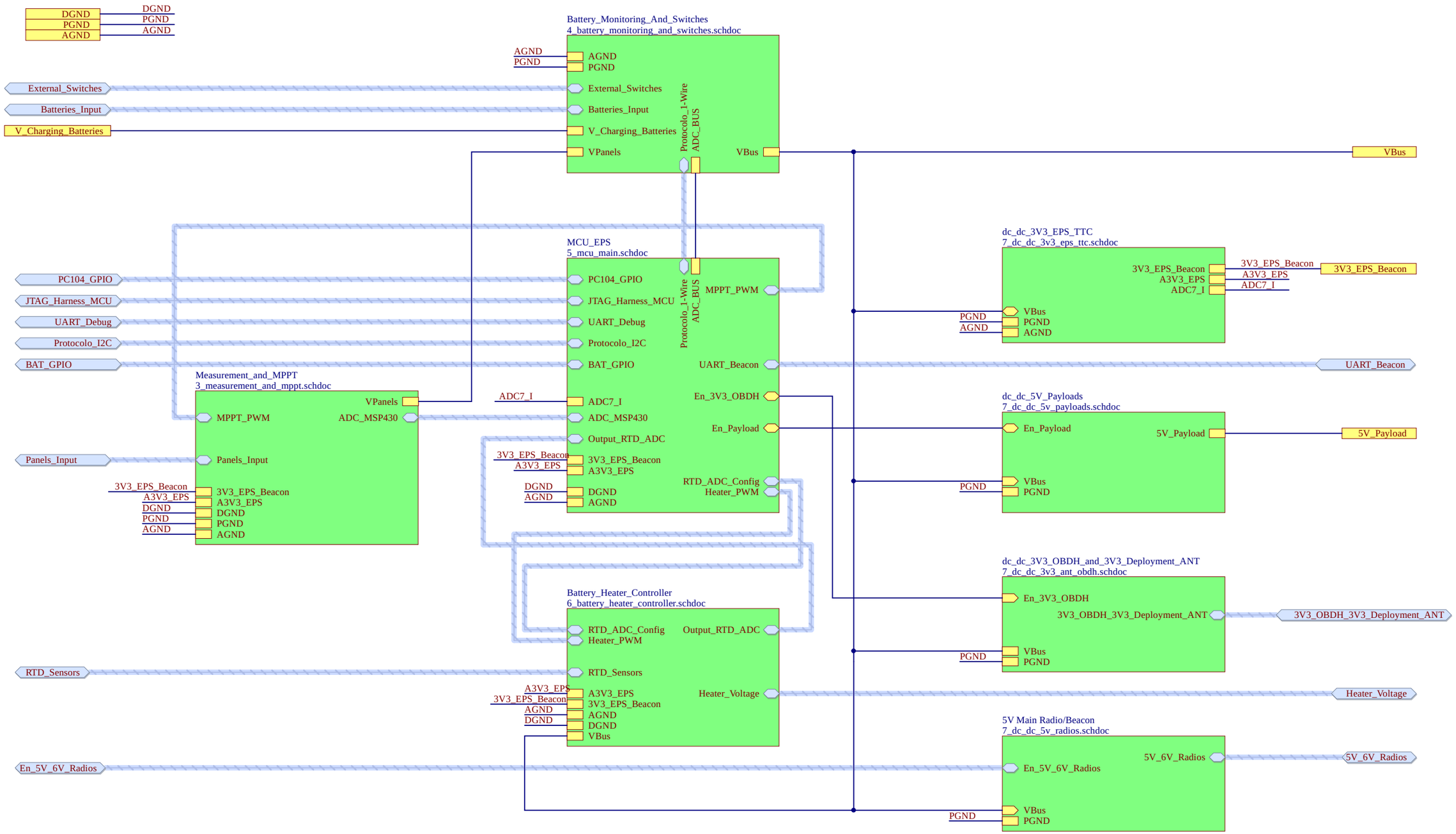

SpaceLab - Federal University of Santa Catarina			
Project: *eps2_project.prjpcb / [No Variations]*			
Title: *EPS Topology*			
Designed by: *Andre M. P. Mattos*			
Date: 06/09/2020	Version: *v0.1*	Sheet *3* of *11*	Size: A3

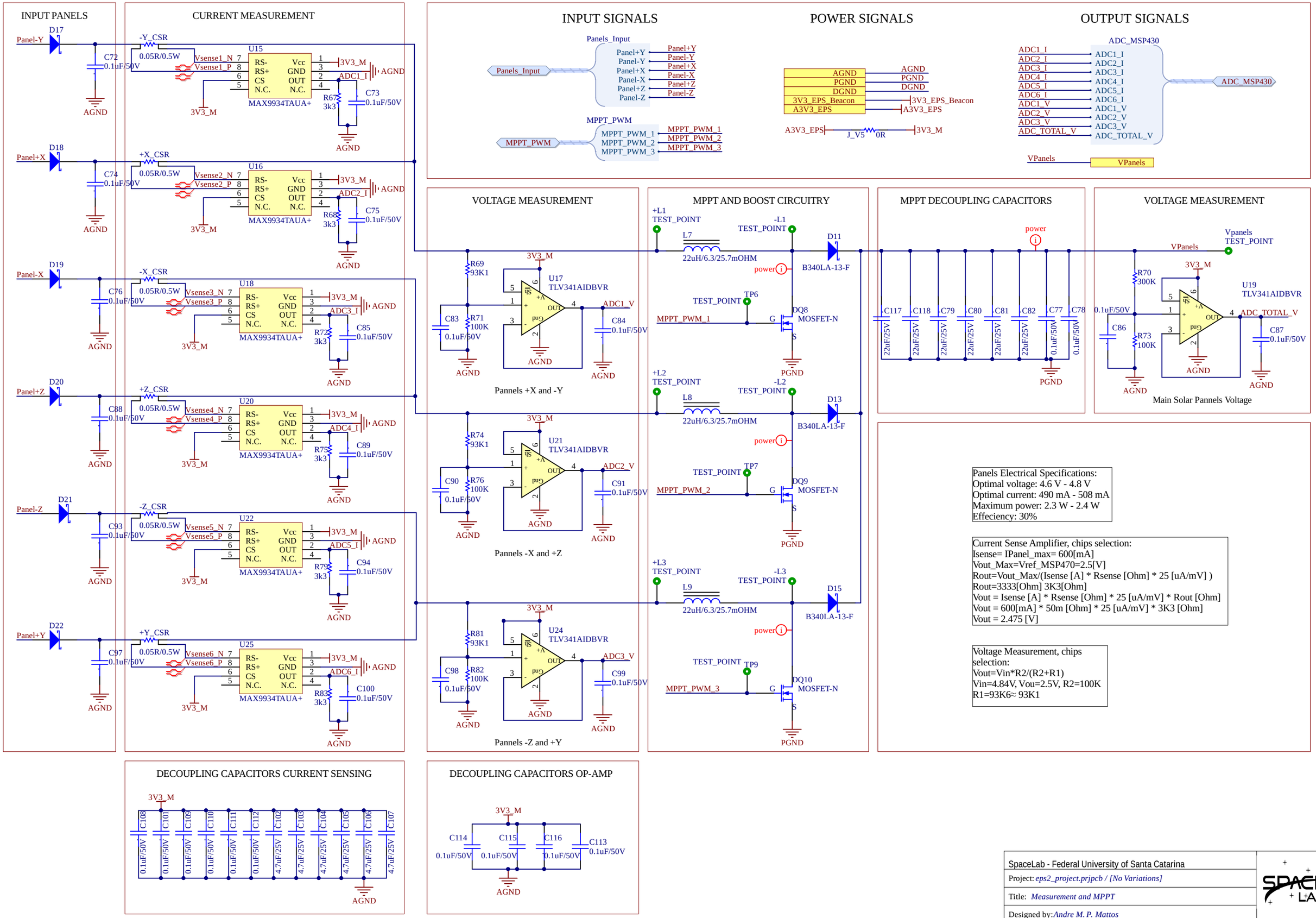

SpaceLab - Federal University of Santa Catarina

Project: *eps2_project.prjpcb / [No Variations]*

Title: *Measurement and MPPT*

Designed by: *Andre M. P. Mattos*

Date: 06/09/2020 | Version: *v0.1* | Sheet *4* of *11* | Size: A3

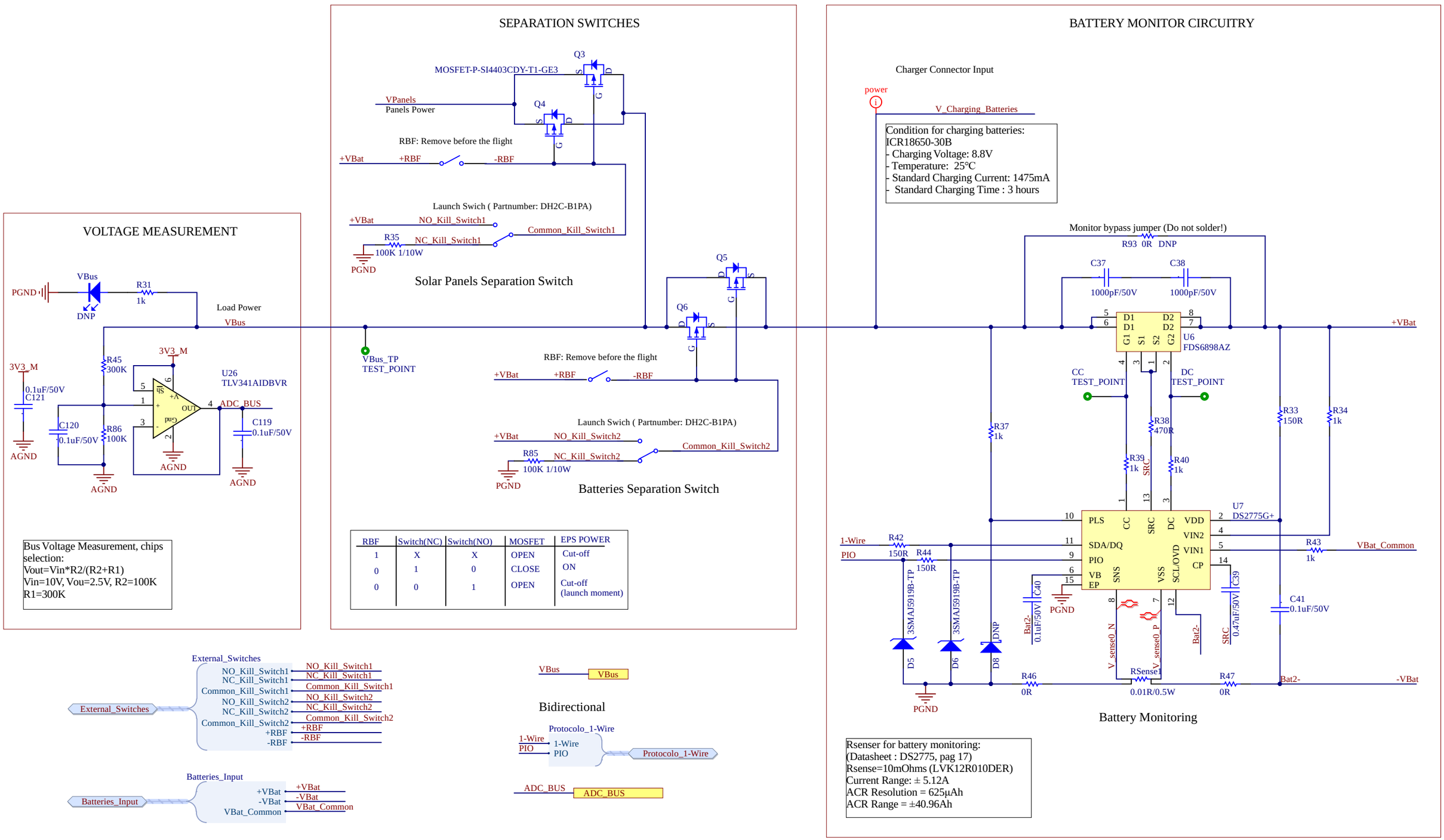

RBF	Switch(NC)	Switch(NO)	MOSFET	EPS POWER
1	X	X	OPEN	Cut-off
0	1	0	CLOSE	ON
0	0	1	OPEN	Cut-off (launch moment)

SpaceLab - Federal University of Santa Catarina

Project: *eps2_project.prjpcb / [No Variations]*

Title: *Batteries Monitor and Power Switches*

Designed by: *Andre M. P. Mattos*

Date: 06/09/2020 | Version: *v0.1* | Sheet *5* of *11* | Size: A3

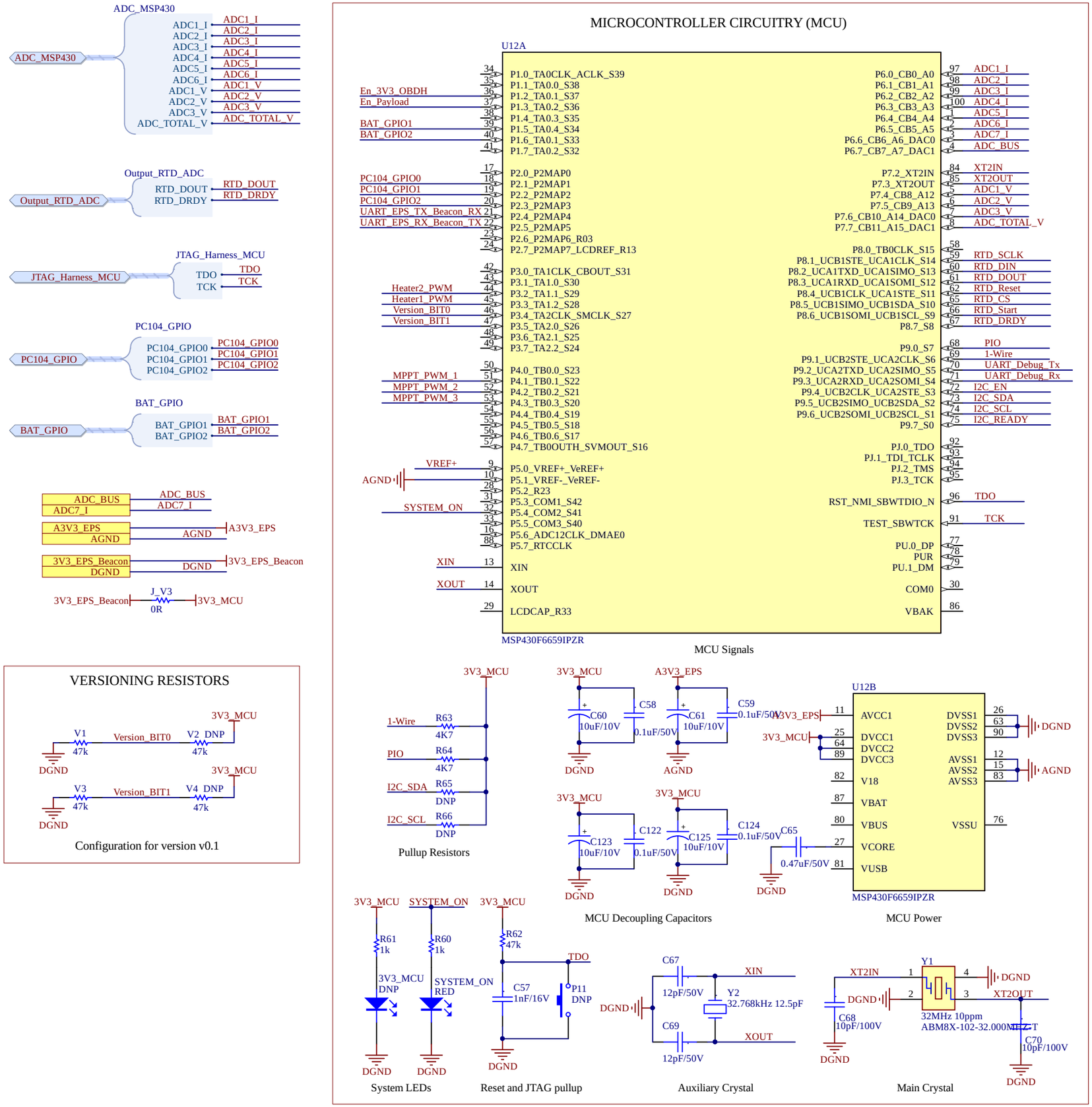

SpaceLab - Federal University of Santa Catarina	
Project: *eps2_project.prjpcb / [No Variations]*	
Title: *EPS MCU Main*	
Designed by: *Andre M. P. Mattos*	
Date: 06/09/2020	Version: *v0.1* · Sheet *6* of *11* · Size: A3

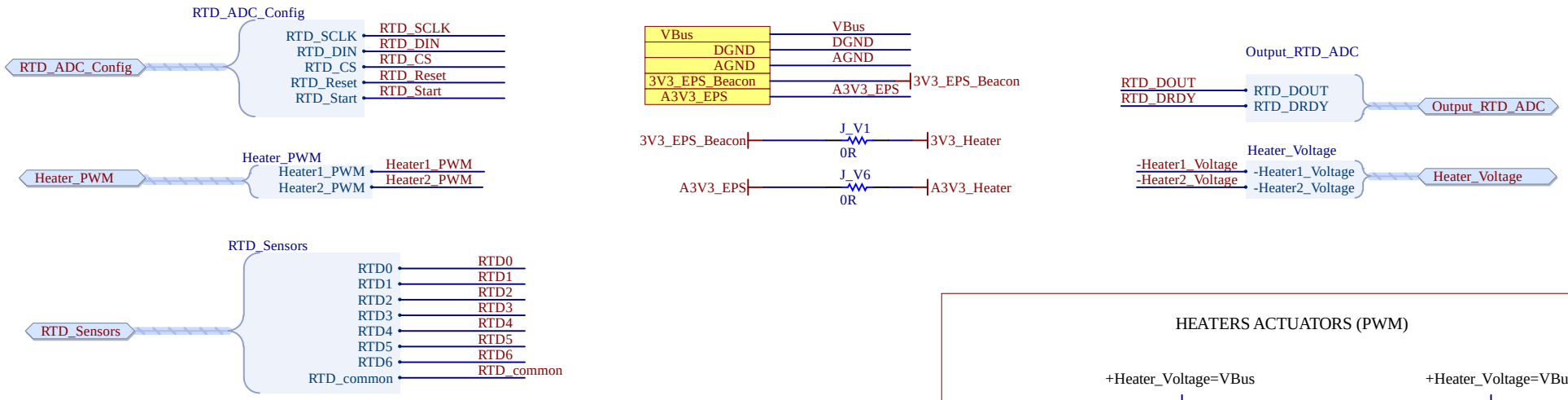

HEATERS SENSORS (RTD)

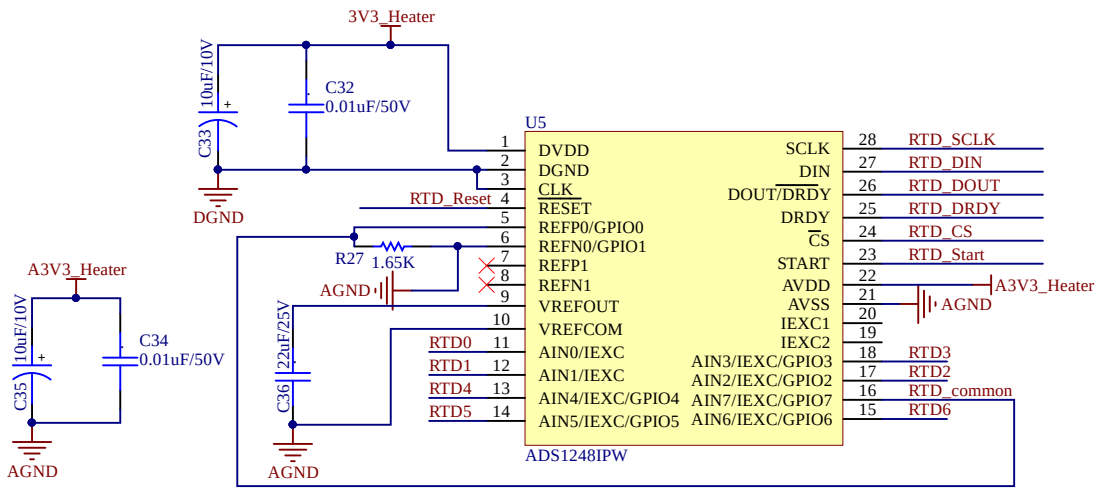

Decoupling capacitors

Analog-to-Digital Converter (for temperature acquisition through external thermocouples)

HEATERS ACTUATORS (PWM)

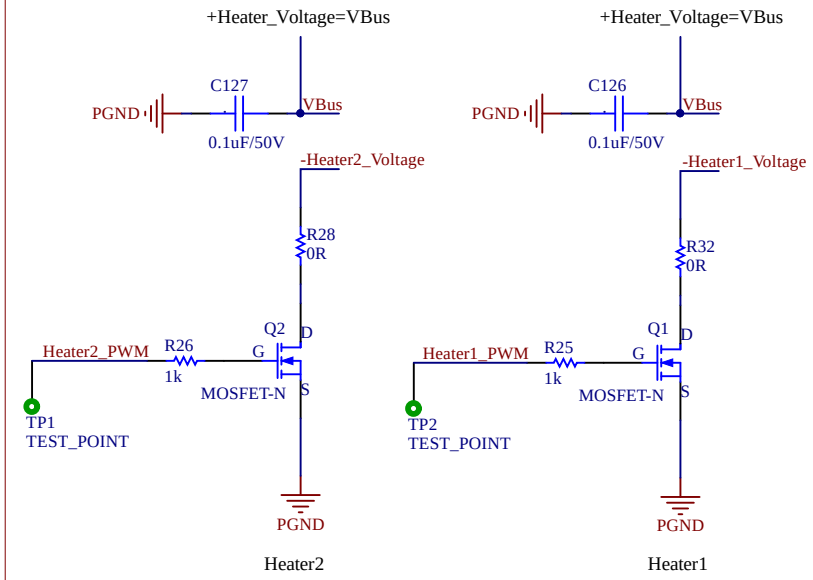

SpaceLab - Federal University of Santa Catarina			
Project: *eps2_project.prjpcb / [No Variations]*			
Title: *Batteries Heater Controller*			
Designed by: *Andre M. P. Mattos*			
Date: 06/09/2020	Version: *v0.1*	Sheet *7* of *11*	Size: A4

OBDH STEP-DOWN CONVERTER 3V3/1A

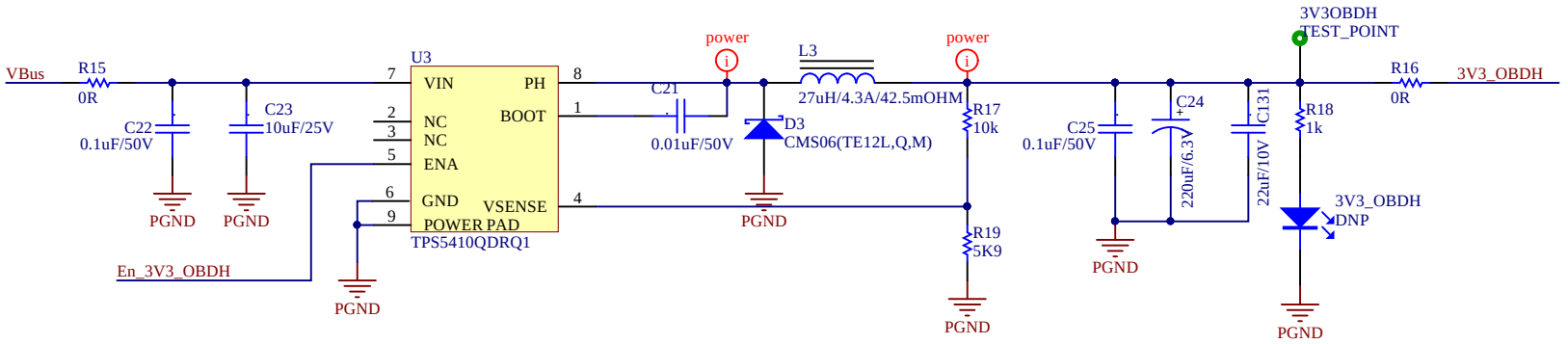

OBDH Digital dc/dc converter 3V3/1A.
Enable from EPS.
Configuration:
VinMin = 6.5V
VinMax = 15.0V
Vout = 3.3V
Iout = 1A
Pd = 0.58W

ANTENNA DEPLOYER STEP-DOWN CONVERTER 3V3/2A

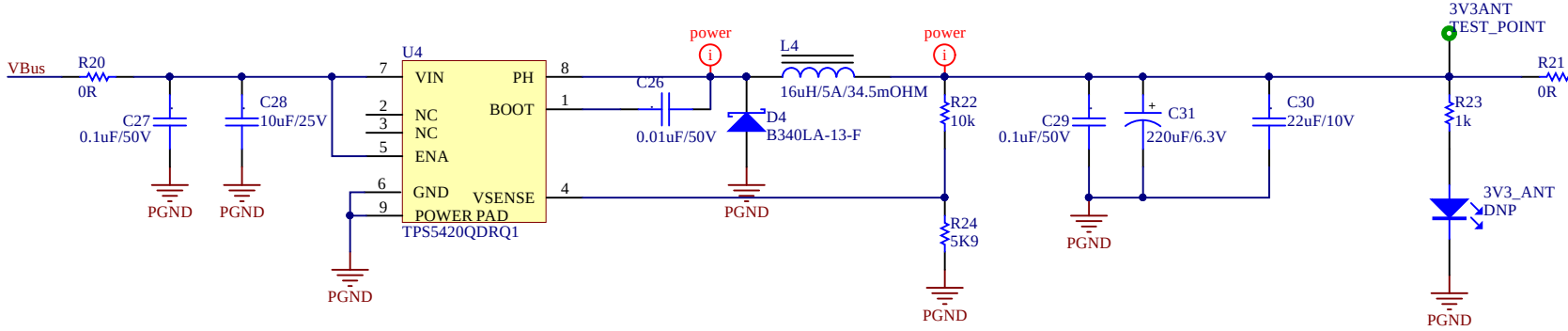

Deployment Antenna Step-Down Converter 3V3/2A.
Configuration:
VinMin =5.5V
VinMax = 15.0V
Vout =3.3V
Iout = 2A
Total Pd =1.08W

Input

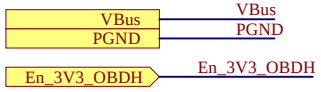

Output

SpaceLab - Federal University of Santa Catarina			
Project: *eps2_project.prjpcb / [No Variations]*			
Title: *OBDH Step-Down 3V3/1A/2A*			
Designed by: *Andre M. P. Mattos*			
Date: 06/09/2020	Version: *v0.1*	Sheet *8* of *11*	Size: A4

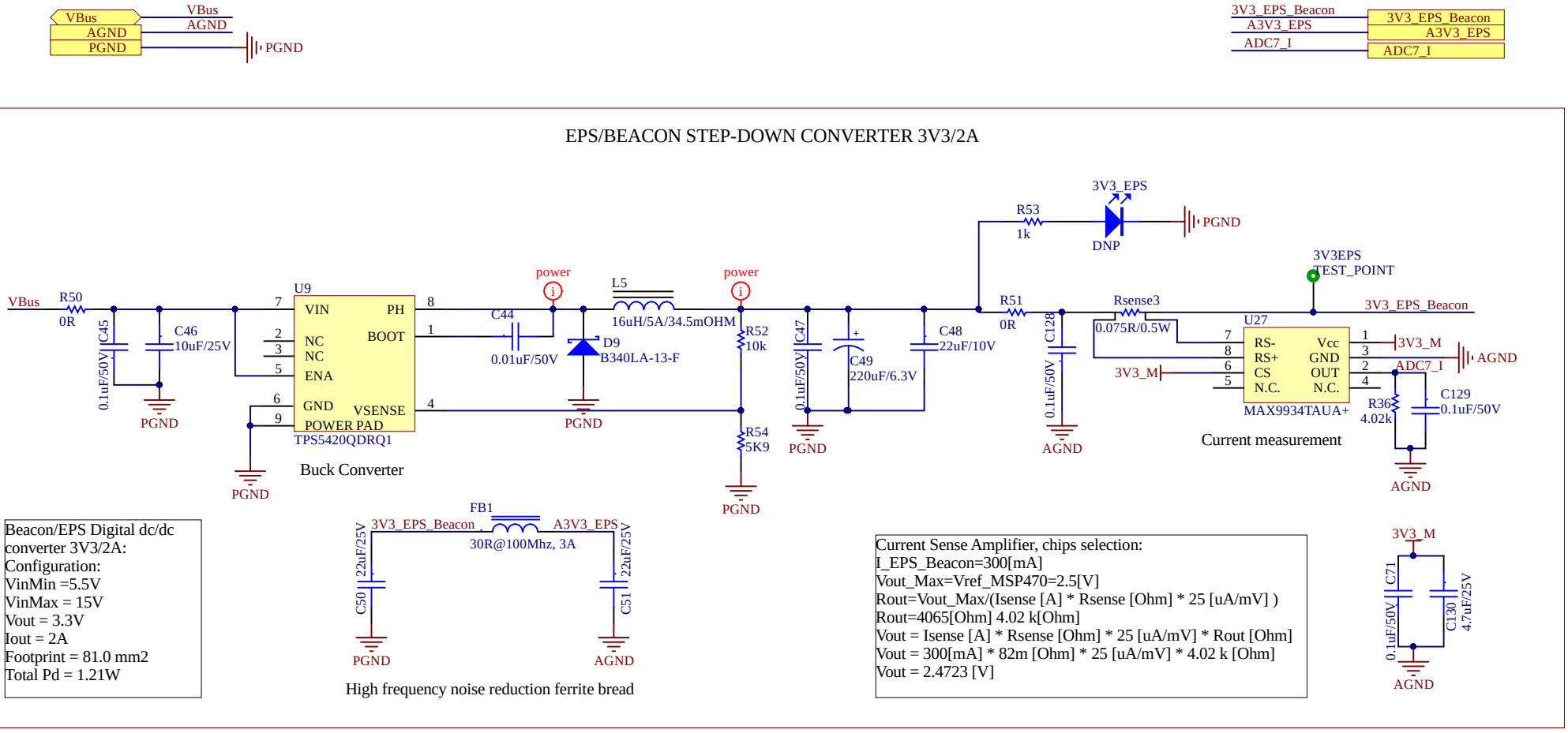

Beacon/EPS Digital dc/dc converter 3V3/2A:
Configuration:
VinMin =5.5V
VinMax = 15V
Vout = 3.3V
Iout = 2A
Footprint = 81.0 mm2
Total Pd = 1.21W

Current Sense Amplifier, chips selection:
I_EPS_Beacon=300[mA]
Vout_Max=Vref_MSP470=2.5[V]
Rout=Vout_Max/(Isense [A] * Rsense [Ohm] * 25 [uA/mV])
Rout=4065[Ohm] 4.02 k[Ohm]
Vout = Isense [A] * Rsense [Ohm] * 25 [uA/mV] * Rout [Ohm]
Vout = 300[mA] * 82m [Ohm] * 25 [uA/mV] * 4.02 k [Ohm]
Vout = 2.4723 [V]

SpaceLab - Federal University of Santa Catarina			
Project: *eps2_project.prjpcb / [No Variations]*			
Title: *EPS/BCM Step-Down Converter*			
Designed by: *Andre M. P. Mattos*			
Date: 06/09/2020	Version: *v0.1*	Sheet *9* of *11*	Size: A4

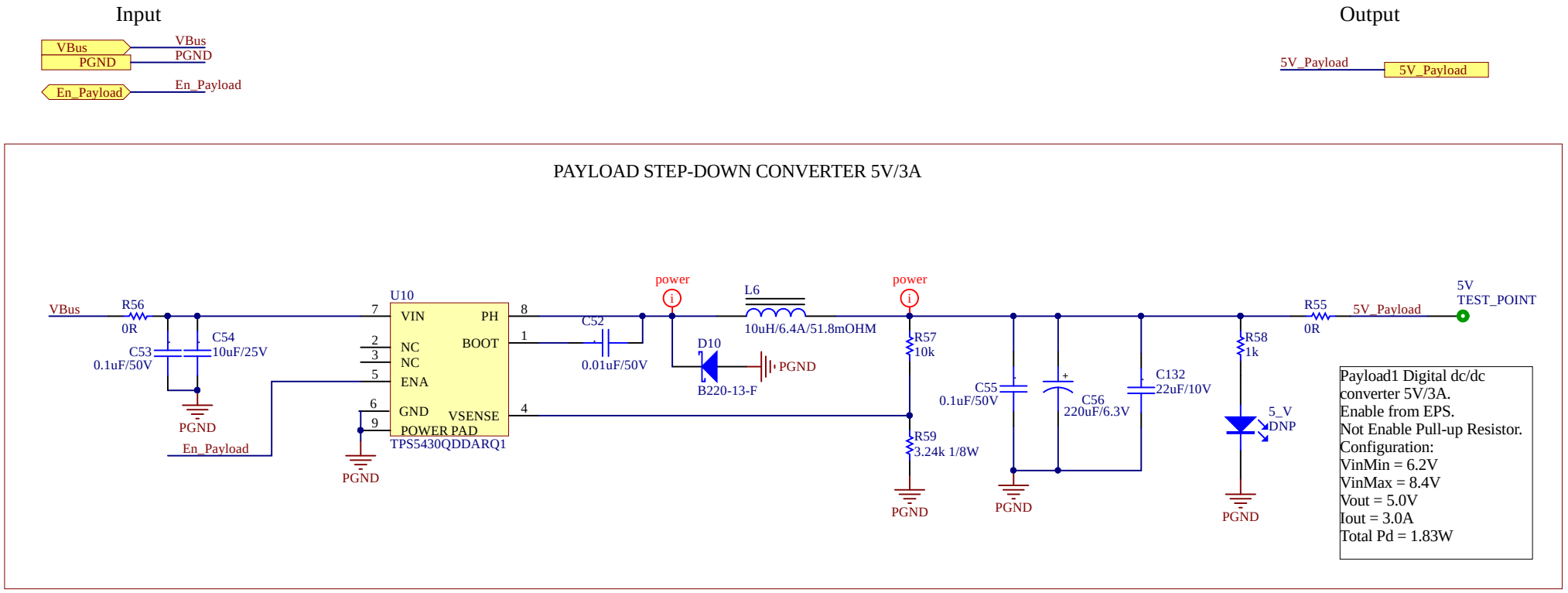

SpaceLab - Federal University of Santa Catarina			
Project: *eps2_project.prjpcb / [No Variations]*			
Title: *Payloads Step-Down Converters 5V/3A*			
Designed by: *Andre M. P. Mattos*			
Date: 06/09/2020	Version: *v0.1*	Sheet *10* of *11*	Size: A4

BEACON RADIO STEP-DOWN CONVERTER 6V/5A

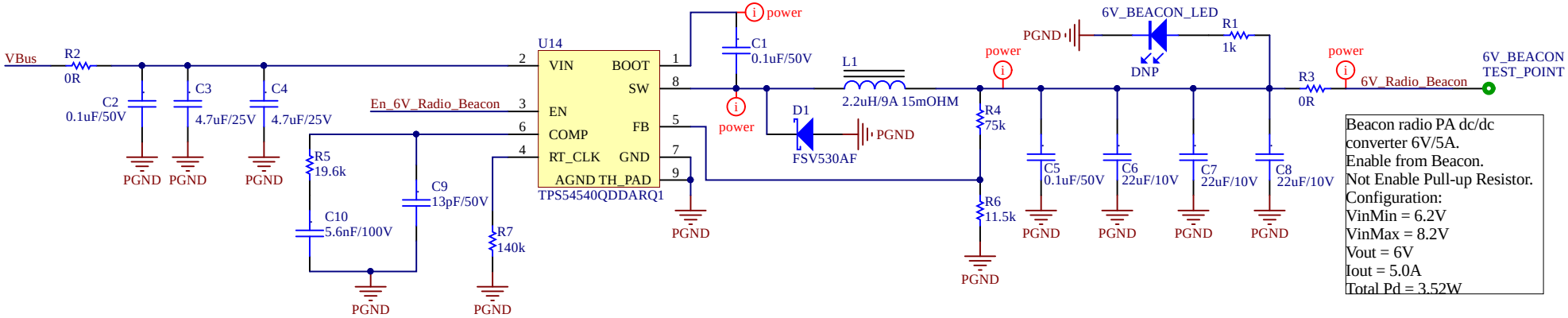

MAIN RADIO STEP-DOWN CONVERTER 5V/5A

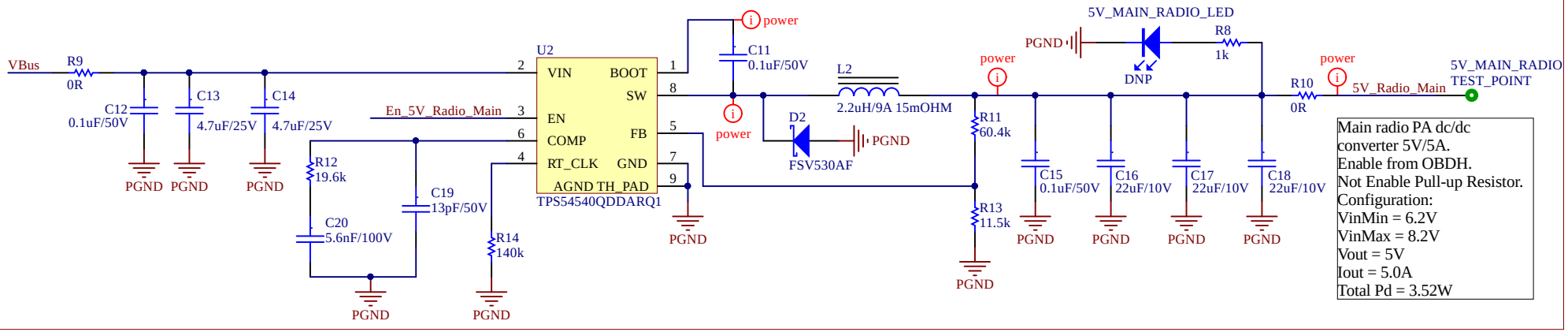

Input

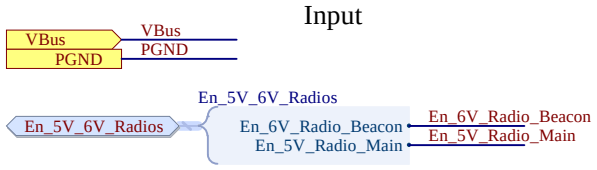

Output

SpaceLab - Federal University of Santa Catarina			
Project: *eps2_project.prjpcb / [No Variations]*			
Title: *Radios Step-Down Converters 5V/3A*			
Designed by: *Andre M. P. Mattos*			
Date: 06/09/2020	Version: *	Sheet *11* of *11*	Size: A4

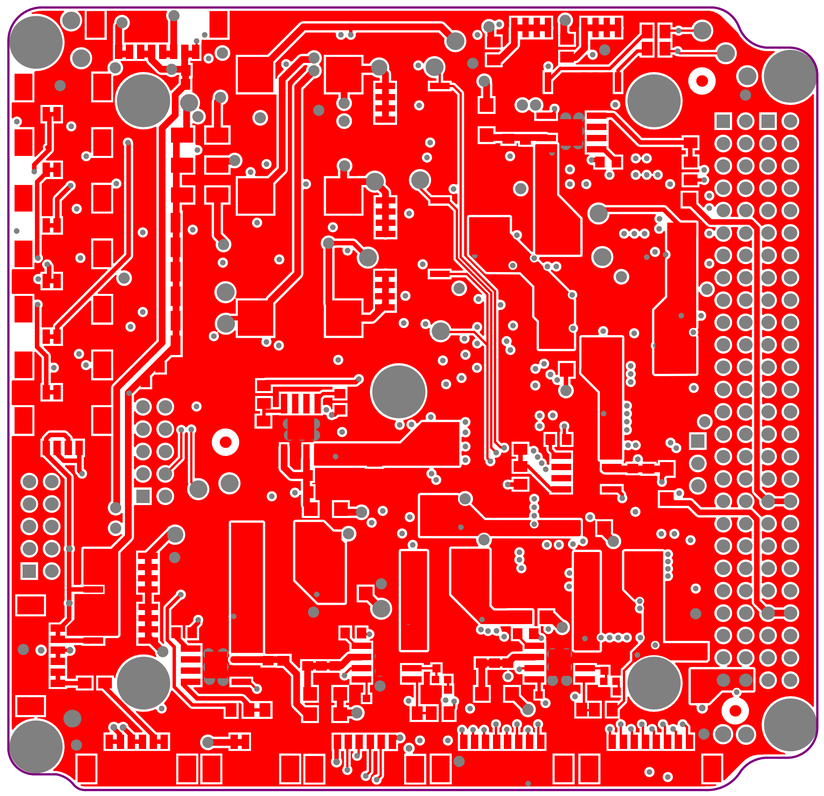

Layer	Name	Material	Thickness	Constant	Board Layer Stack
1	Top Overlay				
2	Top Solder	Solder Resist	0,010mm	3,5	
3	Top Layer	Copper	0,035mm		
4	Dielectric 1		0,100mm	4,2	
5	Signal Layer 1	Copper	0,018mm		
6	Core	FR-4	1,265mm	4,2	
7	Signal Layer 2	Copper	0,018mm		
8	Dielectric 2		0,100mm	4,2	
9	Bottom Layer	Copper	0,035mm		
10	Bottom Solder	Solder Resist	0,010mm	3,5	
11	Bottom Overlay				

Fabrication specifications:

- Copper base 1OZ:
- PCB Material: Prepeg FR4–Standard
- PCB Tickness: 1.6mm
- PCB Surface: HASL (with lead)
- Silkscreen Color: White (top and bottom)
- Soldermask Color: Blue
- Vias: Force Complete Tenting
- Special: Stack–up (herein included)

Assembly specifications:

- Solder composition: Include lead
- Fiducials: 3 top and 3 bottom avaliable
- Check BOM for not placed components

SpaceLab - Federal University of Santa Catarina		SPACE LAB
Project: EPS2		
Layer: Top Layer		
Designed by: Andre M. P. Mattos (based on FSat-I EPS)		Project Code: EPS2
Date: 06/09/2020	Version: v0.1	Size: A4

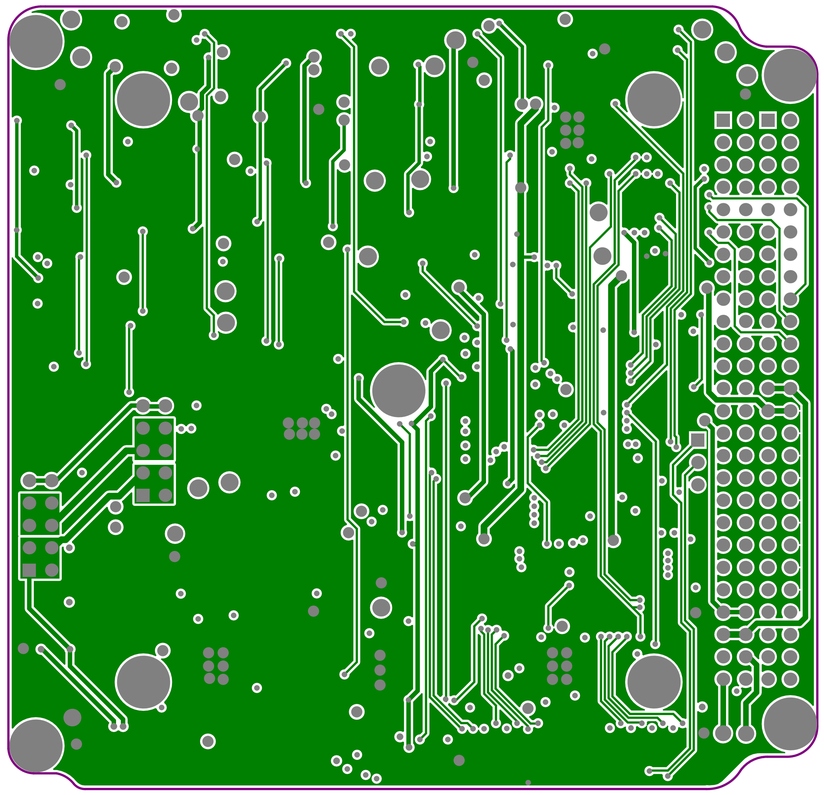

Layer	Name	Material	Thickness	Constant	Board Layer Stack
1	Top Overlay				
2	Top Solder	Solder Resist	0,010mm	3,5	
3	Top Layer	Copper	0,035mm		
4	Dielectric 1		0,100mm	4,2	
5	Signal Layer 1	Copper	0,018mm		
6	Core	FR-4	1,265mm	4,2	
7	Signal Layer 2	Copper	0,018mm		
8	Dielectric 2		0,100mm	4,2	
9	Bottom Layer	Copper	0,035mm		
10	Bottom Solder	Solder Resist	0,010mm	3,5	
11	Bottom Overlay				

Fabrication specifications:

- Copper base 1OZ:
- PCB Material: Prepeg FR4–Standard
- PCB Tickness: 1.6mm
- PCB Surface: HASL (with lead)
- Silkscreen Color: White (top and bottom)
- Soldermask Color: Blue
- Vias: Force Complete Tenting
- Special: Stack–up (herein included)

Assembly specifications:

- Solder composition: Include lead
- Fiducials: 3 top and 3 bottom avaliable
- Check BOM for not placed components

SpaceLab - Federal University of Santa Catarina		
Project: EPS2		
Layer: Signal Layer 1		
Designed by: Andre M. P. Mattos (based on FSat-I EPS)		Project Code: EPS2
Date: 06/09/2020	Version: v0.1	Size: A4

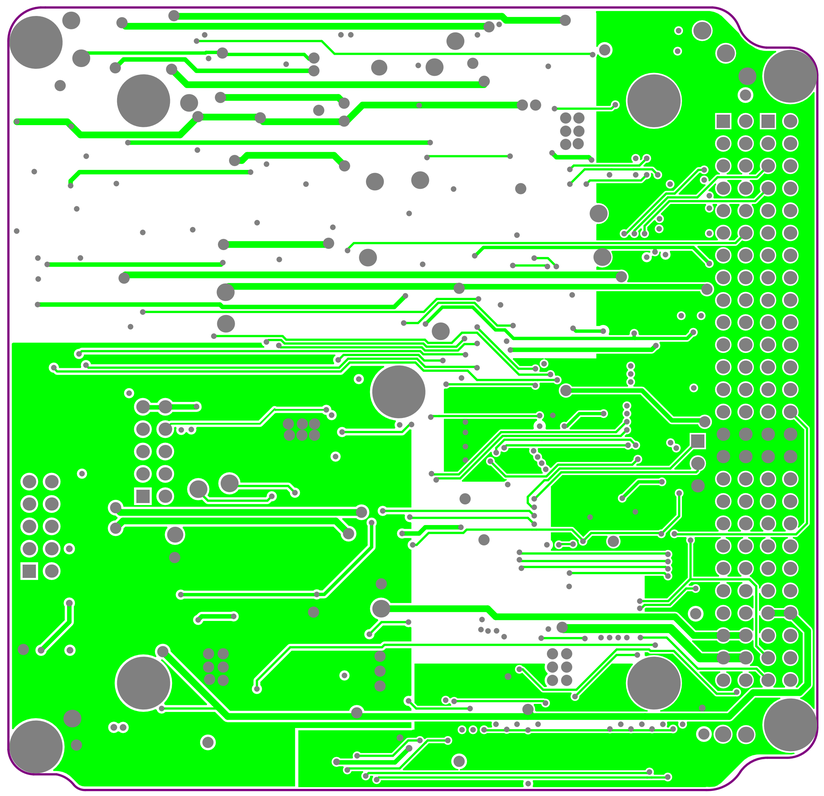

Layer	Name	Material	Thickness	Constant	Board Layer Stack
1	Top Overlay				
2	Top Solder	Solder Resist	0,010mm	3,5	
3	Top Layer	Copper	0,035mm		
4	Dielectric 1		0,100mm	4,2	
5	Signal Layer 1	Copper	0,018mm		
6	Core	FR-4	1,265mm	4,2	
7	Signal Layer 2	Copper	0,018mm		
8	Dielectric 2		0,100mm	4,2	
9	Bottom Layer	Copper	0,035mm		
10	Bottom Solder	Solder Resist	0,010mm	3,5	
11	Bottom Overlay				

Fabrication specifications:

- Copper base 1OZ:
- PCB Material: Prepeg FR4–Standard
- PCB Tickness: 1.6mm
- PCB Surface: HASL (with lead)
- Silkscreen Color: White (top and bottom)
- Soldermask Color: Blue
- Vias: Force Complete Tenting
- Special: Stack–up (herein included)

Assembly specifications:

- Solder composition: Include lead
- Fiducials: 3 top and 3 bottom avaliable
- Check BOM for not placed components

SpaceLab - Federal University of Santa Catarina		SPACE LAB
Project: EPS2		
Layer: Signal Layer 2		
Designed by: Andre M. P. Mattos (based on FSat-I EPS)		Project Code: EPS2
Date: 06/09/2020	Version: v0.1	Size: A4

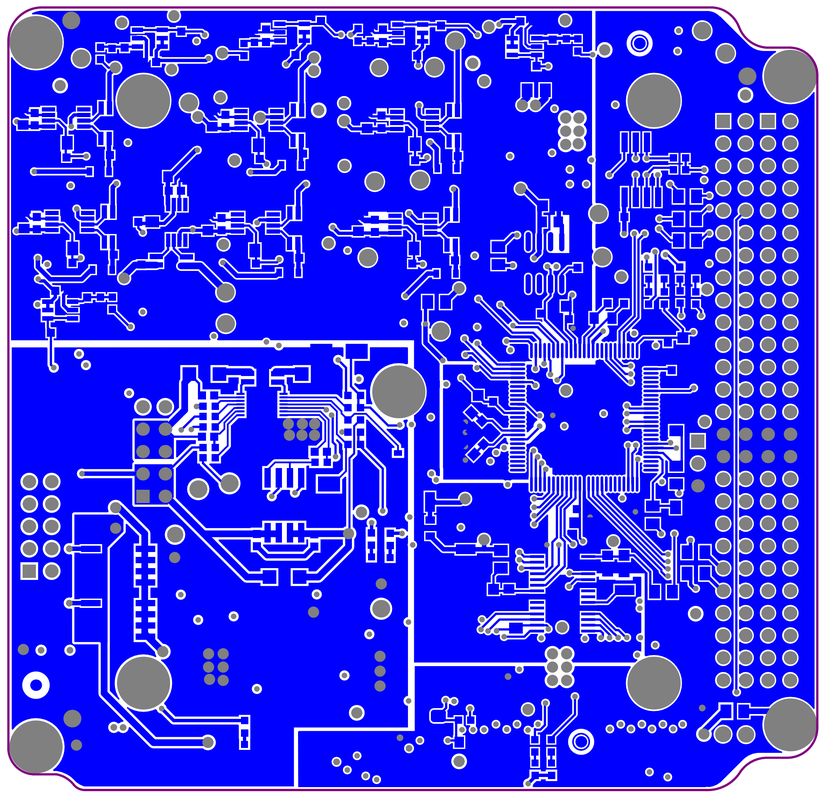

Layer	Name	Material	Thickness	Constant	Board Layer Stack
1	Top Overlay				
2	Top Solder	Solder Resist	0,010mm	3,5	
3	Top Layer	Copper	0,035mm		
4	Dielectric 1		0,100mm	4,2	
5	Signal Layer 1	Copper	0,018mm		
6	Core	FR-4	1,265mm	4,2	
7	Signal Layer 2	Copper	0,018mm		
8	Dielectric 2		0,100mm	4,2	
9	Bottom Layer	Copper	0,035mm		
10	Bottom Solder	Solder Resist	0,010mm	3,5	
11	Bottom Overlay				

Fabrication specifications:

- Copper base 1OZ:
- PCB Material: Prepeg FR4–Standard
- PCB Tickness: 1.6mm
- PCB Surface: HASL (with lead)
- Silkscreen Color: White (top and bottom)
- Soldermask Color: Blue
- Vias: Force Complete Tenting
- Special: Stack–up (herein included)

Assembly specifications:

- Solder composition: Include lead
- Fiducials: 3 top and 3 bottom avaliable
- Check BOM for not placed components

SpaceLab - Federal University of Santa Catarina		SPACE LAB
Project: EPS2		
Layer: Bottom Layer		
Designed by: Andre M. P. Mattos (based on FSat-I EPS)		Project Code: EPS2
Date: 06/09/2020	Version: v0.1	Size: A4

Layer	Name	Material	Thickness	Constant	Board Layer Stack
1	Top Overlay				
2	Top Solder	Solder Resist	0,010mm	3,5	
3	Top Layer	Copper	0,035mm		
4	Dielectric 1		0,100mm	4,2	
5	Signal Layer 1	Copper	0,018mm		
6	Core	FR-4	1,265mm	4,2	
7	Signal Layer 2	Copper	0,018mm		
8	Dielectric 2		0,100mm	4,2	
9	Bottom Layer	Copper	0,035mm		
10	Bottom Solder	Solder Resist	0,010mm	3,5	
11	Bottom Overlay				

Fabrication specifications:

- Copper base 1OZ:
- PCB Material: Prepeg FR4–Standard
- PCB Tickness: 1.6mm
- PCB Surface: HASL (with lead)
- Silkscreen Color: White (top and bottom)
- Soldermask Color: Blue
- Vias: Force Complete Tenting
- Special: Stack–up (herein included)

Assembly specifications:

- Solder composition: Include lead
- Fiducials: 3 top and 3 bottom avaliable
- Check BOM for not placed components

SpaceLab - Federal University of Santa Catarina		
Project: EPS2		
Layer: ASM Top		
Designed by: Andre M. P. Mattos (based on FSat-I EPS)		Project Code: EPS2
Date: 06/09/2020	Version: v0.1	Size: A4

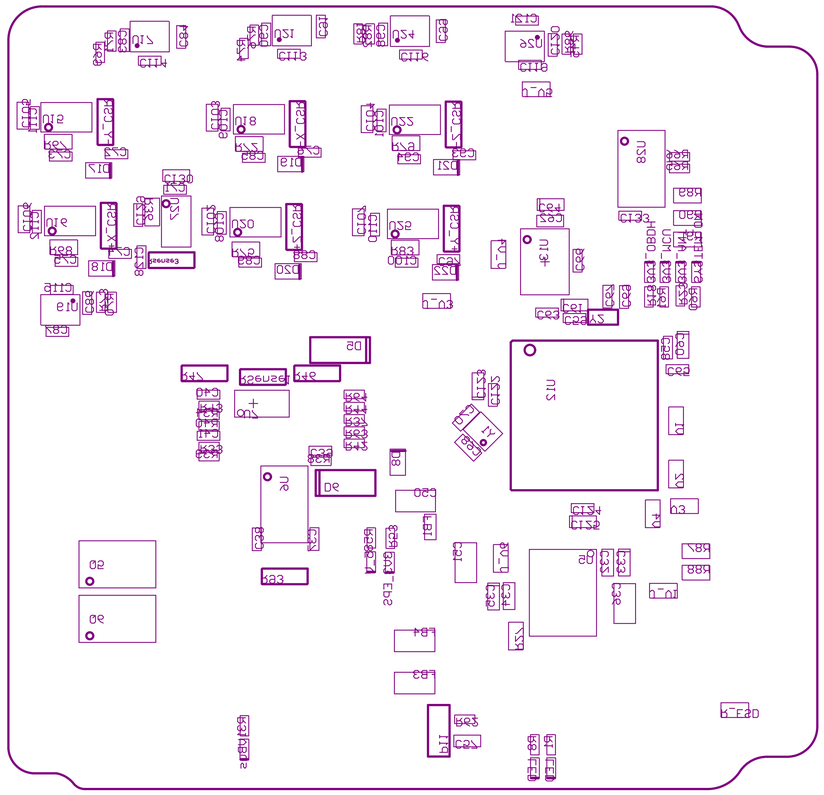

Layer	Name	Material	Thickness	Constant	Board Layer Stack
1	Top Overlay				
2	Top Solder	Solder Resist	0,010mm	3,5	
3	Top Layer	Copper	0,035mm		
4	Dielectric 1		0,100mm	4,2	
5	Signal Layer 1	Copper	0,018mm		
6	Core	FR-4	1,265mm	4,2	
7	Signal Layer 2	Copper	0,018mm		
8	Dielectric 2		0,100mm	4,2	
9	Bottom Layer	Copper	0,035mm		
10	Bottom Solder	Solder Resist	0,010mm	3,5	
11	Bottom Overlay				

Fabrication specifications:

- Copper base 1OZ:
- PCB Material: Prepeg FR4–Standard
- PCB Tickness: 1.6mm
- PCB Surface: HASL (with lead)
- Silkscreen Color: White (top and bottom)
- Soldermask Color: Blue
- Vias: Force Complete Tenting
- Special: Stack–up (herein included)

Assembly specifications:

- Solder composition: Include lead
- Fiducials: 3 top and 3 bottom avaliable
- Check BOM for not placed components

SpaceLab - Federal University of Santa Catarina		
Project: EPS2		
Layer: ASM Bottom		
Designed by: Andre M. P. Mattos (based on FSat-I EPS)		Project Code: EPS2
Date: 06/09/2020	Version: v0.1	Size: A4

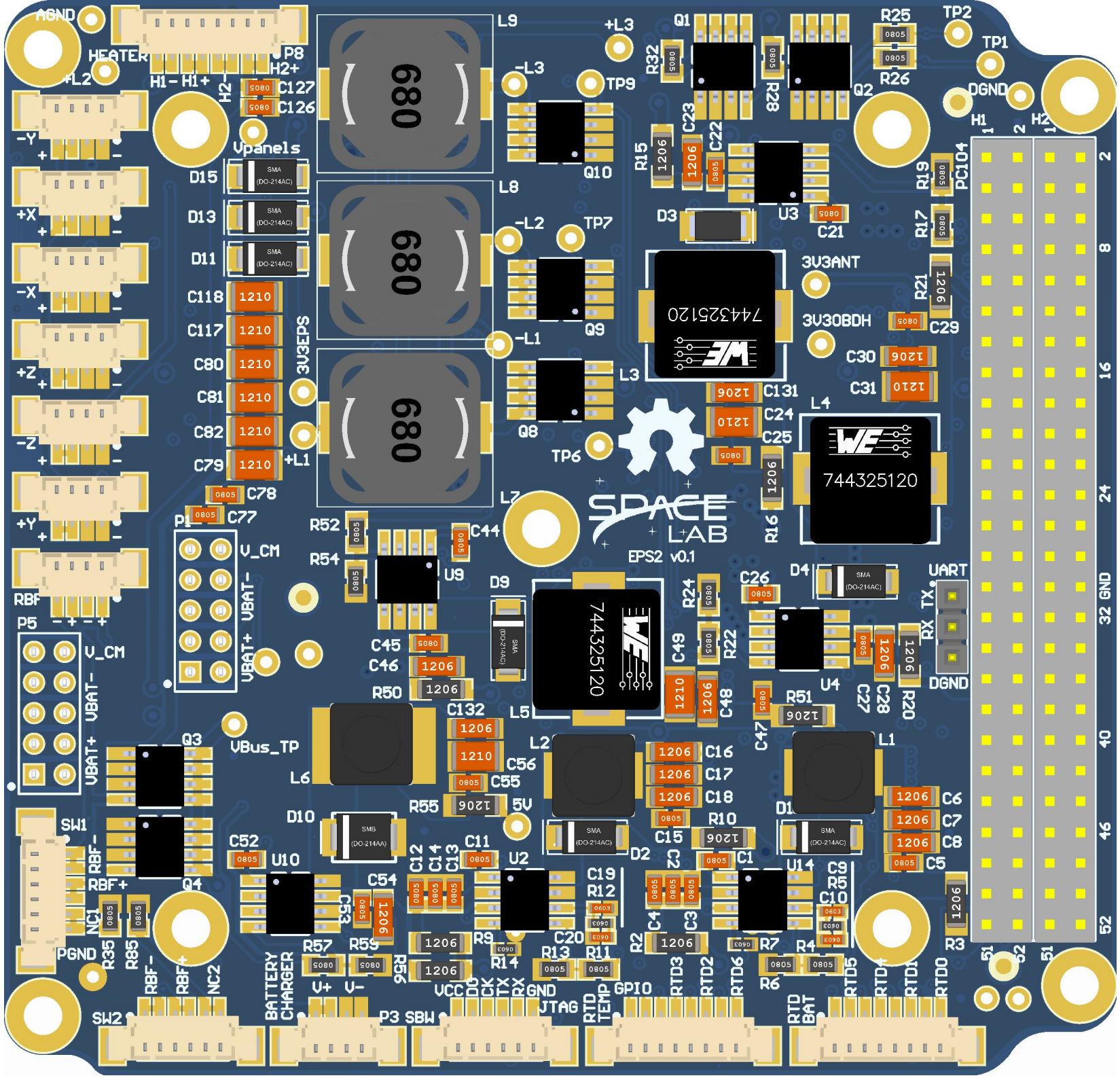
AGND
HEATER
P8
H1- H1+
H2+
H2-
C127
C126
Vpanels
D15
D13
D11
C118
C117
C80
C81
C82
C79
C78
C77
3V3EPS
+L1
-L1
-L2
+L2
-L3
+L3
L9
L8
L7
L6
L5
L4
L3
L2
L1
Q10
Q9
Q8
Q1
Q2
Q3
Q4
TP9
TP7
TP6
TP2
TP1
DGND
H1
H2
PC104
3V3ANT
3V3OBDH
744325120
EPS2 v0.1
SPACE LAB
UART
TX
RX
DGND
P1
V_CM
VBAT-
VBAT+
P5
VBus_TP
5V
SW1
RBF-
RBF+
NC1
NC2
PGND
SW2
BATTERY CHARGER
V+
V-
P3 SBW
VCC
DO
CK
TX
RX
GND
JTAG
RTD TEMP
GPIO
RTD3
RTD2
RTD6
RTD5
RTD4
RTD1
RTD0
RTD BAT
GND

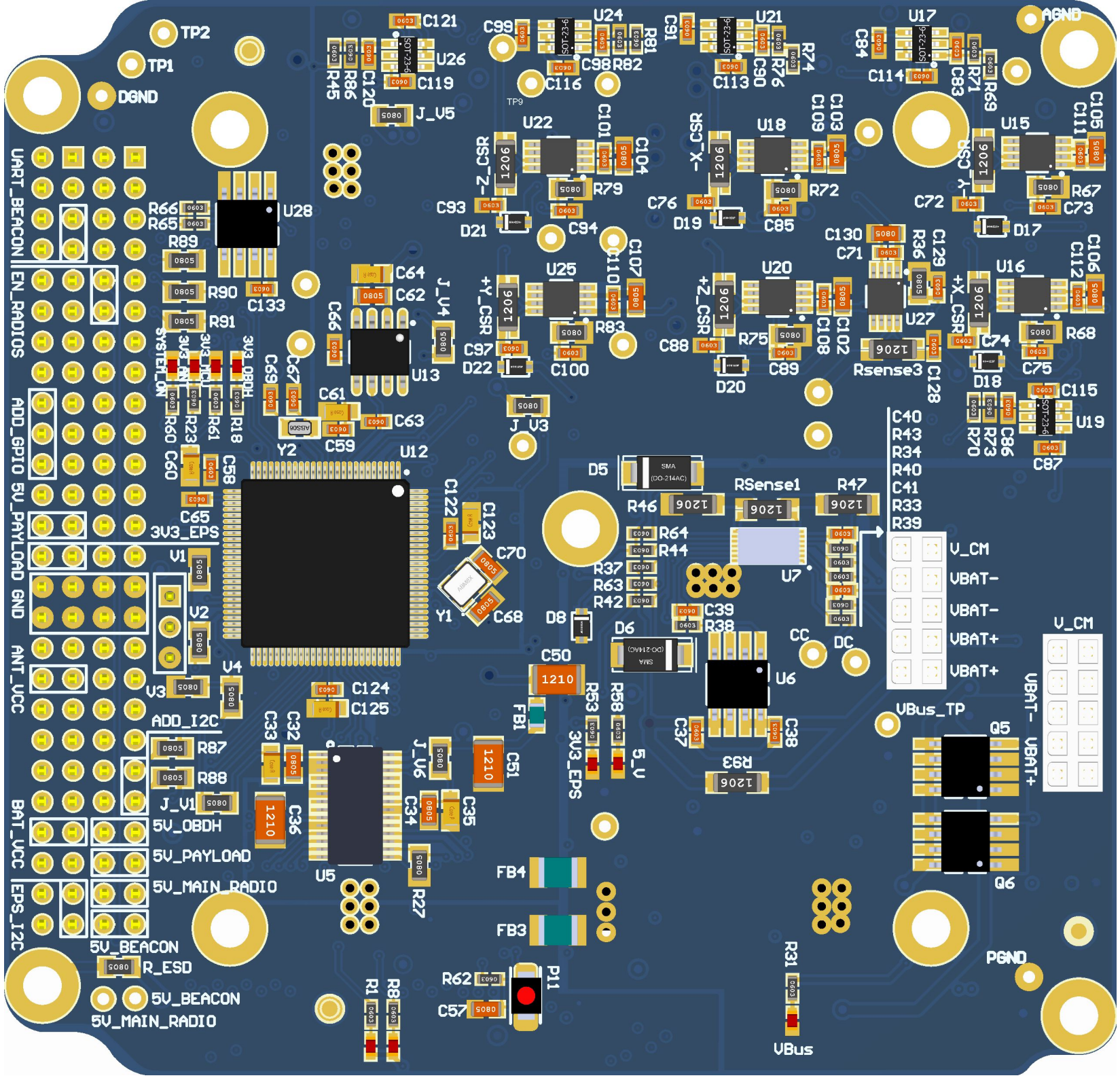
TP2
TP1
DGND
AGND
PGND
UART_BEACON
EN_RADIOS
ADD_GPIO
5V_PAYLOAD
GND
ANT_VCC
BAT_VCC
EPS_I2C
3V3_EPS
ADD_I2C
5V_OBDH
5V_PAYLOAD
5V_MAIN_RADIO
5V_BEACON
R_ESD
5V_BEACON
5V_MAIN_RADIO
V_CM
VBAT-
VBAT-
VBAT+
VBAT+
VBus_TP
VBus
RSense1
Rsense3
5_V
3V3_EPS
U28
U13
U12
U7
U6
U5
U19
U15
U16
U17
U18
U20
U21
U22
U24
U25
U26
U27
Q5
Q6
Y1
Y2
P11

Bill of Materials

Source Data From:	eps2_project.prjpcb
Project:	eps2_project.prjpcb
Variant:	None
Project Code:	EPS2
Report Date:	06/09/2020 18:59:06
Print Date:	06/09/2020 18:59:45

#	Partnumber	Comment	Description	Quantity	Designator	Fitted
1	CC0805KRX7R9BB104, CC0603KPX7R9BB104	0.1uF/50V	CAP CER 0.1UF 50V 10% X7R 0805, CAP CER 0.1UF 50V 10% X7R 0603	63	C1, C2, C5, C11, C12, C15, C22, C25, C27, C29, C40, C41, C45, C47, C53, C55, C58, C59, C62, C63, C71, C72, C73, C74, C75, C76, C77, C78, C83, C84, C85, C86, C87, C88, C89, C90, C91, C93, C94, C97, C98, C99, C100, C101, C108, C109, C110, C111, C112, C113, C114, C115, C116, C119, C120, C121, C122, C124, C126, C127, C128, C129, C133	Fitted
2	CRCW080500000Z0EA, HCJ1206ZT0R00	0R	RES 0R OHM 1/8W JUMPER 0805, RES 0.0 OHM 3/4W JUMP 1206	27	J_V1, J_V3, J_V4, J_V5, J_V6, R2, R3, R9, R10, R15, R16, R20, R21, R28, R32, R46, R47, R50, R51, R55, R56, R87, R88, R89, R90, R91, R93	Fitted
3	150060VS75000, NSVR0320MW2T1G, B3U-1000P, MCT0603MC1002FP500, 4-103327-5	DNP	SMD Green LED, DIODE SCHOTTKY 23V 1A SOD323F, Tactile Switch SPST-NO Top Actuated Surface Mount 12V 0.05A, RES 10K OHM 1/8W 1% 0603, Header, 3-Pin, Right Angle	19	3V3_ANT, 3V3_EPS, 3V3_MCU, 3V3_OBDH, 5_V, 5V_MAIN_RADIO_LED, 6V_BEACON_LED, D8, D17, D18, D19, D20, D21, D22, P11, R65, R66, UART, VBus	Fitted
4	MCT06030C1001FP500, [NoParam]	1k	RES 1.0K OHM 1/8W 1% 0603, RES SMD 1K OHM 1% 1/8W 0805	16	R1, R8, R18, R23, R25, R26, R31, R34, R37, R39, R40, R43, R53, R58, R60, R61	Fitted
5	CC0805KKX7R8BB475	4.7uF/25V	CAP CER 4.7uF 25V 10% X7R 0805	11	C3, C4, C13, C14, C102, C103, C104, C105, C106, C107, C130	Fitted
6	GRM31CR71A226KE15L	22uF/10V	CAP CER 22uF 10V 10% X7R 1206	10	C6, C7, C8, C16, C17, C18, C30, C48, C131, C132	Fitted
7	GRM32ER71E226KE15L	22uF/25V	CAP CER 22uF 25V 10% X7R 1210	9	C36, C50, C51, C79, C80, C81, C82, C117, C118	Fitted
8	5339B-0471	Header 4_PicoBlade	Header, 4-Pin	8	+X, +Y, +Z, P3, RBF, -X, -Y, -Z	Fitted
9	TPSR106K006R1000	10uF/10V	CAP Tantalum 10uF 6.3V 10% 0805	7	C33, C35, C60, C61, C64, C123, C125	Fitted
10	MAX9934TAUA+	MAX9934TAUA+	MAX9934TAUA+	7	U15, U16, U18, U20, U22, U25, U27	Fitted
11	08055C103KAT4A	0.01uF/50V	CAP CER 0.01uF 50V 10% X7R 0805	6	C21, C26, C32, C34, C44, C52	Fitted
12	LVK12R050DER	0.05R/0.5W	Current Sense Resistors - SMD 0.05ohm .5% 4 Terminal	6	+X_CSR, +Y_CSR, +Z_CSR, -X_CSR, -Y_CSR, -Z_CSR	Fitted
13	CPF0805B3K3E1	3k3	RES SMD 3.3K OHM 0.1% 1/10W 0805	6	R67, R68, R72, R75, R79, R83	Fitted
14	MCT0603MD4702DP500, RC0805FR-0747KL	47k	RES 47K OHM 1/8W 0.5% 0603, RES 47k OHM 1/10W 1% 0805	5	R62, V1, V2, V3, V4	Fitted
15	CRCW0603100KFKEA	100K	RES 100K OHM 1/10W 1% 0603	5	R71, R73, R76, R82, R86	Fitted
16	B340LA-13-F	B340LA-13-F	DIODE SCHOTTKY 40V 3A B340LA-13-F	5	D4, D9, D11, D13, D15	Fitted
17	SI4166DY-T1-GE3	MOSFET-N	MOSFET N-Channel 30V Vds 20V Vgs SO-8	5	Q1, Q2, Q8, Q9, Q10	Fitted
18	TLV341AIDBVR	TLV341AIDBVR	TLV341AIDBVR	5	U17, U19, U21, U24, U26	Fitted
19	CRCW080510K0FKEA	10k	RES 10K OHM 1/8W 1% 0805	4	R17, R22, R52, R57	Fitted
20	GRM31CR71E106KA12L	10uF/25V	CAP CER 10uF 25V 10% X7R 1206	4	C23, C28, C46, C54	Fitted
21	6TPE220MAZB	220uF/6.3V	CAP Tantalum 220uF 6.3V 20% 1210	4	C24, C31, C49, C56	Fitted
22	SI4403CDY-T1-GE3	MOSFET-P-SI4403CDY-T1-GE3	MOSFET 1.8V P-Channel 20 V, 0.0155 Ω typ., 13.4 A	4	Q3, Q4, Q5, Q6	Fitted
23	71-CRCW0805-5.9K-E3	5k9	RES 5k9 OHM 1/8W 1% 0805	3	R19, R24, R54	Fitted
24	HC9-220-R	22uH/6.3/25.7mOHM	HC9 Series - 22uH / 6.3A / 25.7mOHM	3	L7, L8, L9	Fitted
25	CRCW060393K1FKEA	93K1	RES 93.1K OHM 1/10W 1% 0603	3	R69, R74, R81	Fitted
26	CRCW0603150RFKEA	150R	RES 150R OHM 1/10W 1% 0603	3	R33, R42, R44	Fitted
27	5339B-0671	Header 6H_PicoBlade	Header, 6-Pin, Right Angle	3	SBW, SW1, SW2	Fitted
28	53261-0871	Header 8_PicoBlade	Header, 8-Pin	3	P8, RTD1, RTD2	Fitted
29	C1608X7R1H474K080AE	0.47uF/50V	CAP CER 0.47UF 50V 10% X7R 0603	2	C39, C65	Fitted
30	SRP6540-2R2M	2.2uH/9A 15mOHM	INDUCTOR 2.2UH 9A SMD	2	L1, L2	Fitted
31	3SMAJ5919B-TP	3SMAJ5919B-TP	DIODE ZENER 5.6V 3W DO214AC	2	D5, D6	Fitted
32	MCT06030C4701FP500	4K7	RES 4K7 OHM 1/8W 1% 0603	2	R63, R64	Fitted
33	C1608C0G2A562J080AE	5.6nF/100V	CAP CER 5.6nF 100V 0603	2	C10, C20	Fitted
34	08051A100FAT2A	10pF/100V	CAP CER 10pF 100V 0805	2	C68, C70	Fitted
35	AC0805FR-0711K5L	11.5k	RES 11.5k OHM 1/8W 1% 0805	2	R6, R13	Fitted
36	GQM1885C1H120GB01D	12pF/50V	CAP CER 12pF 50V 0603	2	C67, C69	Fitted
37	C0603C130J5GAC7867	13pF/50V	CAP CER 13PF 50V 0603 NP0	2	C9, C19	Fitted
38	7443251600	16uH/5A/34.5mOHM	INDUCTOR 16UH 5A SMD	2	L4, L5	Fitted
39	ERJ-3EKF1962V	19.6k	RES 19.6k OHM 1/10W 1% 0603	2	R5, R12	Fitted
40	BLE32PN300SN1L	30R@100Mhz, 10A	Ferrite Bead 30 OHM 10A 100MHz	2	FB3, FB4	Fitted
41	CPF-A-0805B100KE	100K 1/10W	RES 100K OHM 1/10W 0.1% 0805	2	R35, R85	Fitted
42	ERJ-P03F1403V	140k	RES 140k OHM 1/5W 1% 0603	2	R7, R14	Fitted
43	RG1608P-304-B-T5	300K	RES 300K OHM 1/10W 0.1% 0603	2	R45, R70	Fitted
44	CC0603KRX7R9BB102	1000pF/50V	CAP CER 1000pF 50V 10% X7R 0603	2	C37, C38	Fitted
45	FSV530AF	FSV530AF	DIODE SCHOTTKY 30V 5A DO-214AA	2	D1, D2	Fitted
46	IPS1-105-01-S-D	Header 5X2IPS1-105-01-S-D	10 Position Receptacle Connector 0.100" (2.54mm)	2	P1, P5	Fitted
47	TPS5420QDRQ1	TPS5420QDRQ1	TPS5420QDRQ1	2	U4, U9	Fitted
48	TPS54540QDDARQ1	TPS54540QDDARQ1	TPS54540QDDARQ1	2	U2, U14	Fitted
49	LVK12R010DER	0.01R/0.5W	Current Sense Resistors - SMD 0.01ohm .5% 4 Terminal	1	RSense1	Fitted
50	06033C103JAT4A	0.01uF/25V	CAP CER 0.01UF 25V 5% X7R 0603	1	C66	Fitted
51	LVK12R075FER	0.075R/0.5W	Current Sense Resistors - SMD 1/2W 0.075 OHMS 1% 4 Terminal	1	Rsense3	Fitted
52	C0603X102J4RECAUTO	1nF/16V	CAP CER 1nF 16V 0603 5%	1	C57	Fitted
53	RG2012P-125-B-T5	1.2M	RES 1200K OHM 1/8W 0.1% 0805	1	R_ESD	Fitted
54	PCF0805R-1K65BT1	1.65K	RES 1.65K OHM 1/10W 0.1% 0805	1	R27	Fitted
55	CRCW08053K24FKEA	3.24k 1/8W	RES 3.24k OHM 1/8W 1% 0805 SMD	1	R59	Fitted
56	ERA-6AEB4021V	4.02k	RES 4.02k OHM 1/8W 0.1% 0805	1	R36	Fitted
57	IHLP3232DZER100M11	10uH/6.4A/51.8mOHM	INDUCTOR 2.2UH 6.4A SMD	1	L6	Fitted
58	7447798271	27uH/4.3A/42.5mOHM	INDUCTOR 27UH 4.3A SMD	1	L3	Fitted
59	BLM21PG300SN1D	30R@100Mhz, 3A	Ferrite Bead 30 OHM 3A 100MHz	1	FB1	Fitted
60	ABMBX-102-32.000MHZ-T	32MHz 10ppm	32MHz ±10ppm Crystal 10pF 60 Ohm -40°C ~ 125°C	1	Y1	Fitted
61	ECS-327-12.5-34S-TR	32.768kHz 12.5pF	32.768kHz ±20ppm Crystal 12.5pF 70 kOhm -40°C ~ 125°C	1	Y2	Fitted
62	ERJ-6ENF6042V	60.4k	RES 60.4k OHM 1/8W 1% 0805	1	R11	Fitted
63	RMCF0805FT75K0	75k	RES 75k OHM 1/8W 1% 0805	1	R4	Fitted
64	MCT06030C4700FP500	470R	RES 470R OHM 1/8W 1% 0603	1	R38	Fitted
65	ADS1248IPWR	ADS1248IPW	24 bit ADC Differential Input, SPI, 28-pin TSSOP	1	U5	Fitted
66	B220-13-F	B220-13-F	DIODE SCHOTTKY 20V 2A B220-13-F	1	D10	Fitted
67	CMS06(TE12L,Q,M)	CMS06(TE12L,Q,M)	DIODE SCHOTTKY 30V 2A CMS06(TE12L,Q,M)	1	D3	Fitted
68	DS2775G+	DS2775G+	IC FUEL GAUGE LI+ 2CELL 14-TDFN	1	U7	Fitted
69	FDS6898AZ	FDS6898AZ	MOSFET 2N-CH 20V 9.4A 8SOIC	1	U6	Fitted
70	MSP430F6659IPZR	MSP430F6659IPZR	Imported	1	U12	Fitted
71	SSW-126-01-G-D	PC104	PC104	1	PC104	Fitted
72	LTST-C191KFKT	RED	SMD Red LED	1	SYSTEM_ON	Fitted
73	REF5025AQDRQ1	REF5025AQDRQ1	REF5025A-Q1	1	U13	Fitted
74	TCA4311ADR	TCA4311ADR	IC SIGNAL BUFFER I2C 8SOIC	1	U28	Fitted
75	TPS5410QDRQ1	TPS5410QDRQ1	TPS5410QDRQ1	1	U3	Fitted
76	TPS5430QDDARQ1	TPS5430QDDARQ1	TPS5430QDDARQ1	1	U10	Fitted