Rev	Description	Date	Author
0.1	- Initial release - Update beacon radio output - General updates for compliance with the SpaceLab hardware development standards	28-Aug-2020	Andre M. P. Mattos
0.2	- Added variant types for test and flight models, draftsman source and PDF output - Updated schematic templates - Updating battery monitor and minor fixes	16-Jun-2021	Yan C. de Azeredo

Revision History

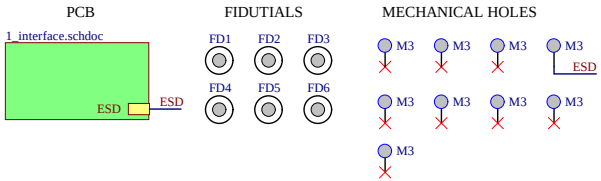

PCB Elements

EPS2 Hardware:

- Drawn by: André M. P. Mattos (updates from FloripaSat-I EPS)
- Based on FloripaSat-I OBDH designed by: Sara V. Martinez
- Reviewers: Kleber Gouveia and Yan C. Azeredo
- Support: Gabriel M. Marcelino

Project Contributions

Copyright © 2021
by Universidade Federal de Santa Catarina.

EPS2 Hardware
Based on the FloripaSat-I EPS

This work is licensed under the Creative Commons Attribution-ShareAlike 4.0 International License. To view a copy of this license, visit http://creativecommons.org/licenses/by-sa/4.0/.

Github repository: https://github.com/spacelab-ufsc/eps2

More info about SpaceLab: https://spacelab.ufsc.br/

Project Information

EPS 2 power diagram

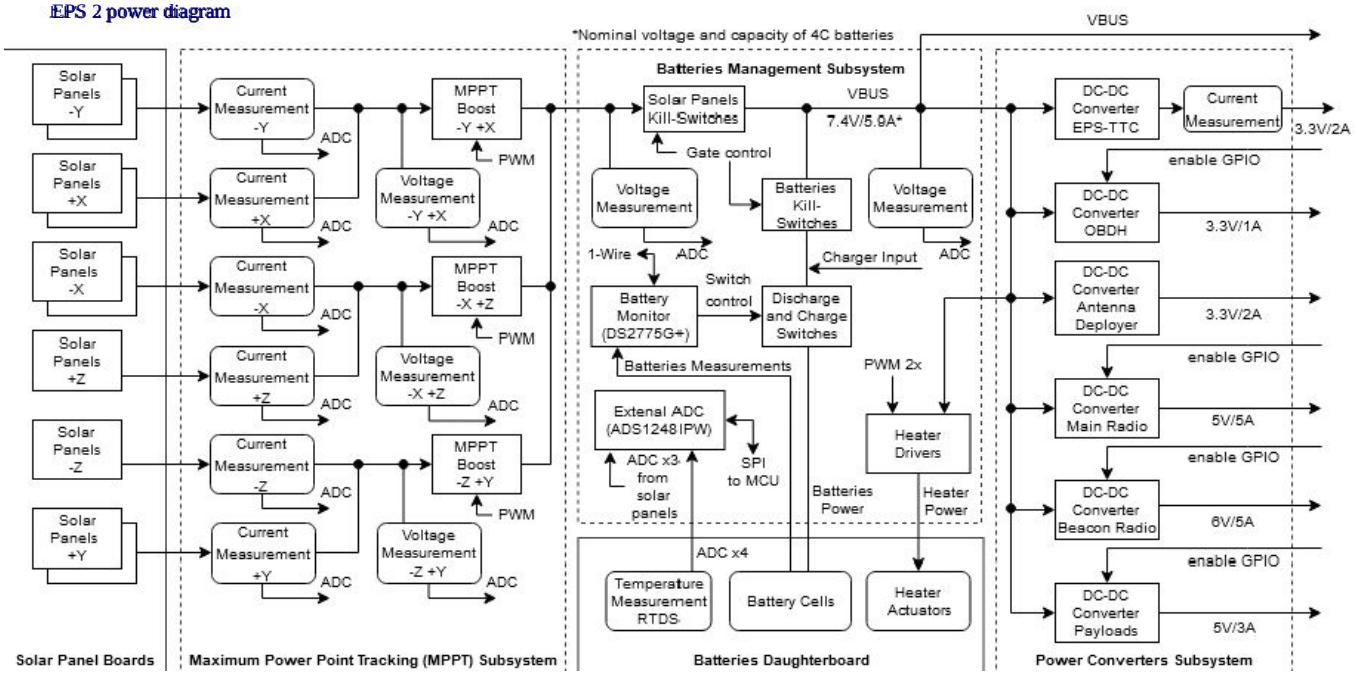

EPS 2 MCU diagram

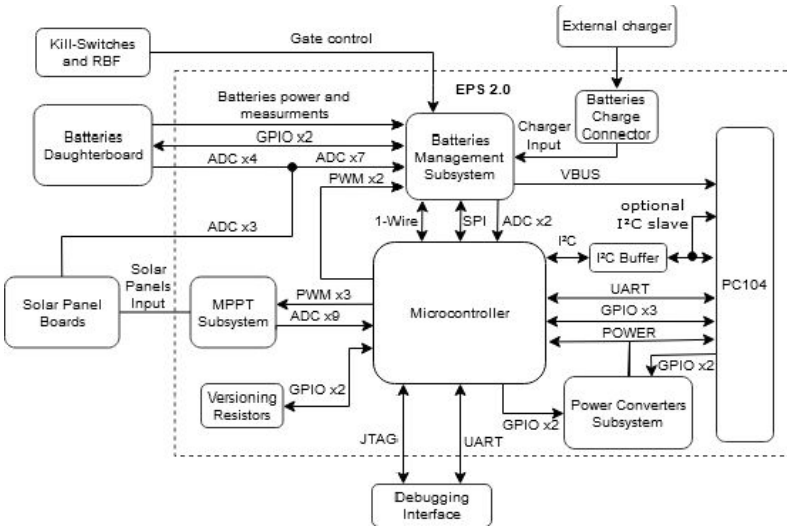

SpaceLab - Federal University of Santa Catarina			
Project: *eps2_project.prjpcb / [No Variations]*			
Title: *Block diagram*			
Engineer: *André M. P. Mattos*			Project Code: *EPS2*
Date: 16/06/2021	Revision: *v0.2*	Sheet *1* of *11*	Size: A3

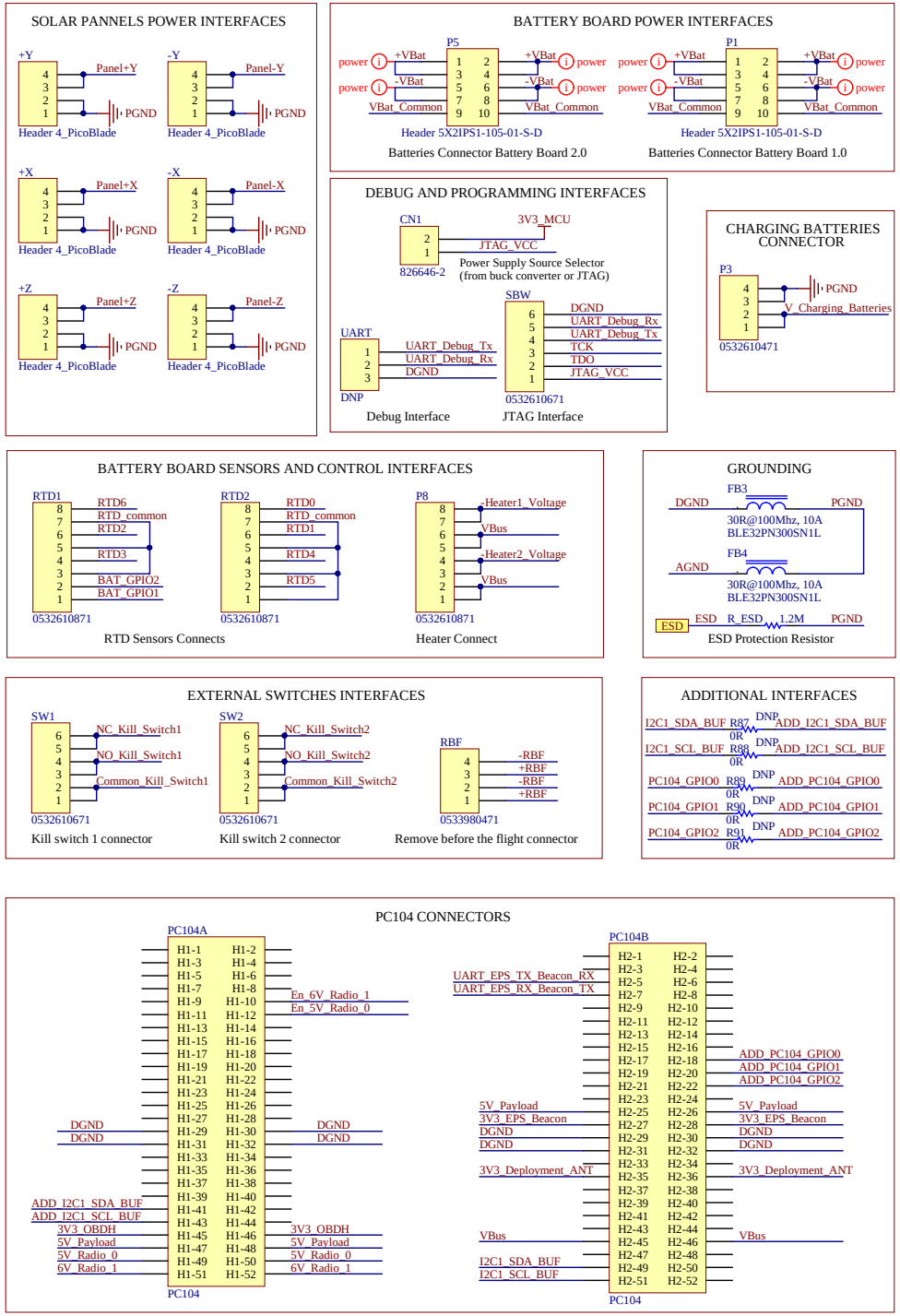

SpaceLab - Federal University of Santa Catarina			
Project: *eps2_project.prjpcb / [No Variations]*			
Title: *EPS Interface*			
Engineer: *André M. P. Mattos*			Project Code: *EPS2*
Date: 16/06/2021	Revision: *v0.2*	Sheet *2* of *11*	Size: A3

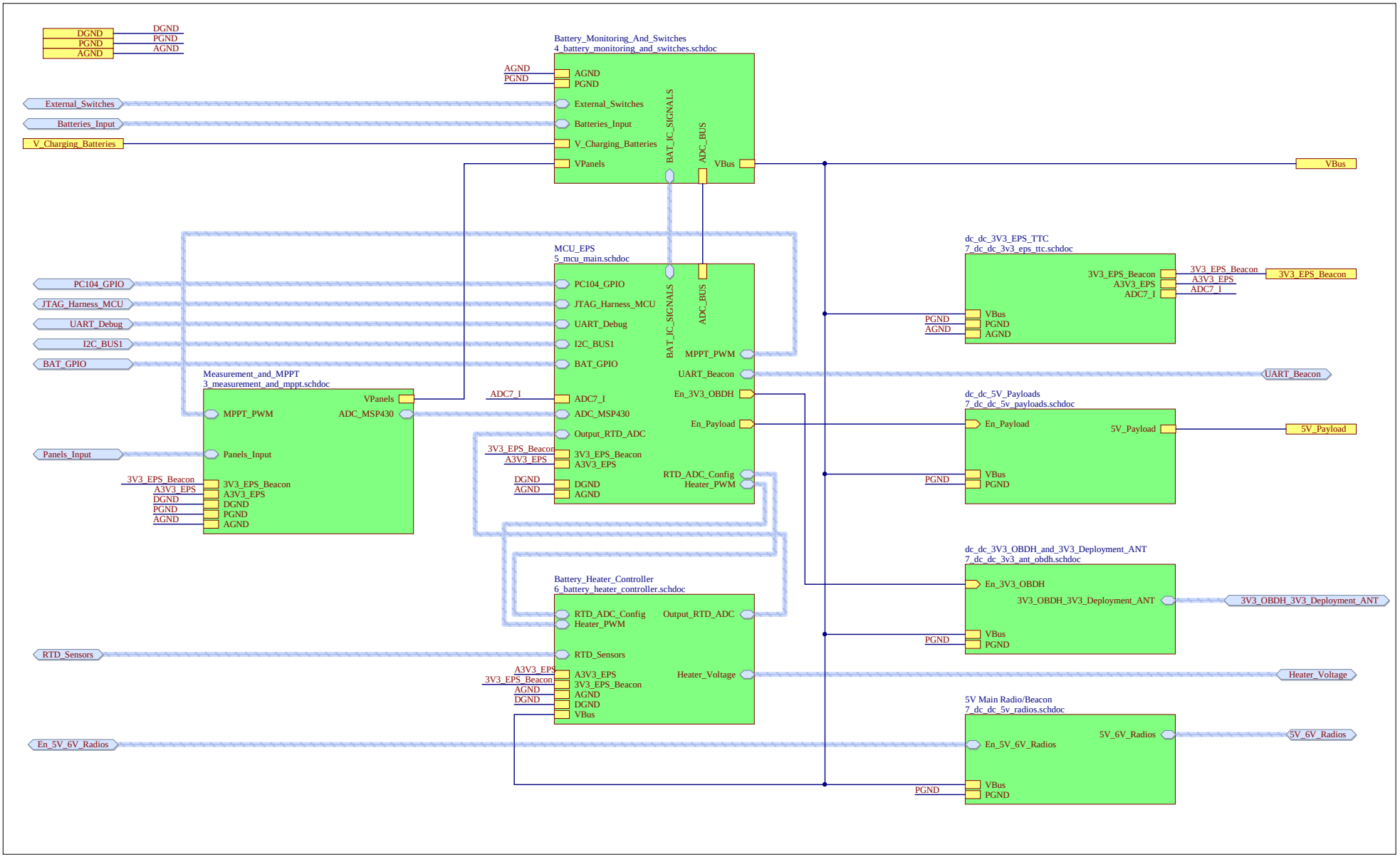

SpaceLab - Federal University of Santa Catarina			
Project: *eps2_project.prjpcb / [No Variations]*			
Title: *EPS Topology*			
Engineer: *André M. P. Mattos*			Project Code: *EPS2*
Date: 16/06/2021	Revision: *v0.2*	Sheet *3* of *11*	Size: A3

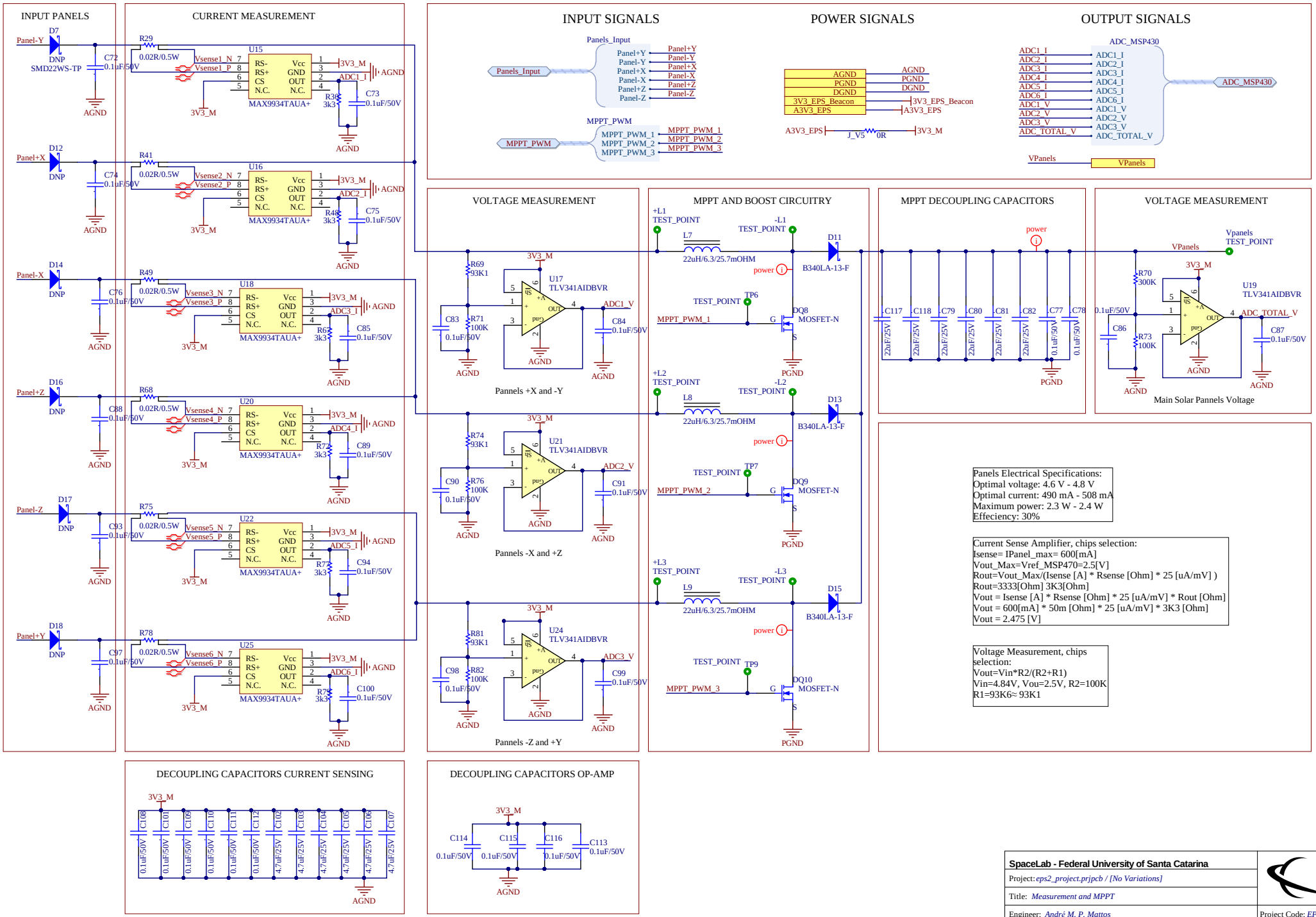
INPUT PANELS
CURRENT MEASUREMENT
INPUT SIGNALS
POWER SIGNALS
OUTPUT SIGNALS
Panels_Input
MPPT_PWM
ADC_MSP430
VPanels
VOLTAGE MEASUREMENT
MPPT AND BOOST CIRCUITRY
MPPT DECOUPLING CAPACITORS
VOLTAGE MEASUREMENT
Pannels +X and -Y
Pannels -X and +Z
Pannels -Z and +Y
Main Solar Pannels Voltage
Panels Electrical Specifications:
Optimal voltage: 4.6 V - 4.8 V
Optimal current: 490 mA - 508 mA
Maximum power: 2.3 W - 2.4 W
Effeciency: 30%
Current Sense Amplifier, chips selection:
Isense= IPanel_max= 600[mA]
Vout_Max=Vref_MSP470=2.5[V]
Rout=Vout_Max/(Isense [A] * Rsense [Ohm] * 25 [uA/mV])
Rout=3333[Ohm] 3K3[Ohm]
Vout = Isense [A] * Rsense [Ohm] * 25 [uA/mV] * Rout [Ohm]
Vout = 600[mA] * 50m [Ohm] * 25 [uA/mV] * 3K3 [Ohm]
Vout = 2.475 [V]
Voltage Measurement, chips selection:
Vout=Vin*R2/(R2+R1)
Vin=4.84V, Vou=2.5V, R2=100K
R1=93K6≈ 93K1
DECOUPLING CAPACITORS CURRENT SENSING
DECOUPLING CAPACITORS OP-AMP
SpaceLab - Federal University of Santa Catarina
Project: eps2_project.prjpcb / [No Variations]
Title: Measurement and MPPT
Engineer: André M. P. Mattos
Project Code: EPS2
Date: 16/06/2021
Revision: v0.2
Sheet 4 of 11
Size: A3

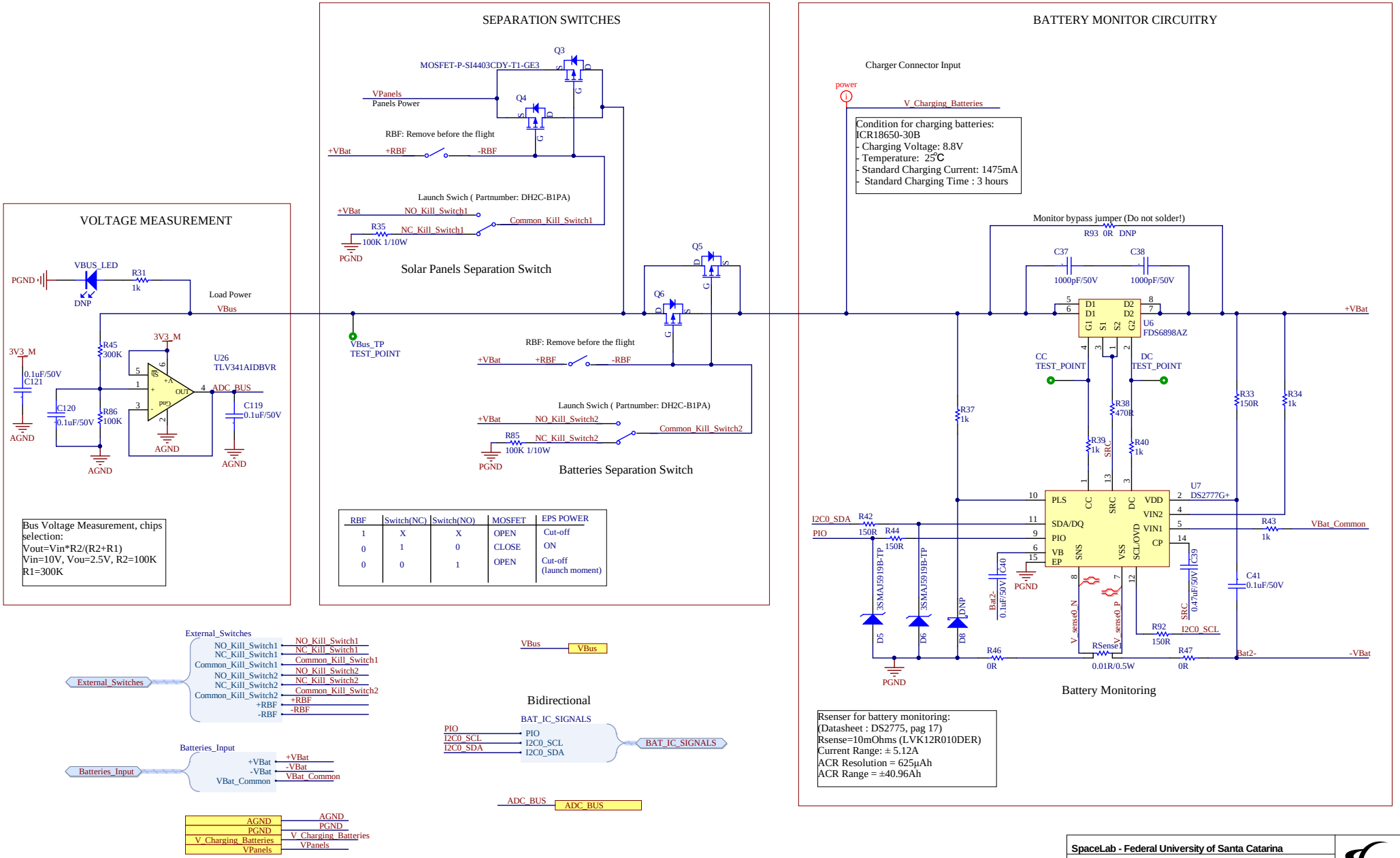

SpaceLab - Federal University of Santa Catarina

Project: *eps2_project.prjpcb / [No Variations]*

Title: *Batteries Monitor and Power Switches*

Engineer: *André M. P. Mattos*

Project Code: *EPS2*

Date: 16/06/2021 | Revision: *v0.2* | Sheet *5* of *11* | Size: A3

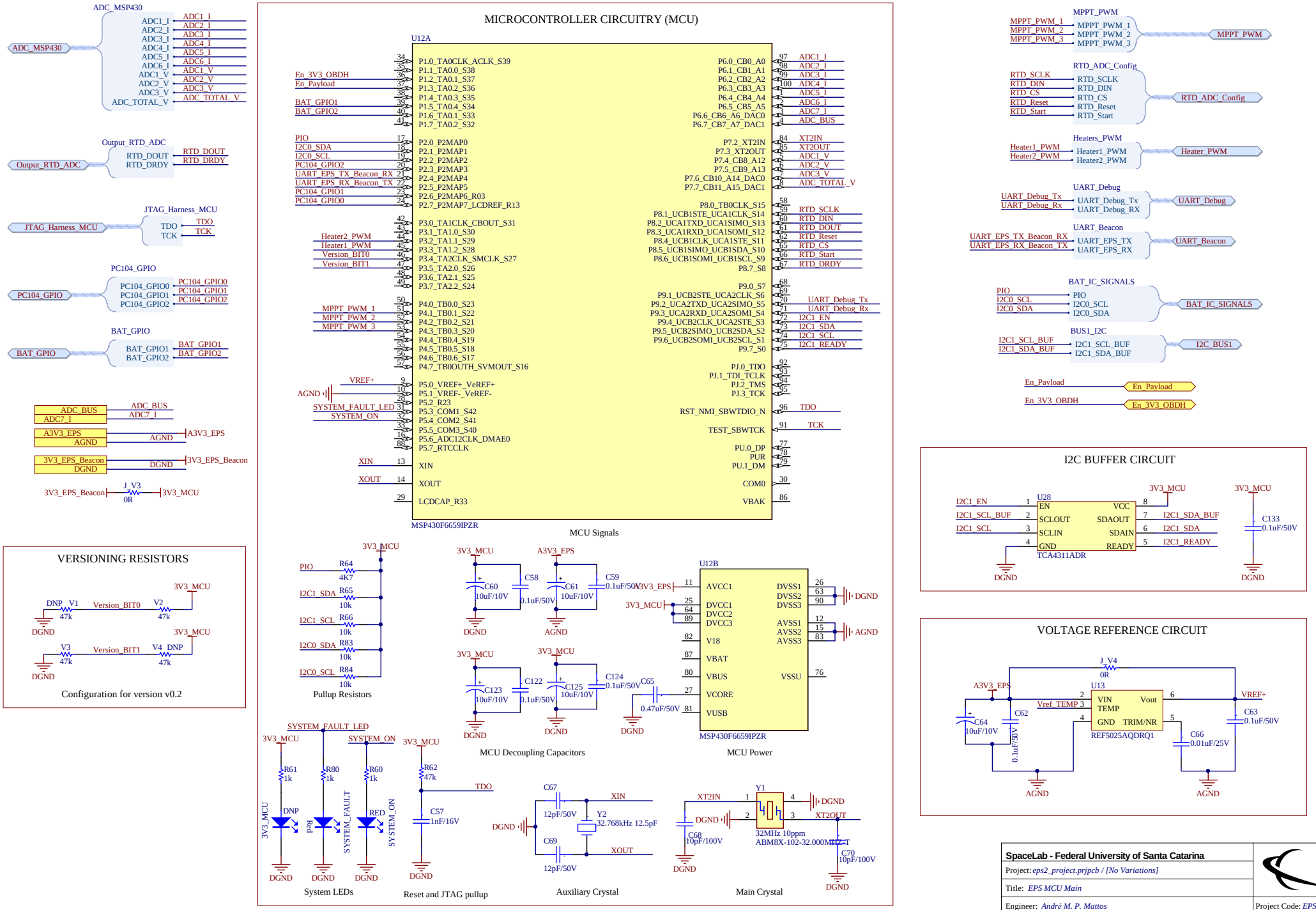
MICROCONTROLLER CIRCUITRY (MCU)
U12A
MSP430F6659IPZR
MCU Signals
ADC_MSP430
Output_RTD_ADC
JTAG_Harness_MCU
PC104_GPIO
BAT_GPIO
VERSIONING RESISTORS
Configuration for version v0.2
Pullup Resistors
MCU Decoupling Capacitors
U12B
MCU Power
System LEDs
Reset and JTAG pullup
Auxiliary Crystal
Main Crystal
MPPT_PWM
RTD_ADC_Config
Heaters_PWM
UART_Debug
UART_Beacon
BAT_IC_SIGNALS
BUS1_I2C
I2C BUFFER CIRCUIT
U28
TCA4311ADR
VOLTAGE REFERENCE CIRCUIT
U13
REF5025AQDRQ1
SpaceLab - Federal University of Santa Catarina
Project: eps2_project.prjpcb / [No Variations]
Title: EPS MCU Main
Engineer: André M. P. Mattos
Project Code: EPS2
Date: 16/06/2021
Revision: v0.2
Sheet 6 of 11
Size: A3

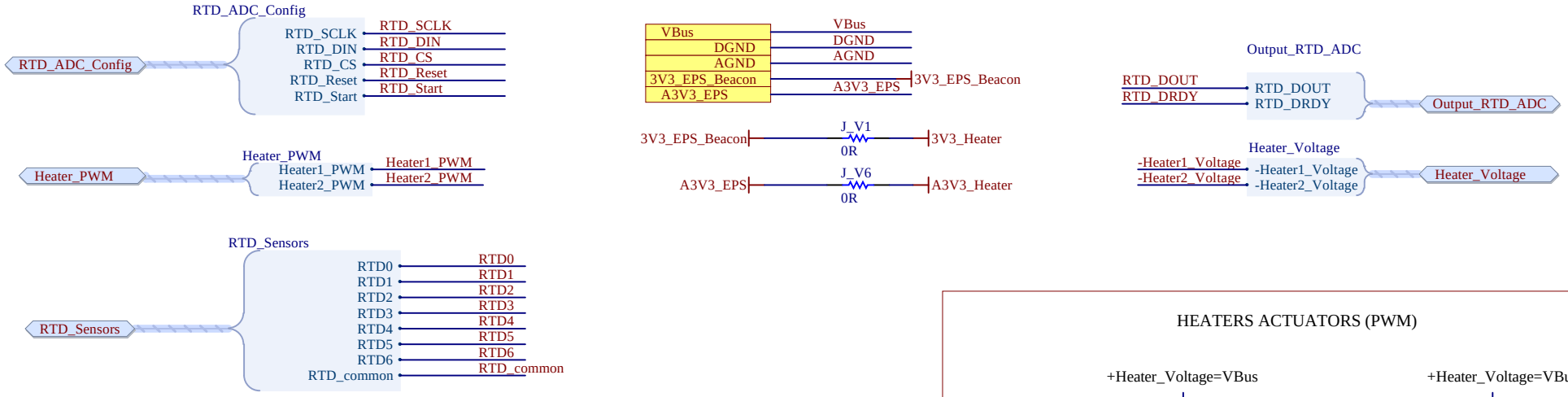

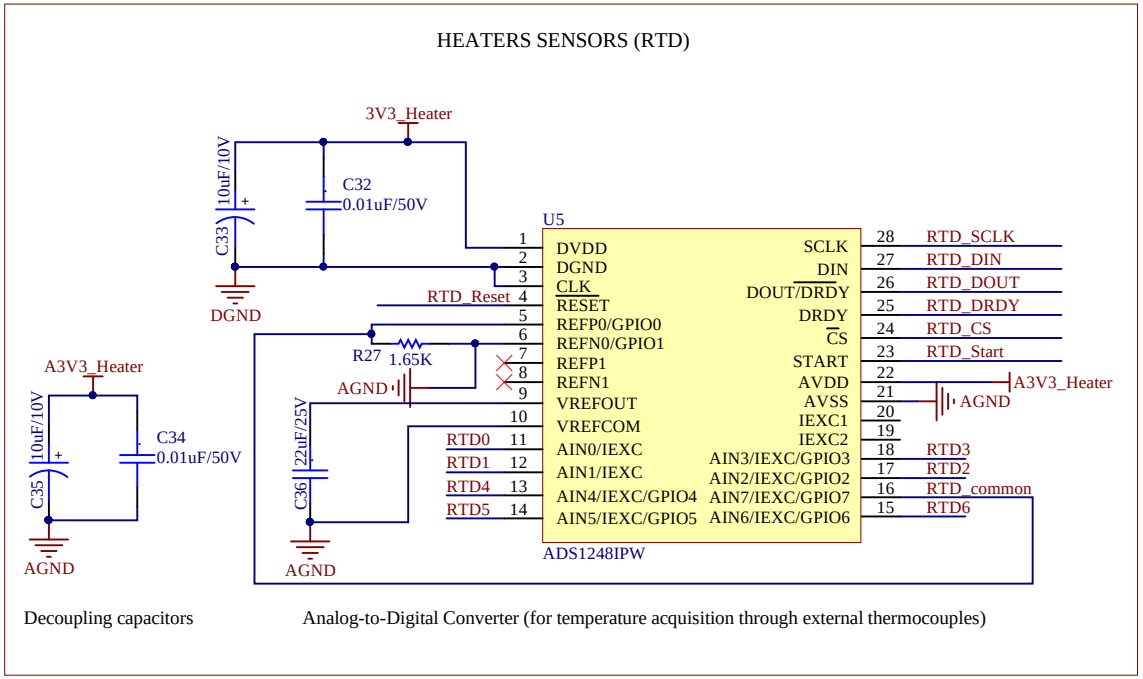

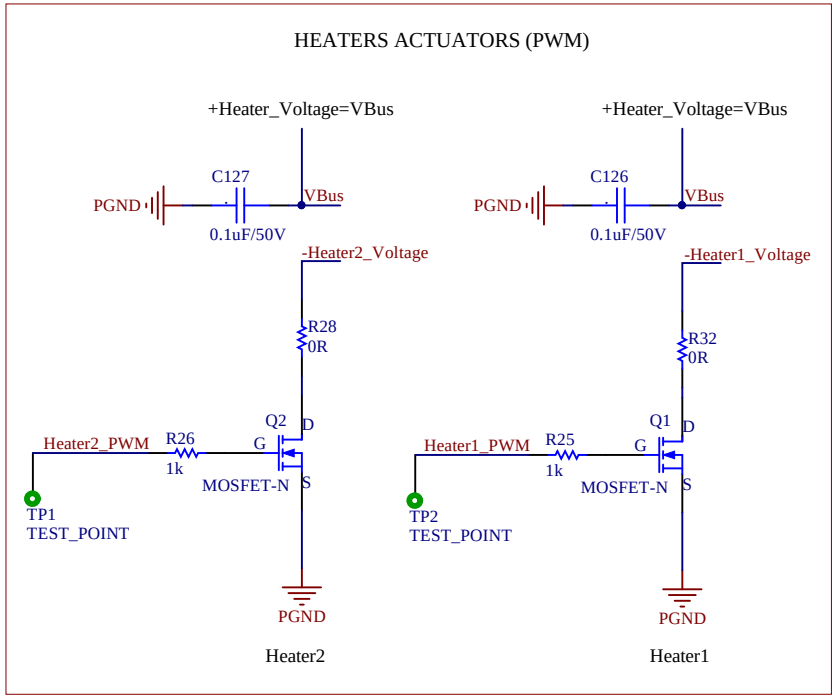

SpaceLab - Federal University of Santa Catarina			
Project: *eps2_project.prjpcb / [No Variations]*			
Title: *Batteries Heater Controller and RTD ADC*			
Designed by: *André M. P. Mattos*			Project Code: *EPS2*
Date: 16/06/2021	Revision: *v0.2*	Sheet *7* of *11*	Size: A4

OBDH STEP-DOWN CONVERTER 3V3/1A

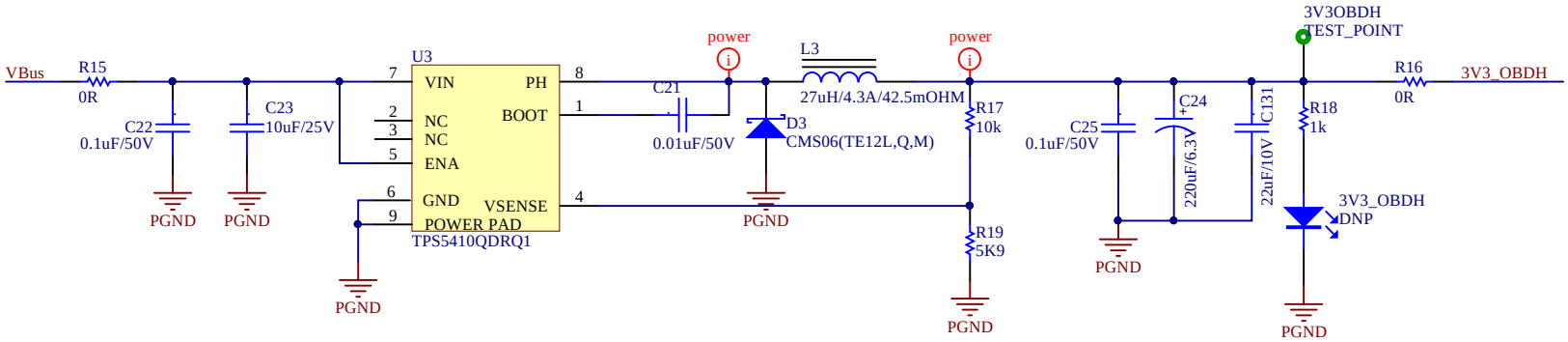

OBDH Digital dc/dc converter 3V3/1A.
Configuration:
VinMin = 6.5V
VinMax = 15.0V
Vout = 3.3V
Iout = 1A
Pd = 0.58W

ANTENNA DEPLOYER STEP-DOWN CONVERTER 3V3/2A

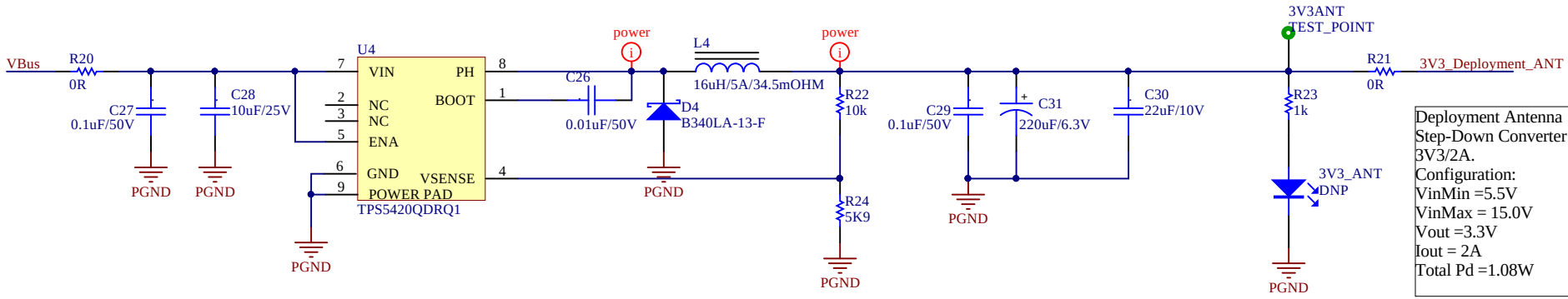

Deployment Antenna Step-Down Converter 3V3/2A.
Configuration:
VinMin =5.5V
VinMax = 15.0V
Vout =3.3V
Iout = 2A
Total Pd =1.08W

Input

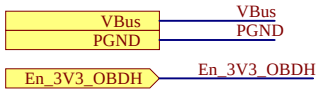

Output

SpaceLab - Federal University of Santa Catarina			
Project: *eps2_project.prjpcb / [No Variations]*			
Title: *OBDH and Antenna Deployment Step-Down (3V3/1A and 3V3/2A)*			
Designed by: *André M. P. Mattos*			Project Code: *EPS2*
Date: 16/06/2021	Revision: *v0.2*	Sheet *8* of *11*	Size: A4

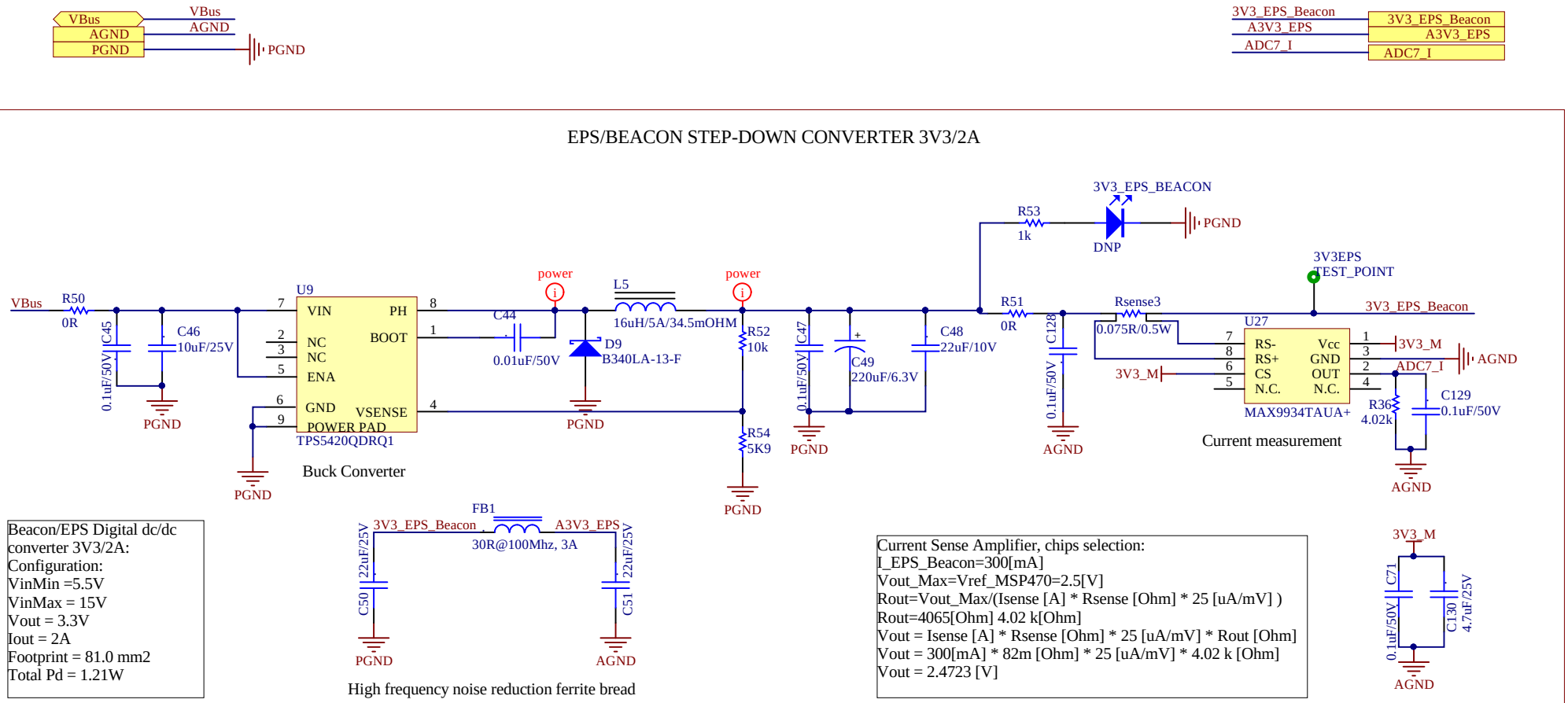

Beacon/EPS Digital dc/dc converter 3V3/2A:
Configuration:
VinMin =5.5V
VinMax = 15V
Vout = 3.3V
Iout = 2A
Footprint = 81.0 mm2
Total Pd = 1.21W

Current Sense Amplifier, chips selection:
I_EPS_Beacon=300[mA]
Vout_Max=Vref_MSP470=2.5[V]
Rout=Vout_Max/(Isense [A] * Rsense [Ohm] * 25 [uA/mV])
Rout=4065[Ohm] 4.02 k[Ohm]
Vout = Isense [A] * Rsense [Ohm] * 25 [uA/mV] * Rout [Ohm]
Vout = 300[mA] * 82m [Ohm] * 25 [uA/mV] * 4.02 k [Ohm]
Vout = 2.4723 [V]

SpaceLab - Federal University of Santa Catarina			
Project: *eps2_project.prjpcb / [No Variations]*			
Title: *EPS/Beacon Step-Down Converter (3V3/2A)*			
Designed by: *André M. P. Mattos*			Project Code: *EPS2*
Date: 16/06/2021	Revision: *v0.2*	Sheet *9* of *11*	Size: A4

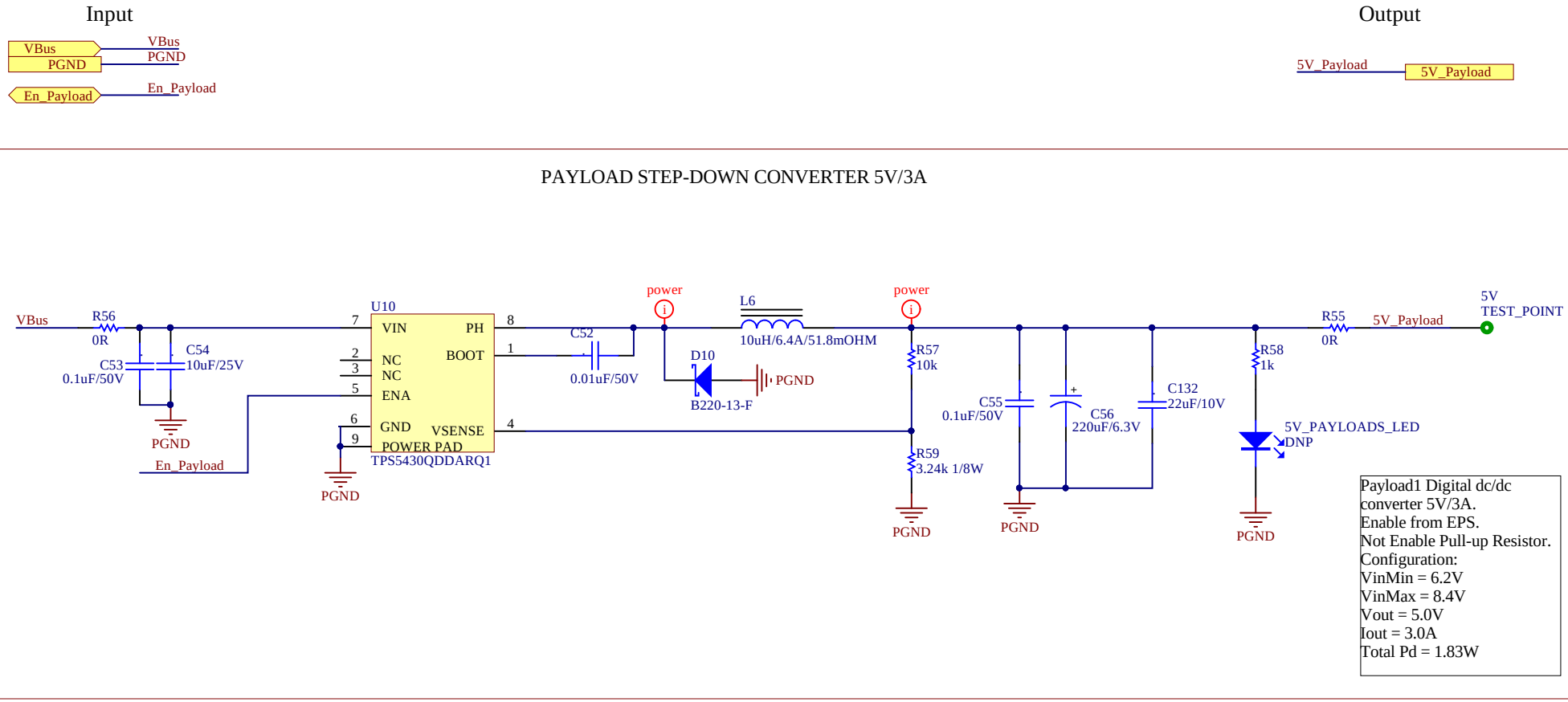

SpaceLab - Federal University of Santa Catarina			
Project: *eps2_project.prjpcb / [No Variations]*			
Title: *Payloads Step-Down Converters (5V/3A)*			
Designed by: *André M. P. Mattos*			Project Code: *EPS2*
Date: 16/06/2021	Revision: *v0.2*	Sheet *10* of *11*	Size: A4

"RADIO 1" STEP-DOWN CONVERTER 6V/5A

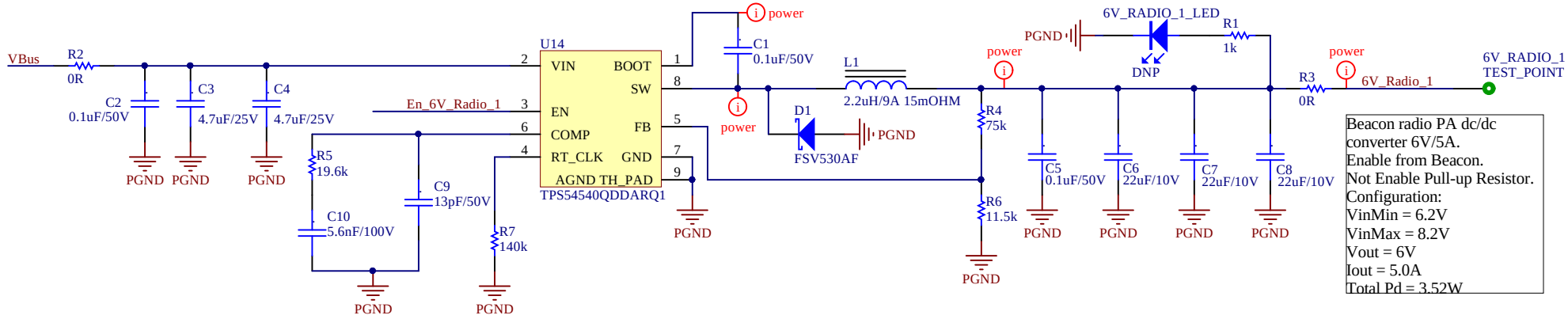

"RADIO 0" STEP-DOWN CONVERTER 5V/5A

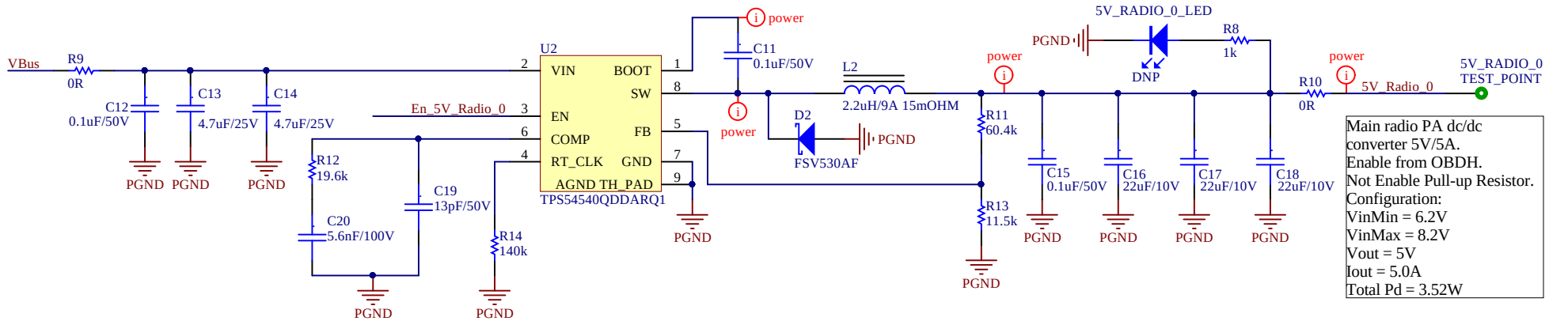

Input

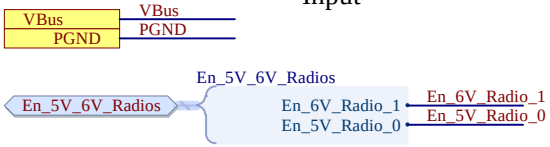

Output

SpaceLab - Federal University of Santa Catarina			
Project: *eps2_project.prjpcb / [No Variations]*			
Title: *Beacon and Main Radio Step-Down Converters (6V/3A and 5V/3A)*			
Designed by: *André M. P. Mattos*			Project Code: *EPS2*
Date: 16/06/2021	Revision: *v0.2*	Sheet *11* of *11*	Size: A4

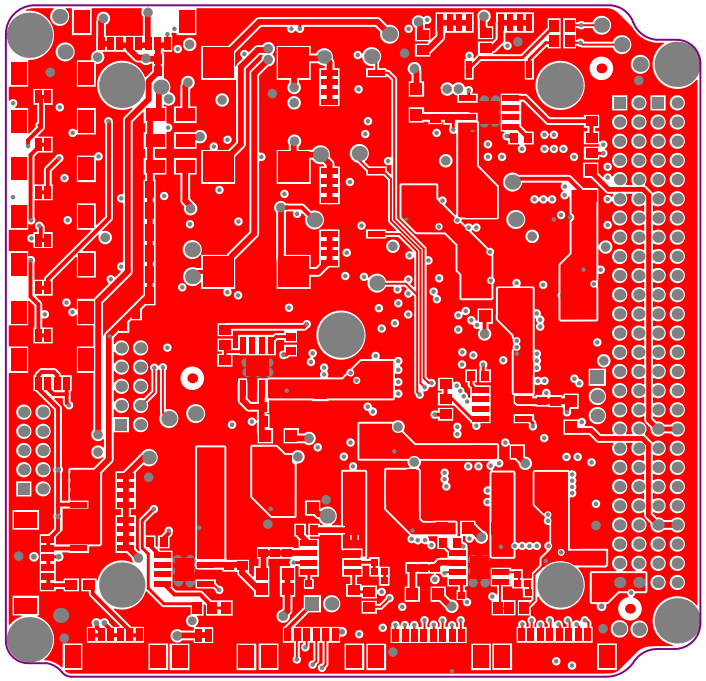

Layer	Name	Material	Thickness	Constant	Board Layer Stack
1	Top Overlay				
2	Top Solder	Solder Resist	0,010mm	3,5	
3	Top Layer	Copper	0,035mm		
4	Dielectric 1		0,110mm	4,2	
5	Signal Layer 1	Copper	0,035mm		
6	Core	FR-4	1,200mm	4,2	
7	Signal Layer 2	Copper	0,036mm		
8	Dielectric 2		0,110mm	4,2	
9	Bottom Layer	Copper	0,035mm		
10	Bottom Solder	Solder Resist	0,010mm	3,5	
11	Bottom Overlay				

Fabrication specifications:

- Copper base 1OZ:
- PCB Material: Prepeg FR4–Standard
- PCB Tickness: 1.6mm
- PCB Surface: HASL (with lead)
- Silkscreen Color: White (top and bottom)
- Soldermask Color: Green
- Vias: Force Complete Tenting
- Special: Stack–up (herein included)

Assembly specifications:

- Solder composition: Include lead
- Fiducials: 3 top and 3 bottom avaliable
- Check BOM for not placed components

SpaceLab - Federal University of Santa Catarina		SPACELAB
Project: EPS2		
Layer: Top Layer		
Designed by: Andre M. P. Mattos (based on FSat-I EPS)		Project Code: EPS2
Date: 16/06/2021	Version: v0.2	Size: A4

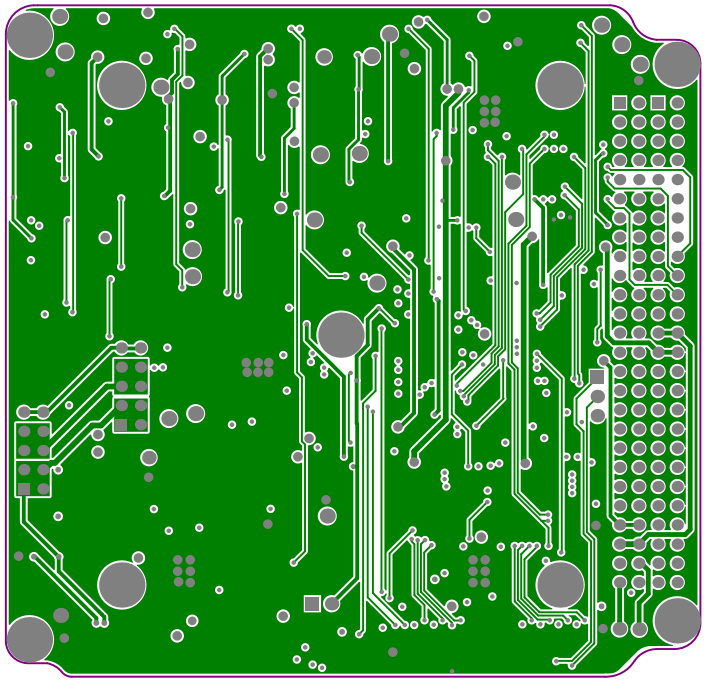

Layer	Name	Material	Thickness	Constant	Board Layer Stack
1	Top Overlay				
2	Top Solder	Solder Resist	0,010mm	3,5	
3	Top Layer	Copper	0,035mm		
4	Dielectric 1		0,110mm	4,2	
5	Signal Layer 1	Copper	0,035mm		
6	Core	FR-4	1,200mm	4,2	
7	Signal Layer 2	Copper	0,036mm		
8	Dielectric 2		0,110mm	4,2	
9	Bottom Layer	Copper	0,035mm		
10	Bottom Solder	Solder Resist	0,010mm	3,5	
11	Bottom Overlay				

Fabrication specifications:

- Copper base 1OZ:
- PCB Material: Prepeg FR4–Standard
- PCB Tickness: 1.6mm
- PCB Surface: HASL (with lead)
- Silkscreen Color: White (top and bottom)
- Soldermask Color: Green
- Vias: Force Complete Tenting
- Special: Stack–up (herein included)

Assembly specifications:

- Solder composition: Include lead
- Fiducials: 3 top and 3 bottom avaliable
- Check BOM for not placed components

SpaceLab - Federal University of Santa Catarina		SPACELAB
Project: EPS2		
Layer: Signal Layer 1		
Designed by: Andre M. P. Mattos (based on FSat-I EPS)		Project Code: EPS2
Date: 16/06/2021	Version: v0.2	Size: A4

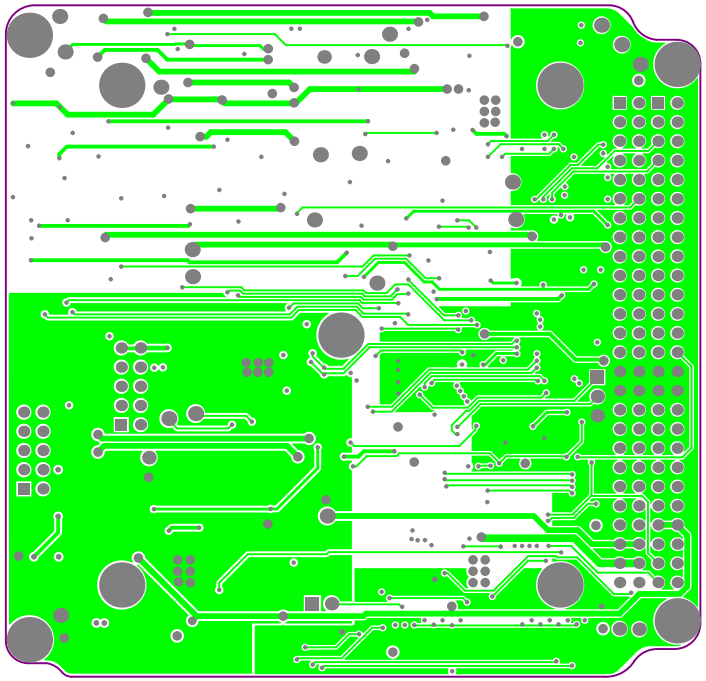

Layer	Name	Material	Thickness	Constant	Board Layer Stack
1	Top Overlay				
2	Top Solder	Solder Resist	0,010mm	3,5	
3	Top Layer	Copper	0,035mm		
4	Dielectric 1		0,110mm	4,2	
5	Signal Layer 1	Copper	0,035mm		
6	Core	FR-4	1,200mm	4,2	
7	Signal Layer 2	Copper	0,036mm		
8	Dielectric 2		0,110mm	4,2	
9	Bottom Layer	Copper	0,035mm		
10	Bottom Solder	Solder Resist	0,010mm	3,5	
11	Bottom Overlay				

Fabrication specifications:

- Copper base 1OZ:
- PCB Material: Prepeg FR4–Standard
- PCB Tickness: 1.6mm
- PCB Surface: HASL (with lead)
- Silkscreen Color: White (top and bottom)
- Soldermask Color: Green
- Vias: Force Complete Tenting
- Special: Stack–up (herein included)

Assembly specifications:

- Solder composition: Include lead
- Fiducials: 3 top and 3 bottom avaliable
- Check BOM for not placed components

SpaceLab - Federal University of Santa Catarina		SPACELAB
Project: EPS2		
Layer: Signal Layer 2		
Designed by: Andre M. P. Mattos (based on FSat-I EPS)		Project Code: EPS2
Date: 16/06/2021	Version: v0.2	Size: A4

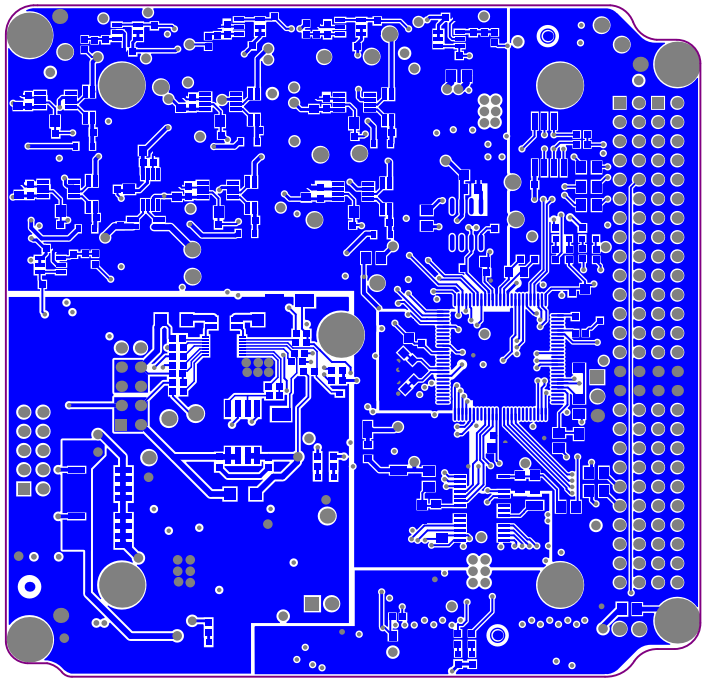

Layer	Name	Material	Thickness	Constant	Board Layer Stack
1	Top Overlay				
2	Top Solder	Solder Resist	0,010mm	3,5	
3	Top Layer	Copper	0,035mm		
4	Dielectric 1		0,110mm	4,2	
5	Signal Layer 1	Copper	0,035mm		
6	Core	FR-4	1,200mm	4,2	
7	Signal Layer 2	Copper	0,036mm		
8	Dielectric 2		0,110mm	4,2	
9	Bottom Layer	Copper	0,035mm		
10	Bottom Solder	Solder Resist	0,010mm	3,5	
11	Bottom Overlay				

Fabrication specifications:

- Copper base 1OZ:
- PCB Material: Prepeg FR4–Standard
- PCB Tickness: 1.6mm
- PCB Surface: HASL (with lead)
- Silkscreen Color: White (top and bottom)
- Soldermask Color: Green
- Vias: Force Complete Tenting
- Special: Stack–up (herein included)

Assembly specifications:

- Solder composition: Include lead
- Fiducials: 3 top and 3 bottom avaliable
- Check BOM for not placed components

SpaceLab - Federal University of Santa Catarina		SPACELAB
Project: EPS2		
Layer: Bottom Layer		
Designed by: Andre M. P. Mattos (based on FSat-I EPS)		Project Code: EPS2
Date: 16/06/2021	Version: v0.2	Size: A4

Layer	Name	Material	Thickness	Constant	Board Layer Stack
1	Top Overlay				
2	Top Solder	Solder Resist	0,010mm	3,5	
3	Top Layer	Copper	0,035mm		
4	Dielectric 1		0,110mm	4,2	
5	Signal Layer 1	Copper	0,035mm		
6	Core	FR-4	1,200mm	4,2	
7	Signal Layer 2	Copper	0,036mm		
8	Dielectric 2		0,110mm	4,2	
9	Bottom Layer	Copper	0,035mm		
10	Bottom Solder	Solder Resist	0,010mm	3,5	
11	Bottom Overlay				

Fabrication specifications:

- Copper base 1OZ:
- PCB Material: Prepeg FR4–Standard
- PCB Tickness: 1.6mm
- PCB Surface: HASL (with lead)
- Silkscreen Color: White (top and bottom)
- Soldermask Color: Green
- Vias: Force Complete Tenting
- Special: Stack–up (herein included)

Assembly specifications:

- Solder composition: Include lead
- Fiducials: 3 top and 3 bottom avaliable
- Check BOM for not placed components

SpaceLab - Federal University of Santa Catarina		SPACELAB
Project: EPS2		
Layer: ASM Top		
Designed by: Andre M. P. Mattos (based on FSat-I EPS)		Project Code: EPS2
Date: 16/06/2021	Version: v0.2	Size: A4

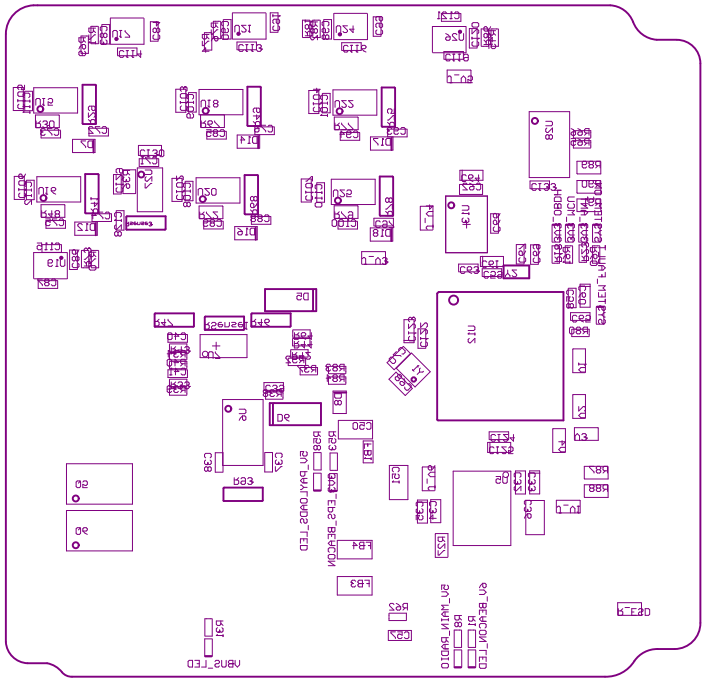

Layer	Name	Material	Thickness	Constant	Board Layer Stack
1	Top Overlay				
2	Top Solder	Solder Resist	0,010mm	3,5	
3	Top Layer	Copper	0,035mm		
4	Dielectric 1		0,110mm	4,2	
5	Signal Layer 1	Copper	0,035mm		
6	Core	FR-4	1,200mm	4,2	
7	Signal Layer 2	Copper	0,036mm		
8	Dielectric 2		0,110mm	4,2	
9	Bottom Layer	Copper	0,035mm		
10	Bottom Solder	Solder Resist	0,010mm	3,5	
11	Bottom Overlay				

Fabrication specifications:

- Copper base 1OZ:
- PCB Material: Prepeg FR4–Standard
- PCB Tickness: 1.6mm
- PCB Surface: HASL (with lead)
- Silkscreen Color: White (top and bottom)
- Soldermask Color: Green
- Vias: Force Complete Tenting
- Special: Stack–up (herein included)

Assembly specifications:

- Solder composition: Include lead
- Fiducials: 3 top and 3 bottom avaliable
- Check BOM for not placed components

SpaceLab - Federal University of Santa Catarina		SPACELAB
Project: EPS2		
Layer: ASM Bottom		
Designed by: Andre M. P. Mattos (based on FSat-I EPS)		Project Code: EPS2
Date: 16/06/2021	Version: v0.2	Size: A4

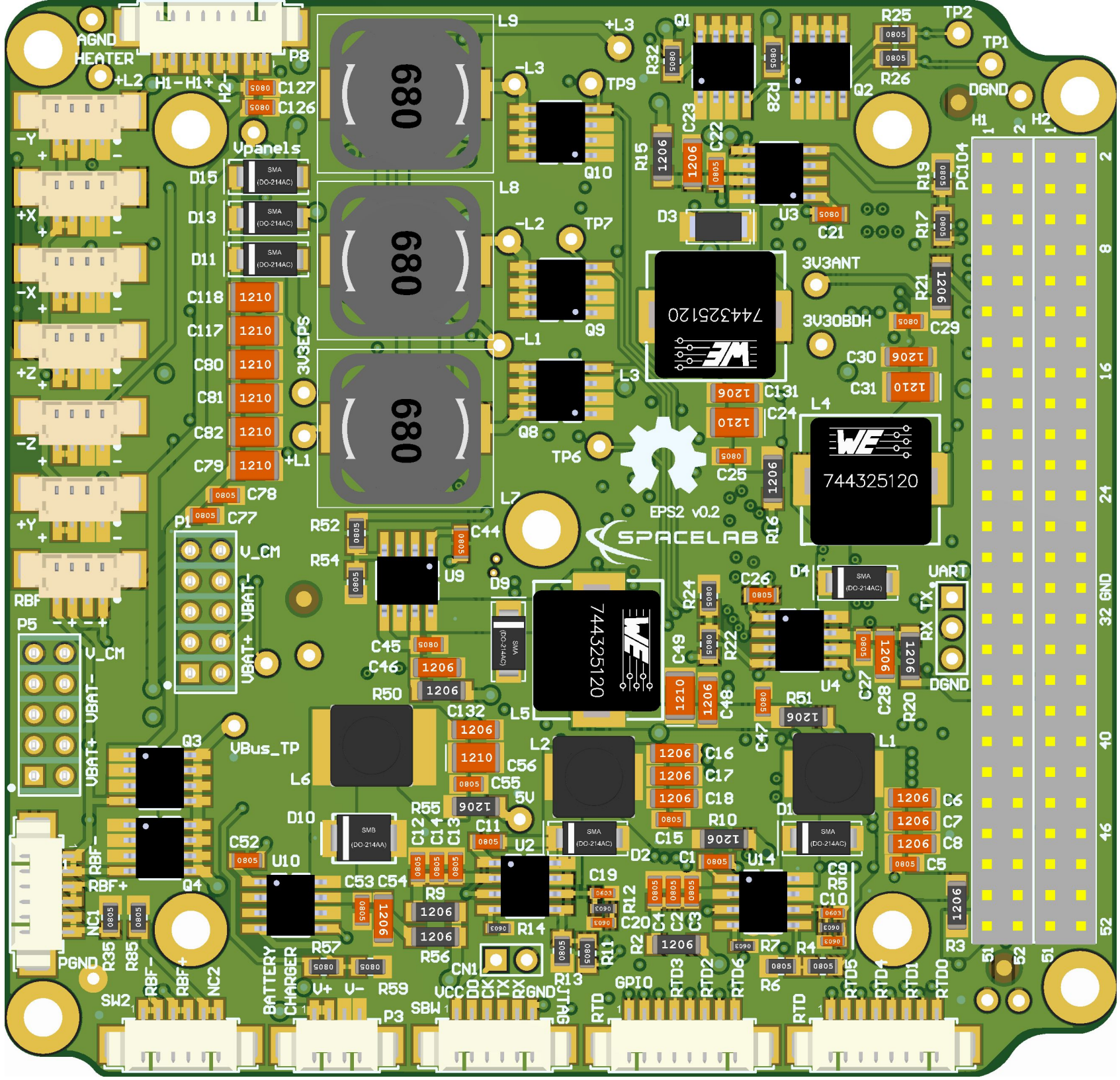
AGND
HEATER
P8
H1-H1+
H2
C127
C126
Vpanels
D15
D13
D11
C118
C117
C80
C81
C82
C79
C78
C77
3V3EPS
+L1
-L1
+L2
-L2
+L3
-L3
L9
L8
L7
L3
L4
L5
L6
L1
L2
Q1
Q2
Q3
Q4
Q8
Q9
Q10
TP1
TP2
TP6
TP7
TP9
DGND
R25
R26
R28
R32
R15
R19
R17
R21
R16
R24
R22
R20
R51
R52
R54
R50
R55
R9
R56
R57
R59
R14
R13
R11
R12
R2
R7
R4
R6
R3
R5
R10
C21
C22
C23
C29
C30
C31
C131
C24
C25
C26
C27
C28
C48
C49
C47
C45
C46
C44
C132
C56
C55
C11
C12
C13
C14
C15
C16
C17
C18
C19
C20
C1
C2
C3
C4
C6
C7
C8
C9
C10
C5
C52
C53
C54
U3
U4
U9
U10
U14
U2
D3
D4
D9
D10
D1
D2
PC104
UART
TX
RX
DGND
3V3ANT
3V3OBDH
744325120
EPS2 v0.2
SPACELAB
-Y
+X
-X
+Z
-Z
+Y
RBF
P5
V_CM
VBAT-
VBAT+
P1
VBus_TP
5V
RBF-
RBF+
NC1
NC2
PGND
SW2
BATTERY CHARGER
V+
V-
P3
SBW
VCC
DO
CK
TX
RX
GND
CN1
JTAG
GPIO
RTD
RTD3
RTD2
RTD6
RTD5
RTD4
RTD1
RTD0
H1
H2
GND

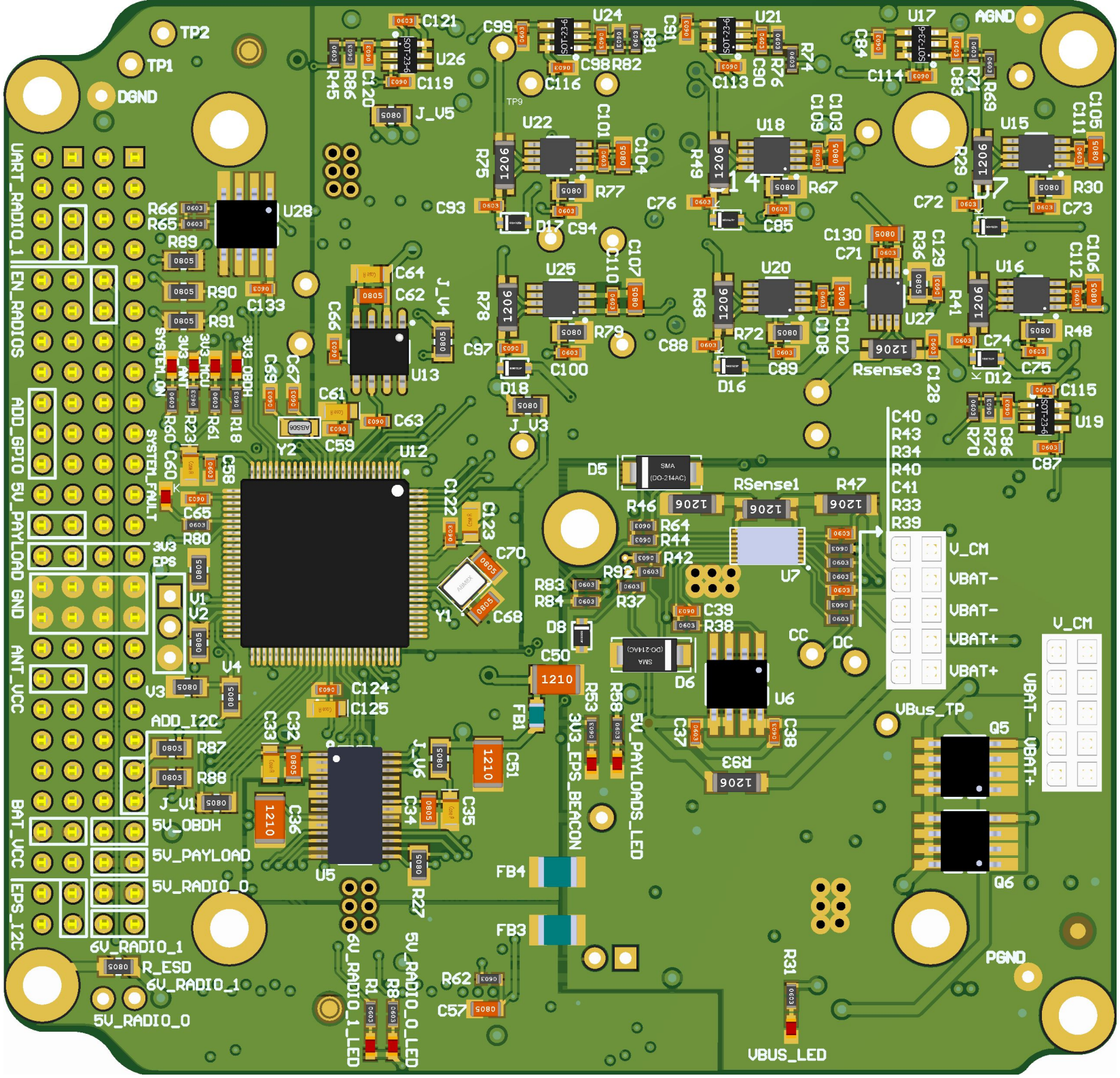
TP2
TP1
DGND
AGND
PGND
UART_RADIO_1
EN_RADIOS
ADD_GPIO
5V_PAYLOAD
GND
ANT_VCC
BAT_VCC
EPS_I2C
SYSTEM_ON
3V3_ANT
3V3_MCU
3V3_OBDH
SYSTEM_FAULT
3V3_EPS
ADD_I2C
5V_OBDH
5V_PAYLOAD
5V_RADIO_0
6V_RADIO_1
R_ESD
6V_RADIO_1
5V_RADIO_0
6V_RADIO_1_LED
5V_RADIO_0_LED
3V3_EPS_BEACON
5V_PAYLOADS_LED
VBUS_LED
VBus_TP
V_CM
VBAT-
VBAT-
VBAT+
VBAT+
V_CM
VBAT-
VBAT+
CC
DC
RSense1
Rsense3
U1
U2
U3
U4
U5
U6
U7
U12
U13
U15
U16
U17
U18
U19
U20
U21
U22
U24
U25
U26
U27
U28
Q5
Q6
Y1
Y2
D5
D6
D8
D12
D16
D17
D18
FB1
FB3
FB4
J_V1
J_V3
J_V4
J_V5
J_V6