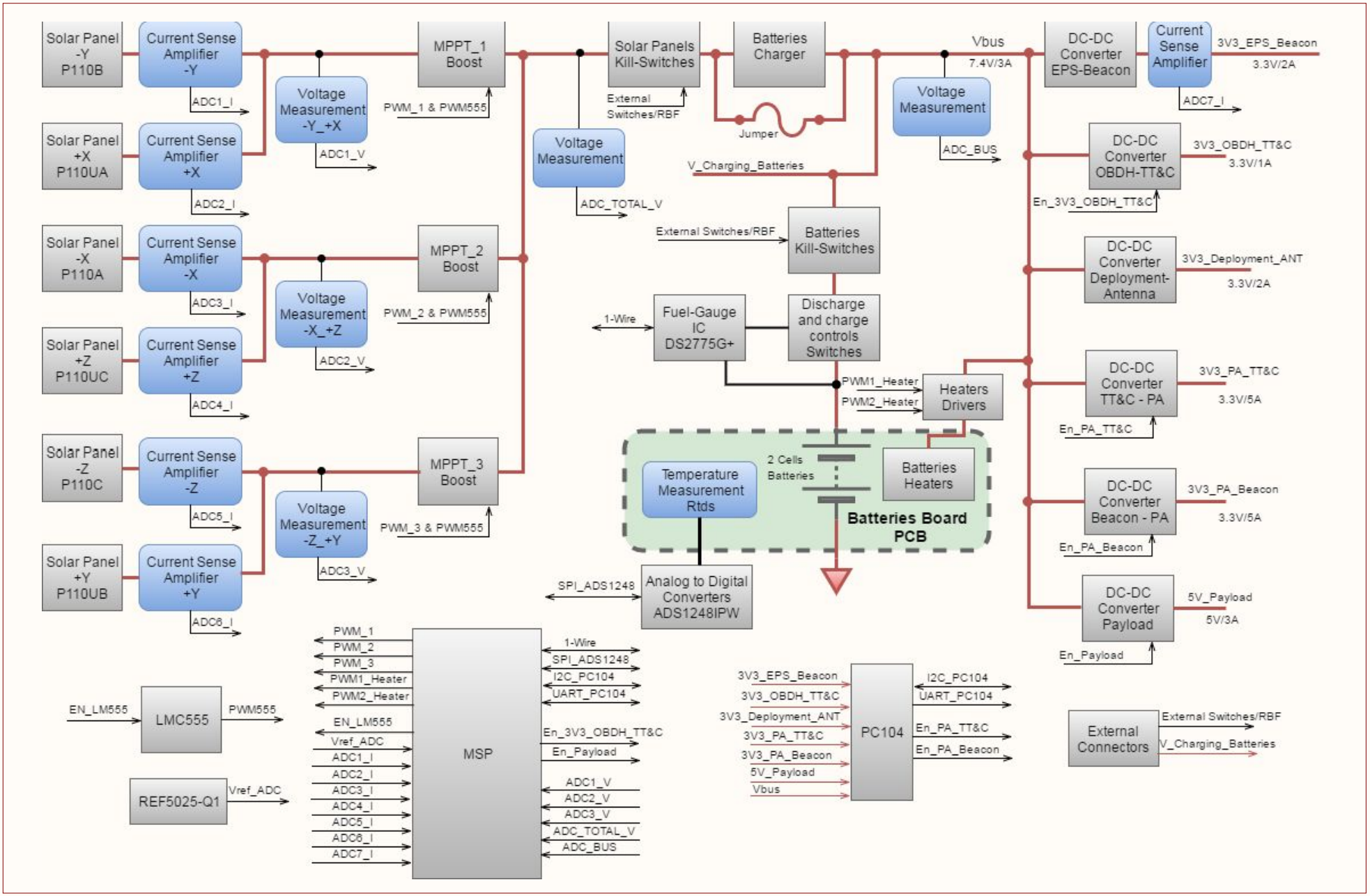

Title **Block diagram**			*UFSC - SpaceLab* *University Campus - Trindade* *Dep. of Electrical Engineering - CTC* *Florianópolis, Santa Catarina, Brazil* *CEP: 88040 - 900*
Size: A3	Project: FloripaSat	Revision: V0.1	
Date: 5/6/2020	Time: 7:01:55 PM	Sheet 1 of 11	
Drawn by: Sara V. Martinez		Model: Flight	

Cannot open file C:\Users\sara\Google Drive\PCB\patch-256.png

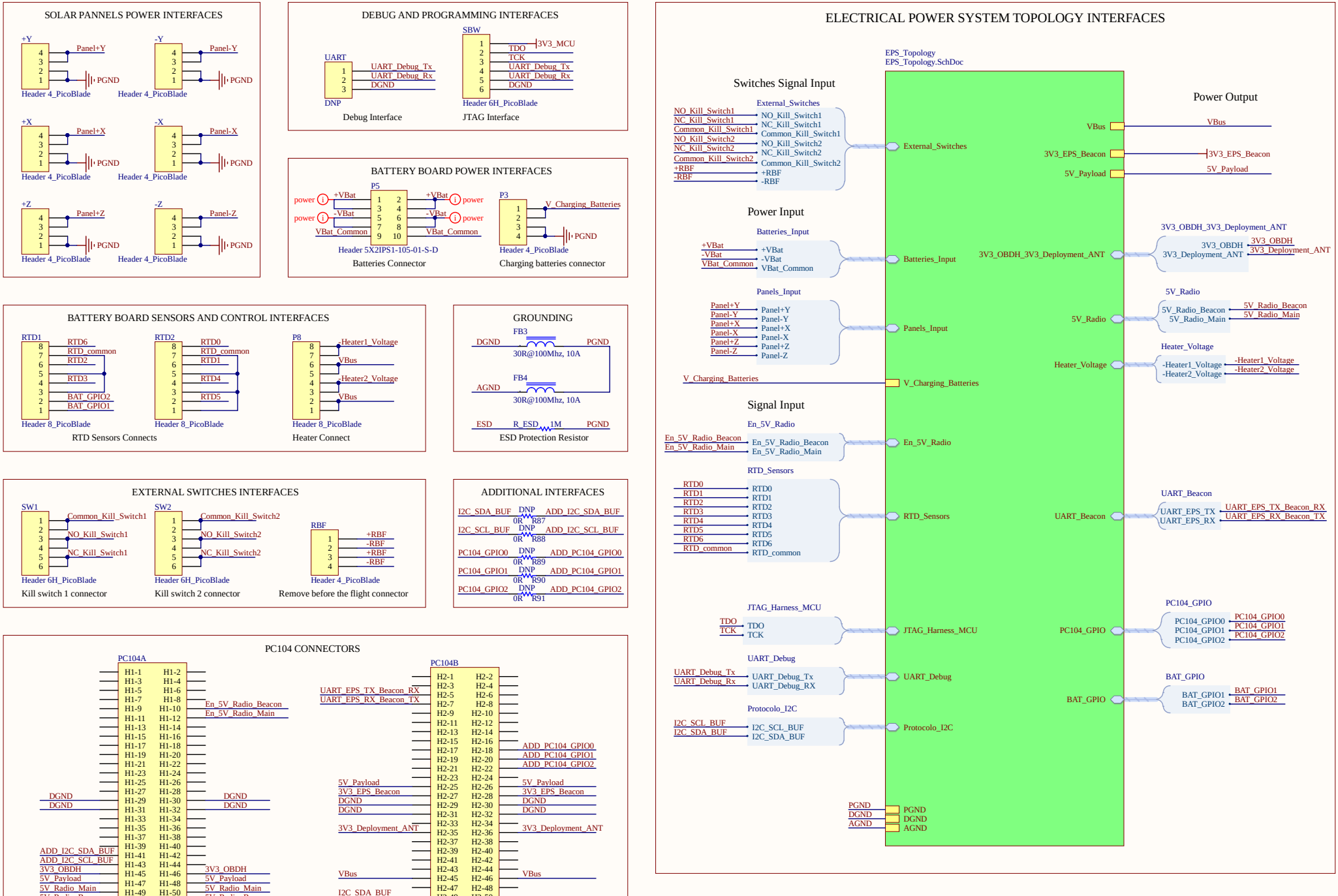
SOLAR PANNELS POWER INTERFACES
+Y
Panel+Y
PGND
Header 4_PicoBlade
-Y
Panel-Y
+X
Panel+X
-X
Panel-X
+Z
Panel+Z
-Z
Panel-Z
DEBUG AND PROGRAMMING INTERFACES
UART
UART_Debug_Tx
UART_Debug_Rx
DGND
DNP
Debug Interface
SBW
TDO
TCK
3V3_MCU
Header 6H_PicoBlade
JTAG Interface
BATTERY BOARD POWER INTERFACES
P5
power
+VBat
-VBat
VBat_Common
Header 5X2IPS1-105-01-S-D
Batteries Connector
P3
V_Charging_Batteries
Header 4_PicoBlade
Charging batteries connector
BATTERY BOARD SENSORS AND CONTROL INTERFACES
RTD1
RTD6
RTD_common
RTD2
RTD3
BAT_GPIO2
BAT_GPIO1
Header 8_PicoBlade
RTD Sensors Connects
RTD2
RTD0
RTD_common
RTD1
RTD4
RTD5
P8
Heater1_Voltage
VBus
Heater2_Voltage
Heater Connect
GROUNDING
FB3
DGND
PGND
30R@100Mhz, 10A
FB4
AGND
ESD
R_ESD
1M
ESD Protection Resistor
EXTERNAL SWITCHES INTERFACES
SW1
Common_Kill_Switch1
NO_Kill_Switch1
NC_Kill_Switch1
Header 6H_PicoBlade
Kill switch 1 connector
SW2
Common_Kill_Switch2
NO_Kill_Switch2
NC_Kill_Switch2
Kill switch 2 connector
RBF
+RBF
-RBF
Header 4_PicoBlade
Remove before the flight connector
ADDITIONAL INTERFACES
I2C_SDA_BUF
ADD_I2C_SDA_BUF
I2C_SCL_BUF
ADD_I2C_SCL_BUF
PC104_GPIO0
ADD_PC104_GPIO0
PC104_GPIO1
ADD_PC104_GPIO1
PC104_GPIO2
ADD_PC104_GPIO2
DNP
0R
R87
R88
R89
R90
R91
PC104 CONNECTORS
PC104A
PC104
En_5V_Radio_Beacon
En_5V_Radio_Main
DGND
ADD_I2C_SDA_BUF
ADD_I2C_SCL_BUF
3V3_OBDH
5V_Payload
5V_Radio_Main
5V_Radio_Beacon
PC104B
UART_EPS_TX_Beacon_RX
UART_EPS_RX_Beacon_TX
ADD_PC104_GPIO0
ADD_PC104_GPIO1
ADD_PC104_GPIO2
5V_Payload
3V3_EPS_Beacon
3V3_Deployment_ANT
VBus
I2C_SDA_BUF
I2C_SCL_BUF
ELECTRICAL POWER SYSTEM TOPOLOGY INTERFACES
EPS_Topology
EPS_Topology.SchDoc
Switches Signal Input
External_Switches
NO_Kill_Switch1
NC_Kill_Switch1
Common_Kill_Switch1
NO_Kill_Switch2
NC_Kill_Switch2
Common_Kill_Switch2
+RBF
-RBF
Power Input
Batteries_Input
+VBat
-VBat
VBat_Common
Panels_Input
Panel+Y
Panel-Y
Panel+X
Panel-X
Panel+Z
Panel-Z
V_Charging_Batteries
Signal Input
En_5V_Radio
En_5V_Radio_Beacon
En_5V_Radio_Main
RTD_Sensors
RTD0
RTD1
RTD2
RTD3
RTD4
RTD5
RTD6
RTD_common
JTAG_Harness_MCU
TDO
TCK
UART_Debug
UART_Debug_Tx
UART_Debug_RX
UART_Debug_Rx
Protocolo_I2C
I2C_SCL_BUF
I2C_SDA_BUF
PGND
DGND
AGND
Power Output
VBus
3V3_EPS_Beacon
5V_Payload
3V3_OBDH_3V3_Deployment_ANT
3V3_OBDH
3V3_Deployment_ANT
5V_Radio
5V_Radio_Beacon
5V_Radio_Main
Heater_Voltage
-Heater1_Voltage
-Heater2_Voltage
UART_Beacon
UART_EPS_TX
UART_EPS_RX
UART_EPS_TX_Beacon_RX
UART_EPS_RX_Beacon_TX
PC104_GPIO
PC104_GPIO0
PC104_GPIO1
PC104_GPIO2
BAT_GPIO
BAT_GPIO1
BAT_GPIO2
Title
EPS Interface
Size: A3
Project: FloripaSat
Revision: V0.1
Date: 5/6/2020
Time: 7:01:56 PM
Sheet2 of 11
Drawn by: Sara V. Martinez
Model: Flight
UFSC - SpaceLab
University Campus - Trindade
Dep. of Electrical Engineering - CTC
Florianópolis, Santa Catarina, Brazil
CEP: 88040 - 900
Cannot open file C:\Users\sara\Google Drive\PCB\patch-256.png

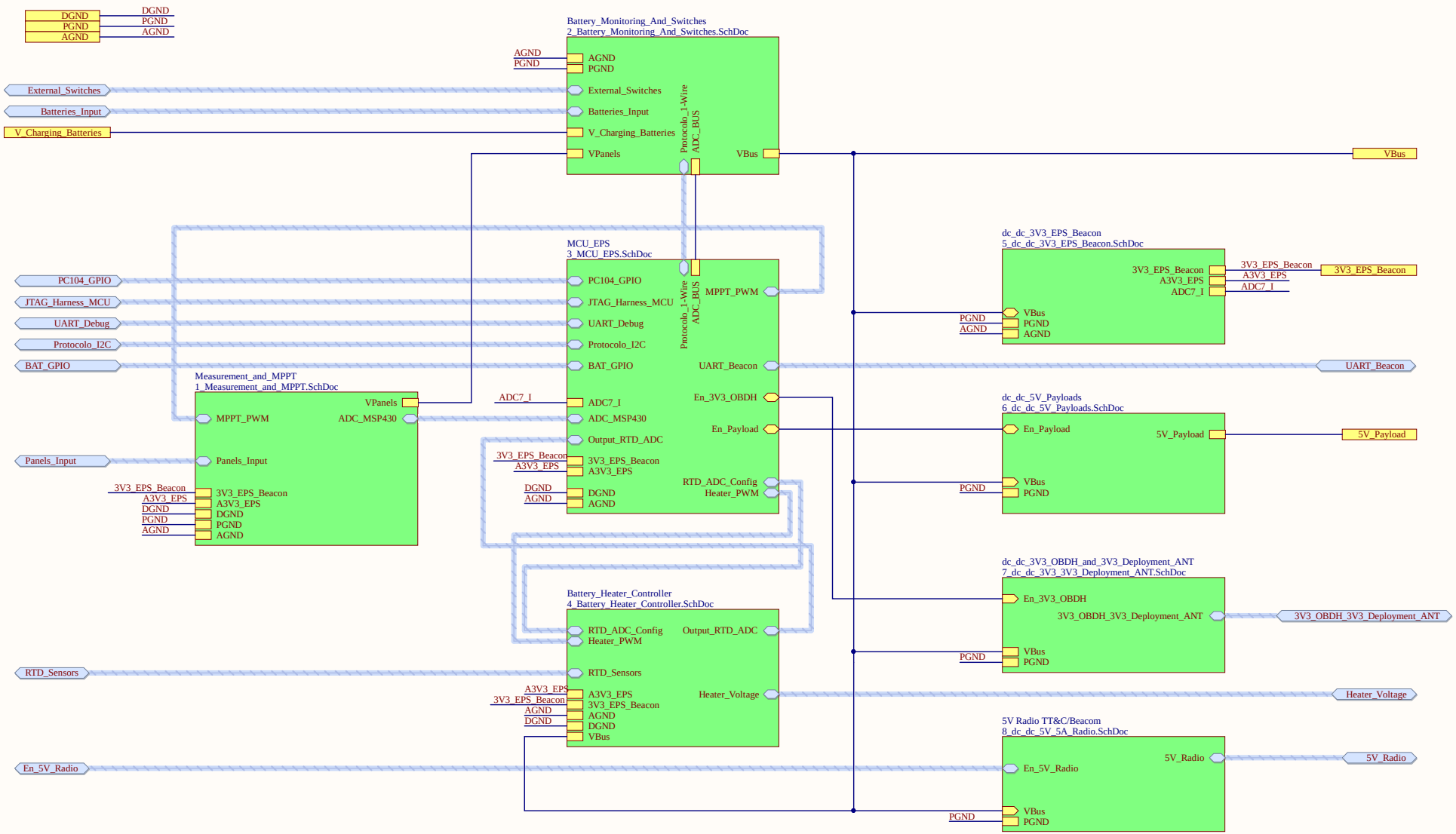

Title **EPS Topology**			*UFSC - SpaceLab*
Size: A3	Project: FloripaSat	Revision: V0.1	*University Campus - Trindade*
Date: 5/6/2020	Time: 7:01:56 PM	Sheet3 of 11	*Dep. of Electrical Engineering - CTC*
Drawn by: Sara V. Martinez		Model: *	*Florianópolis, Santa Catarina, Brazil*
			CEP: 88040 - 900

Cannot open file C:\Users\sara\Google Drive\PCB\patch-256.png

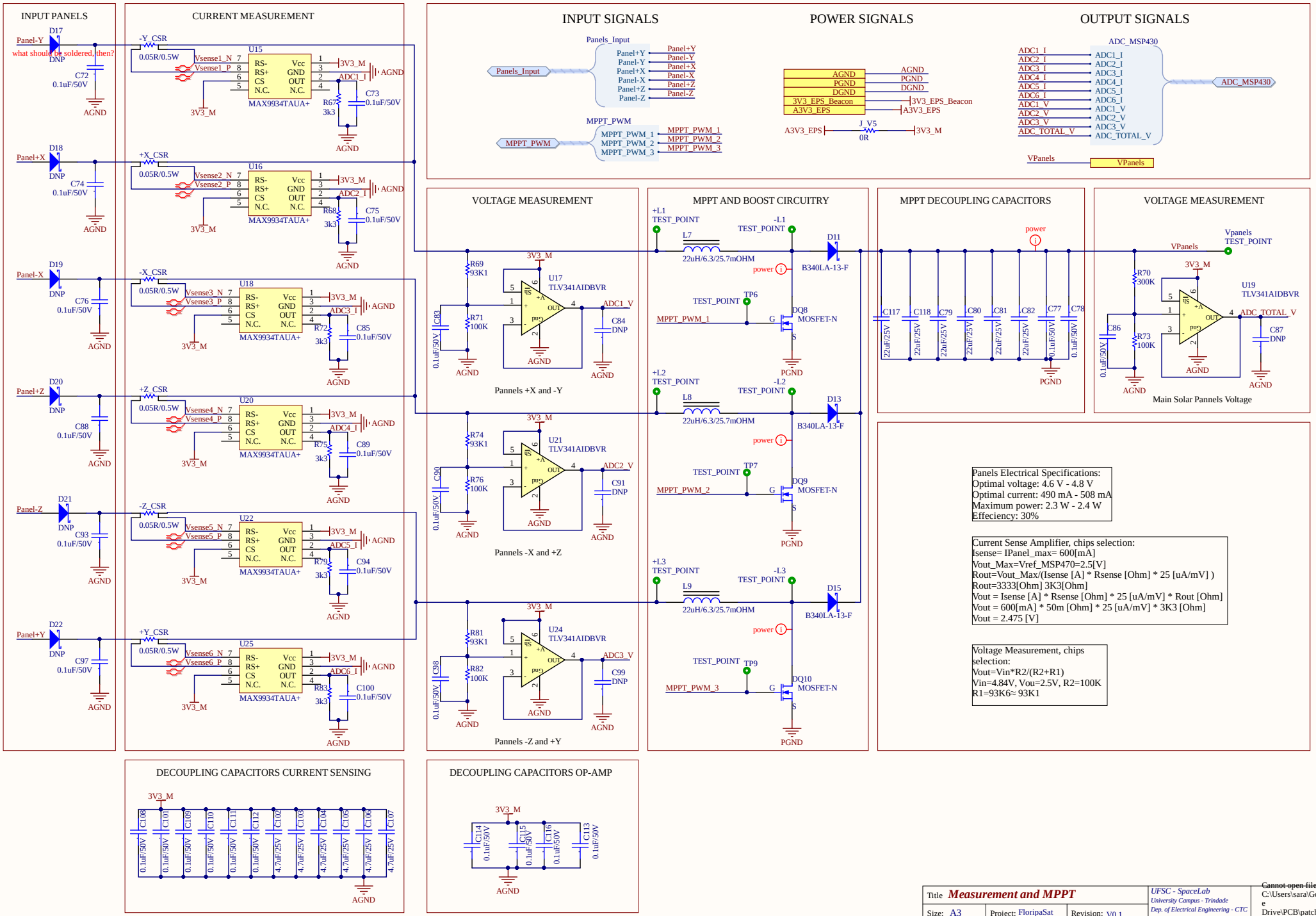
INPUT PANELS
CURRENT MEASUREMENT
INPUT SIGNALS
POWER SIGNALS
OUTPUT SIGNALS
Panels_Input
MPPT_PWM
ADC_MSP430
VPanels
VOLTAGE MEASUREMENT
MPPT AND BOOST CIRCUITRY
MPPT DECOUPLING CAPACITORS
VOLTAGE MEASUREMENT
Pannels +X and -Y
Pannels -X and +Z
Pannels -Z and +Y
Main Solar Pannels Voltage
Panels Electrical Specifications:
Optimal voltage: 4.6 V - 4.8 V
Optimal current: 490 mA - 508 mA
Maximum power: 2.3 W - 2.4 W
Effeciency: 30%
Current Sense Amplifier, chips selection:
Isense= IPanel_max= 600[mA]
Vout_Max=Vref_MSP470=2.5[V]
Rout=Vout_Max/(Isense [A] * Rsense [Ohm] * 25 [uA/mV])
Rout=3333[Ohm] 3K3[Ohm]
Vout = Isense [A] * Rsense [Ohm] * 25 [uA/mV] * Rout [Ohm]
Vout = 600[mA] * 50m [Ohm] * 25 [uA/mV] * 3K3 [Ohm]
Vout = 2.475 [V]
Voltage Measurement, chips selection:
Vout=Vin*R2/(R2+R1)
Vin=4.84V, Vou=2.5V, R2=100K
R1=93K6≈ 93K1
DECOUPLING CAPACITORS CURRENT SENSING
DECOUPLING CAPACITORS OP-AMP
Title Measurement and MPPT
Size: A3
Project: FloripaSat
Revision: V0.1
Date: 5/6/2020
Time: 7:01:56 PM
Sheet 4 of 11
Drawn by: Sara V. Martinez
Model: Flight
UFSC - SpaceLab
University Campus - Trindade
Dep. of Electrical Engineering - CTC
Florianópolis, Santa Catarina, Brazil
CEP: 88040 - 900
Cannot open file C:\Users\sara\Google Drive\PCB\patch-256.png

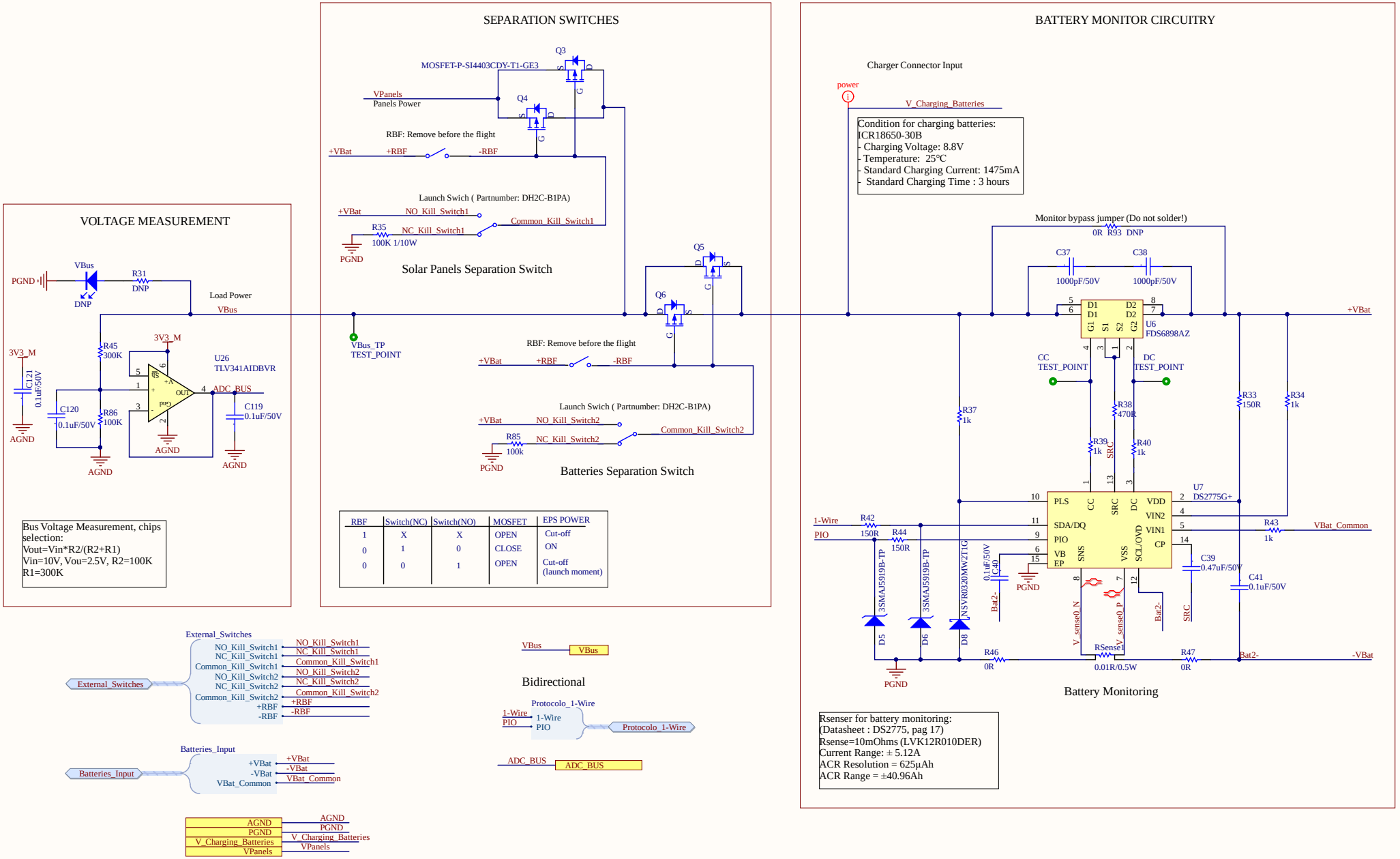

RBF	Switch(NC)	Switch(NO)	MOSFET	EPS POWER
1	X	X	OPEN	Cut-off
0	1	0	CLOSE	ON
0	0	1	OPEN	Cut-off (launch moment)

Title	Batteries Monitor and Power Switches	UFSC - SpaceLab University Campus - Trindade Dep. of Electrical Engineering - CTC Florianópolis, Santa Catarina, Brazil CEP: 88040 - 900	Cannot open file C:\Users\sara\Google Drive\PCB\patch-256.png
Size: A3	Project: FloripaSat	Revision: V0.1	
Date: 5/6/2020	Time: 7:01:57 PM	Sheet 5 of 11	
Drawn by: Sara V. Martinez		Model: Flight	

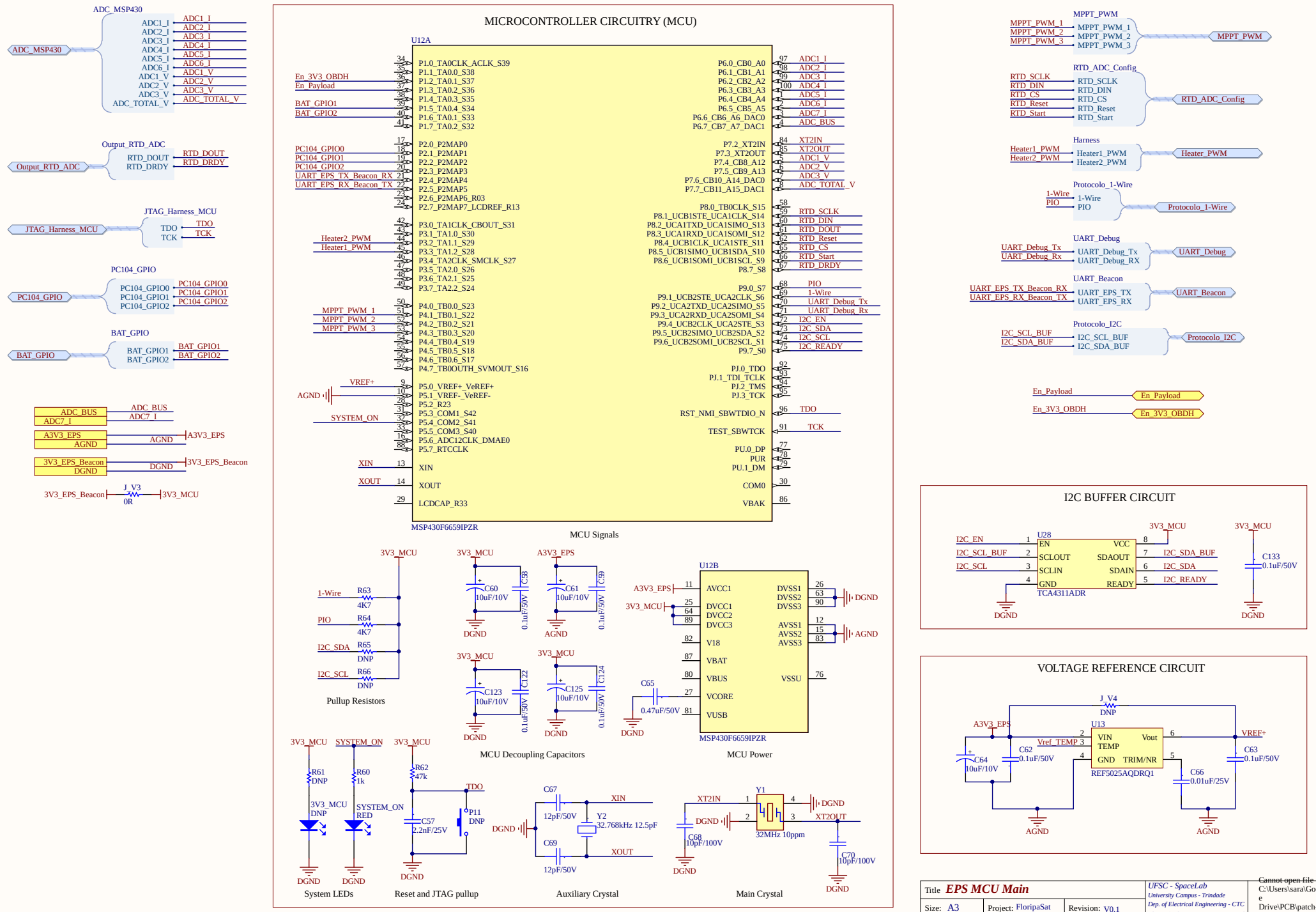
ADC_MSP430
ADC1_I
ADC2_I
ADC3_I
ADC4_I
ADC5_I
ADC6_I
ADC1_V
ADC2_V
ADC3_V
ADC_TOTAL_V
Output_RTD_ADC
RTD_DOUT
RTD_DRDY
JTAG_Harness_MCU
TDO
TCK
PC104_GPIO
PC104_GPIO0
PC104_GPIO1
PC104_GPIO2
BAT_GPIO
BAT_GPIO1
BAT_GPIO2
ADC_BUS
ADC7_I
A3V3_EPS
AGND
3V3_EPS_Beacon
DGND
J_V3
0R
3V3_MCU
MICROCONTROLLER CIRCUITRY (MCU)
U12A
En_3V3_OBDH
En_Payload
BAT_GPIO1
BAT_GPIO2
PC104_GPIO0
PC104_GPIO1
PC104_GPIO2
UART_EPS_TX_Beacon_RX
UART_EPS_RX_Beacon_TX
Heater2_PWM
Heater1_PWM
MPPT_PWM_1
MPPT_PWM_2
MPPT_PWM_3
VREF+
SYSTEM_ON
XIN
XOUT
P1.0_TA0CLK_ACLK_S39
P1.1_TA0.0_S38
P1.2_TA0.1_S37
P1.3_TA0.2_S36
P1.4_TA0.3_S35
P1.5_TA0.4_S34
P1.6_TA0.1_S33
P1.7_TA0.2_S32
P2.0_P2MAP0
P2.1_P2MAP1
P2.2_P2MAP2
P2.3_P2MAP3
P2.4_P2MAP4
P2.5_P2MAP5
P2.6_P2MAP6_R03
P2.7_P2MAP7_LCDREF_R13
P3.0_TA1CLK_CBOUT_S31
P3.1_TA1.0_S30
P3.2_TA1.1_S29
P3.3_TA1.2_S28
P3.4_TA2CLK_SMCLK_S27
P3.5_TA2.0_S26
P3.6_TA2.1_S25
P3.7_TA2.2_S24
P4.0_TB0.0_S23
P4.1_TB0.1_S22
P4.2_TB0.2_S21
P4.3_TB0.3_S20
P4.4_TB0.4_S19
P4.5_TB0.5_S18
P4.6_TB0.6_S17
P4.7_TB0OUTH_SVMOUT_S16
P5.0_VREF+_VeREF+
P5.1_VREF-_VeREF-
P5.2_R23
P5.3_COM1_S42
P5.4_COM2_S41
P5.5_COM3_S40
P5.6_ADC12CLK_DMAE0
P5.7_RTCCLK
LCDCAP_R33
P6.0_CB0_A0
P6.1_CB1_A1
P6.2_CB2_A2
P6.3_CB3_A3
P6.4_CB4_A4
P6.5_CB5_A5
P6.6_CB6_A6_DAC0
P6.7_CB7_A7_DAC1
P7.2_XT2IN
P7.3_XT2OUT
P7.4_CB8_A12
P7.5_CB9_A13
P7.6_CB10_A14_DAC0
P7.7_CB11_A15_DAC1
P8.0_TB0CLK_S15
P8.1_UCB1STE_UCA1CLK_S14
P8.2_UCA1TXD_UCA1SIMO_S13
P8.3_UCA1RXD_UCA1SOMI_S12
P8.4_UCB1CLK_UCA1STE_S11
P8.5_UCB1SIMO_UCB1SDA_S10
P8.6_UCB1SOMI_UCB1SCL_S9
P8.7_S8
P9.0_S7
P9.1_UCB2STE_UCA2CLK_S6
P9.2_UCA2TXD_UCA2SIMO_S5
P9.3_UCA2RXD_UCA2SOMI_S4
P9.4_UCB2CLK_UCA2STE_S3
P9.5_UCB2SIMO_UCB2SDA_S2
P9.6_UCB2SOMI_UCB2SCL_S1
P9.7_S0
PJ.0_TDO
PJ.1_TDI_TCLK
PJ.2_TMS
PJ.3_TCK
RST_NMI_SBWTDIO_N
TEST_SBWTCK
PU.0_DP
PUR
PU.1_DM
COM0
VBAK
MSP430F6659IPZR
MCU Signals
Pullup Resistors
MCU Decoupling Capacitors
U12B
AVCC1
DVCC1
DVCC2
DVCC3
V18
VBAT
VBUS
VCORE
VUSB
DVSS1
DVSS2
DVSS3
AVSS1
AVSS2
AVSS3
VSSU
MSP430F6659IPZR
MCU Power
System LEDs
Reset and JTAG pullup
Auxiliary Crystal
Main Crystal
MPPT_PWM
RTD_ADC_Config
RTD_SCLK
RTD_DIN
RTD_CS
RTD_Reset
RTD_Start
Harness
Heater1_PWM
Heater2_PWM
Protocolo_1-Wire
1-Wire
PIO
UART_Debug
UART_Debug_Tx
UART_Debug_Rx
UART_Beacon
UART_EPS_TX
UART_EPS_RX
Protocolo_I2C
I2C_SCL_BUF
I2C_SDA_BUF
I2C BUFFER CIRCUIT
U28
EN
SCLOUT
SCLIN
GND
VCC
SDAOUT
SDAIN
READY
TCA4311ADR
I2C_EN
I2C_SCL_BUF
I2C_SCL
I2C_SDA_BUF
I2C_SDA
I2C_READY
C133
0.1uF/50V
VOLTAGE REFERENCE CIRCUIT
U13
VIN
TEMP
GND
Vout
TRIM/NR
REF5025AQDRQ1
Vref_TEMP
J_V4
DNP
C62
0.1uF/50V
C63
0.1uF/50V
C64
10uF/10V
C66
0.01uF/25V
Title EPS MCU Main
Size: A3
Project: FloripaSat
Revision: V0.1
Date: 5/6/2020
Time: 7:01:57 PM
Sheet 6 of 11
Drawn by: Sara V. Martinez
Model: Flight
UFSC - SpaceLab
University Campus - Trindade
Dep. of Electrical Engineering - CTC
Florianópolis, Santa Catarina, Brazil
CEP: 88040 - 900
Cannot open file C:\Users\sara\Google Drive\PCB\patch-256.png

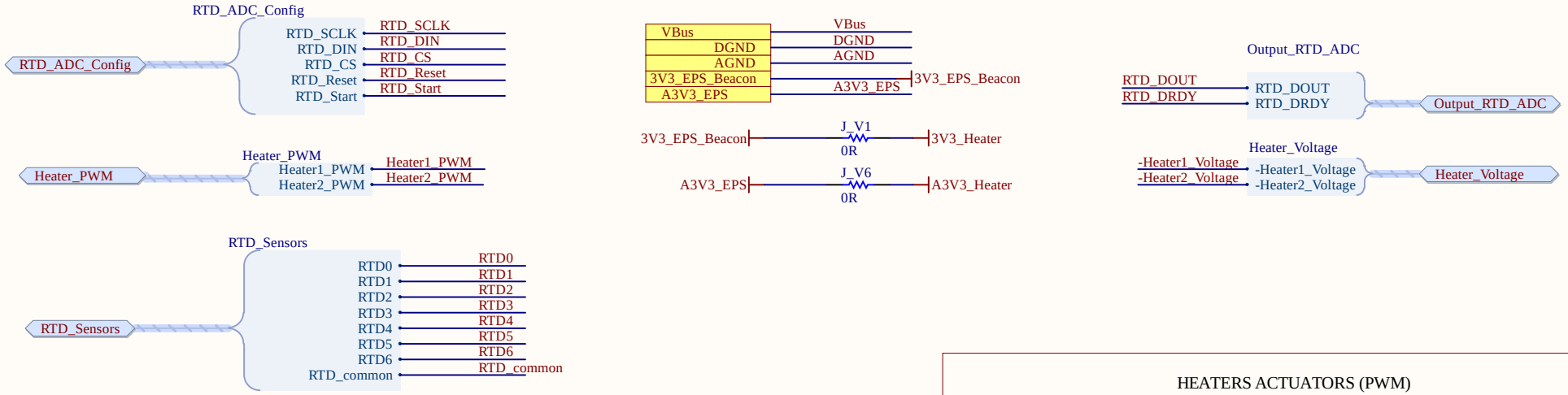

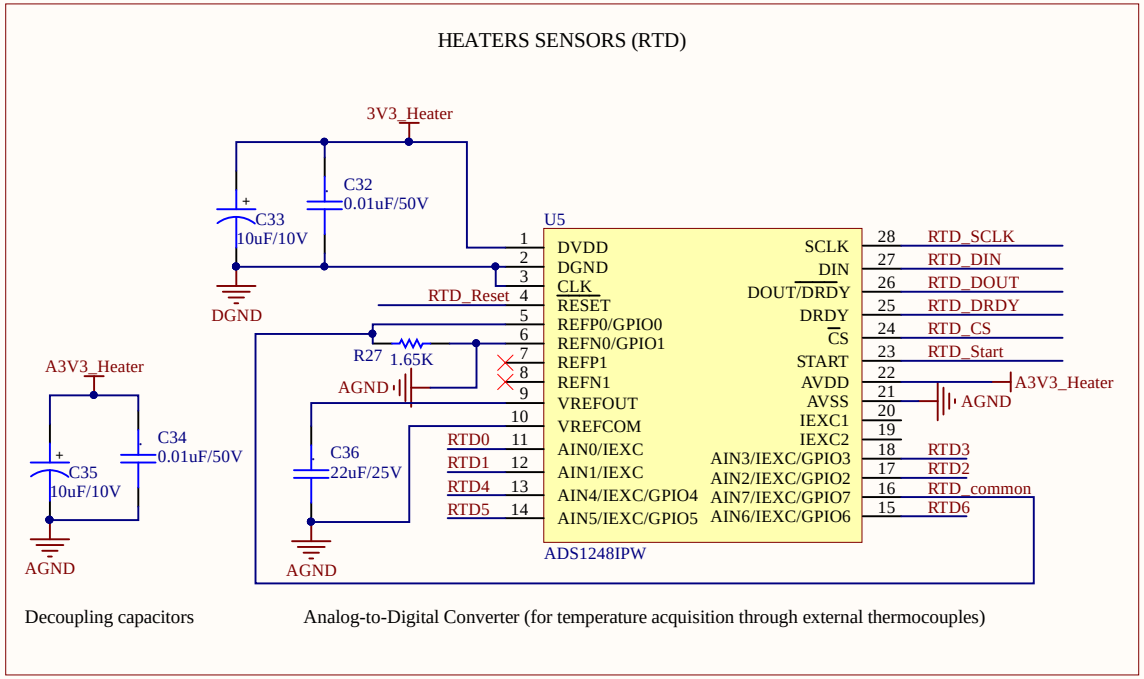

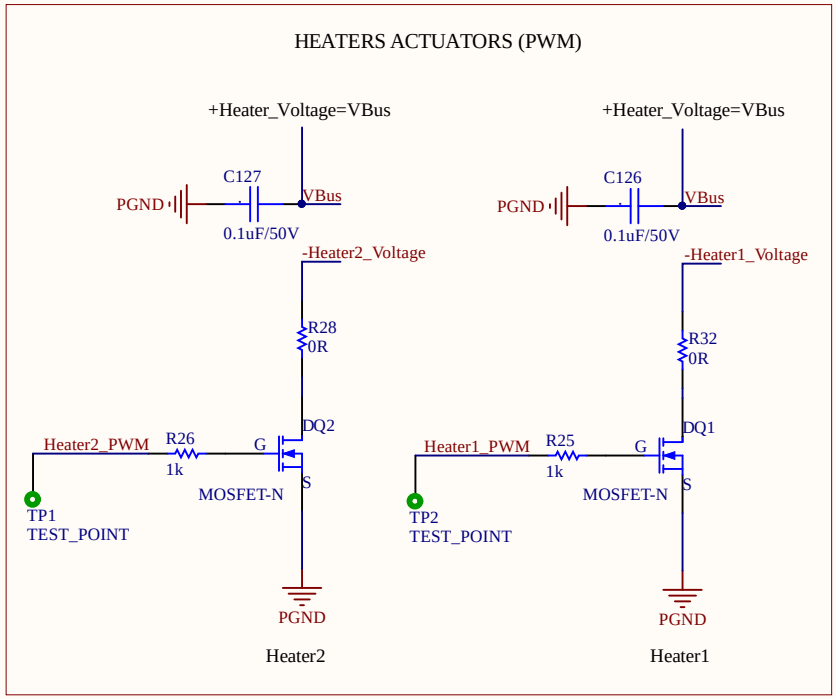

Title	**Batteries Heater Controller**		UFSC - SpaceLab University Campus - Trindade Dep. of Electrical Engineering - CTC Florianópolis, Santa Catarina, Brazil CEP: 88040 - 900
Size: A4	Project: FloripaSat	Revision: V0.1	
Date: 5/6/2020	Time: 7:01:57 PM	Sheet 7 of 11	
Drawn By: Sara V. Martínez		Model: Flight	

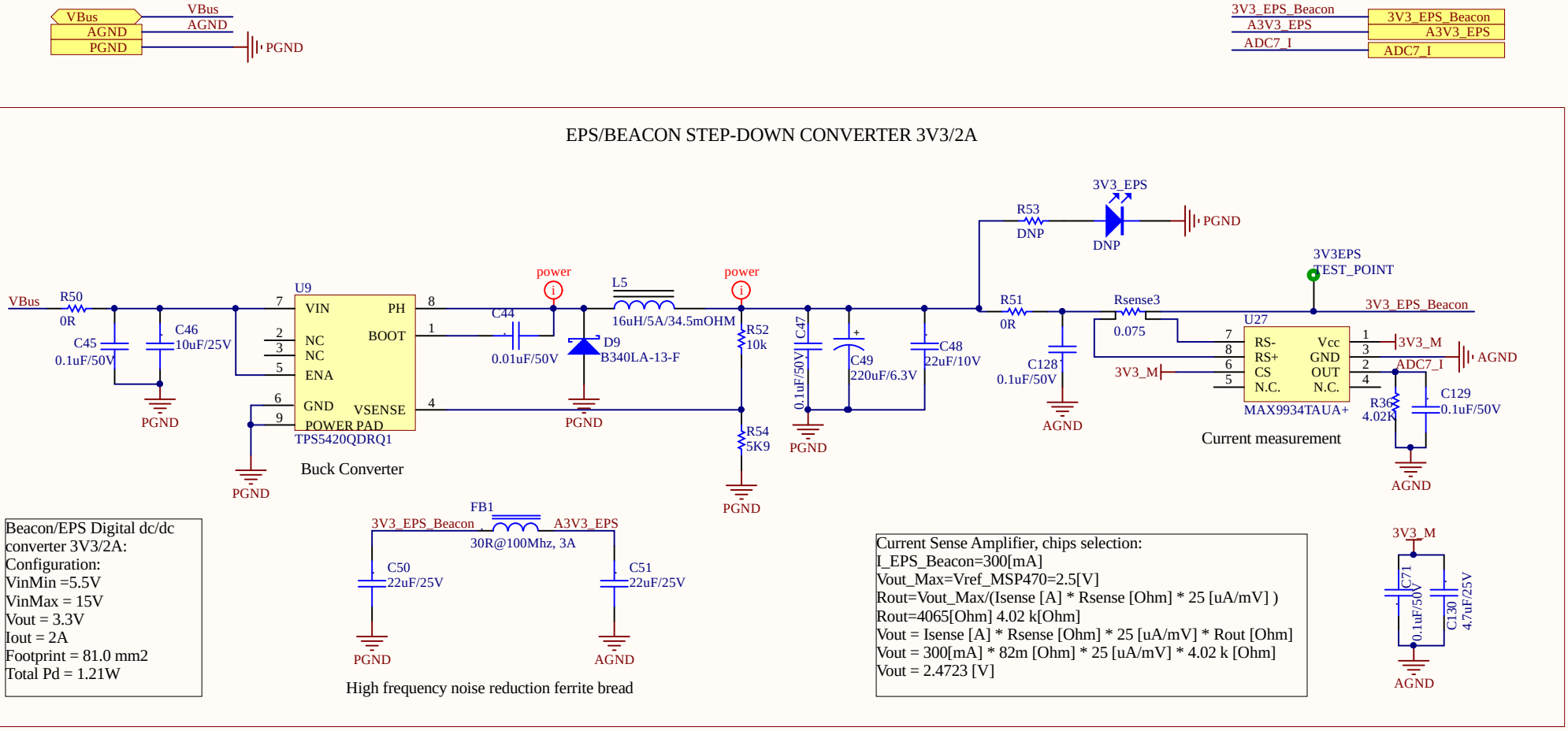

Title	*EPS/BCM Step-Down Converter*		*UFSC - SpaceLab*
Size: A4	Project: FloripaSat	Revision: V0.1	*University Campus - Trindade*
Date: 5/6/2020	Time: 7:01:57 PM	Sheet 8 of 11	*Dep. of Electrical Engineering - CTC*
Drawn By: Sara V. Martínez		Model: Flight	*Florianópolis, Santa Catarina, Brazil*
			CEP: 88040 - 900

Input

VBus → VBus
PGND → PGND
En_Payload → En_Payload

Output

5V_Payload → 5V_Payload

PAYLOAD STEP-DOWN CONVERTER 5V/3A

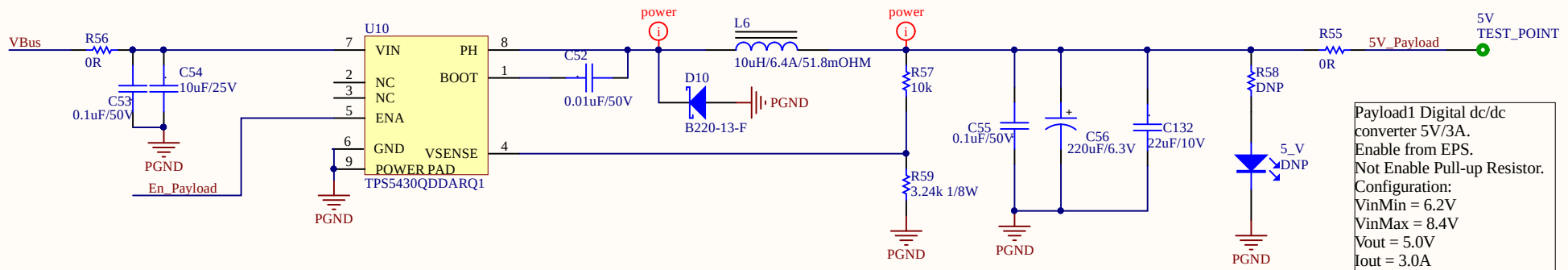

Payload1 Digital dc/dc converter 5V/3A.
Enable from EPS.
Not Enable Pull-up Resistor.
Configuration:
VinMin = 6.2V
VinMax = 8.4V
Vout = 5.0V
Iout = 3.0A
Total Pd = 1.83W

Title	***Payloads Step-Down Converters 5V/3A***		*UFSC - SpaceLab*
Size: A4	Project: FloripaSat	Revision: V0.1	*University Campus - Trindade*
Date: 5/6/2020	Time: 7:01:57 PM	Sheet 9 of 11	*Dep. of Electrical Engineering - CTC*
Drawn By: Sara V. Martínez		Model: Flight	*Florianópolis, Santa Catarina, Brazil*
			CEP: 88040 - 900

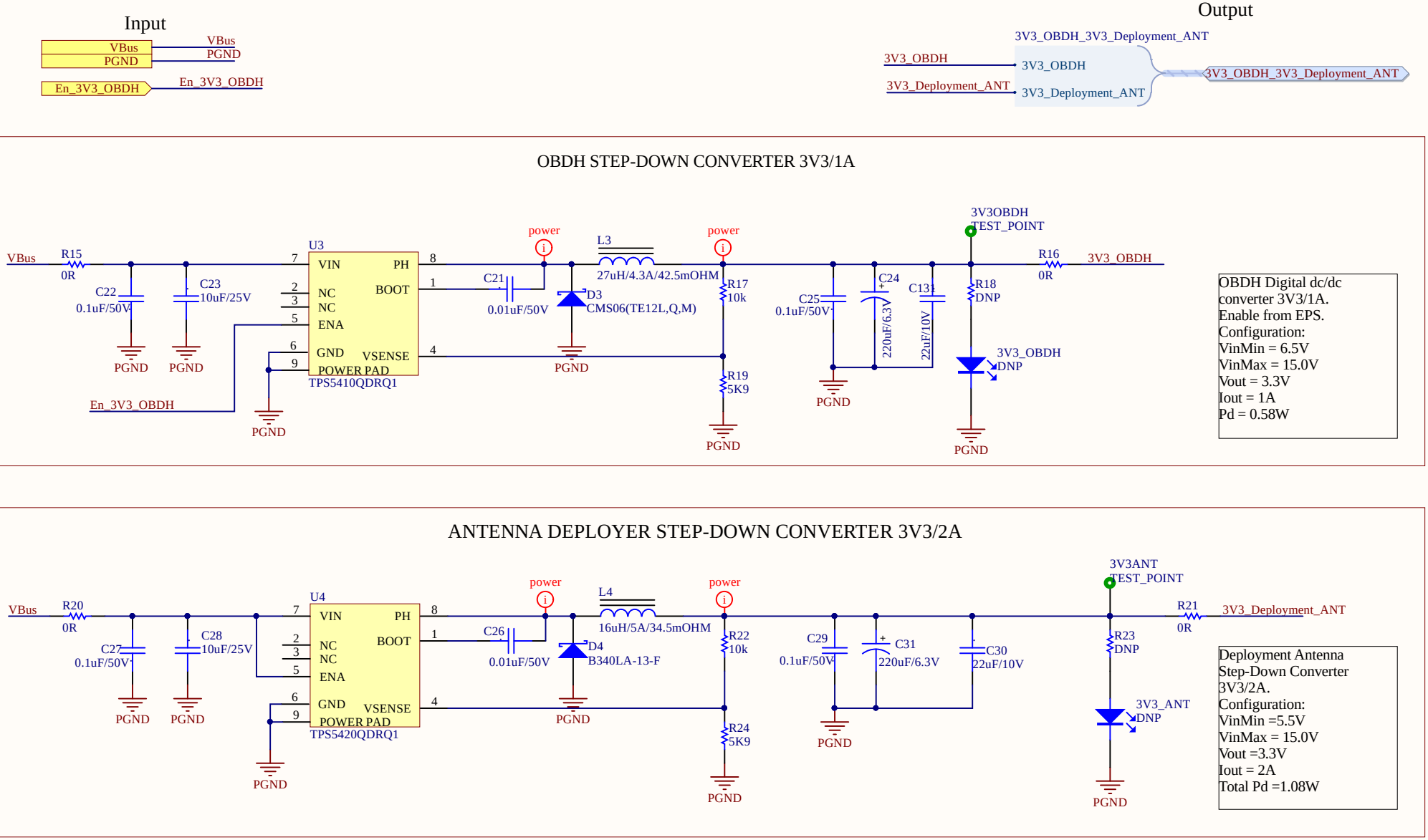

Title	*OBDH Step-Down 3V3/1A/2A*		*UFSC - SpaceLab*
Size: A4	Project: FloripaSat	Revision: V0.1	*University Campus - Trindade*
Date: 5/6/2020	Time: 7:01:58 PM	Sheet 10 of 11	*Dep. of Electrical Engineering - CTC*
Drawn By: Sara V. Martínez		Model: Flight	*Florianópolis, Santa Catarina, Brazil*
			CEP: 88040 - 900

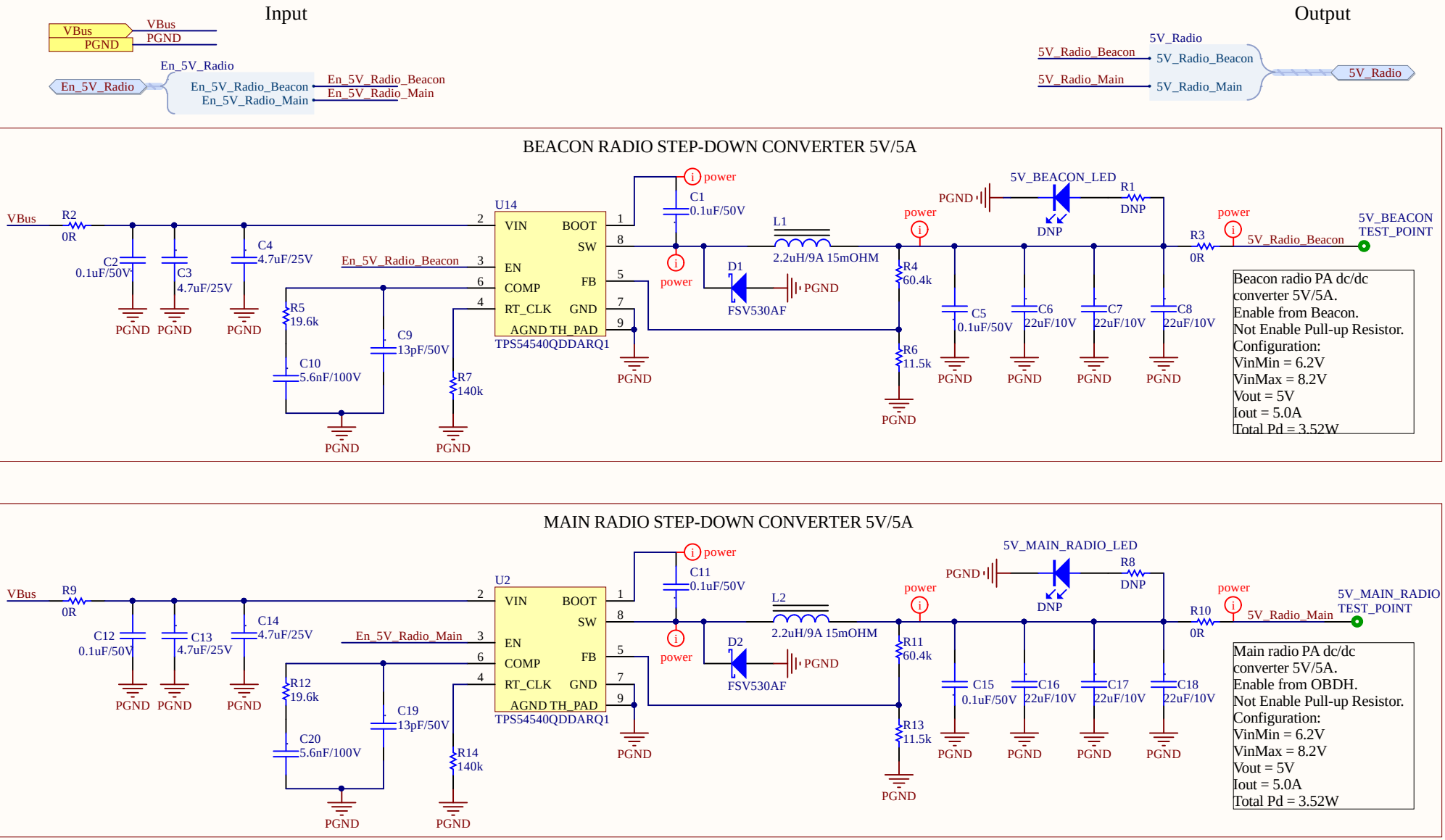

Title	**Radios Step-Down Converters 5V/3A**		UFSC - SpaceLab University Campus - Trindade Dep. of Electrical Engineering - CTC Florianópolis, Santa Catarina, Brazil CEP: 88040 - 900
Size: A4	Project: FloripaSat	Revision: V0.1	
Date: 5/6/2020	Time: 7:01:58 PM	Sheet 11 of 11	
Drawn By: Sara V. Martínez		Model: Flight	

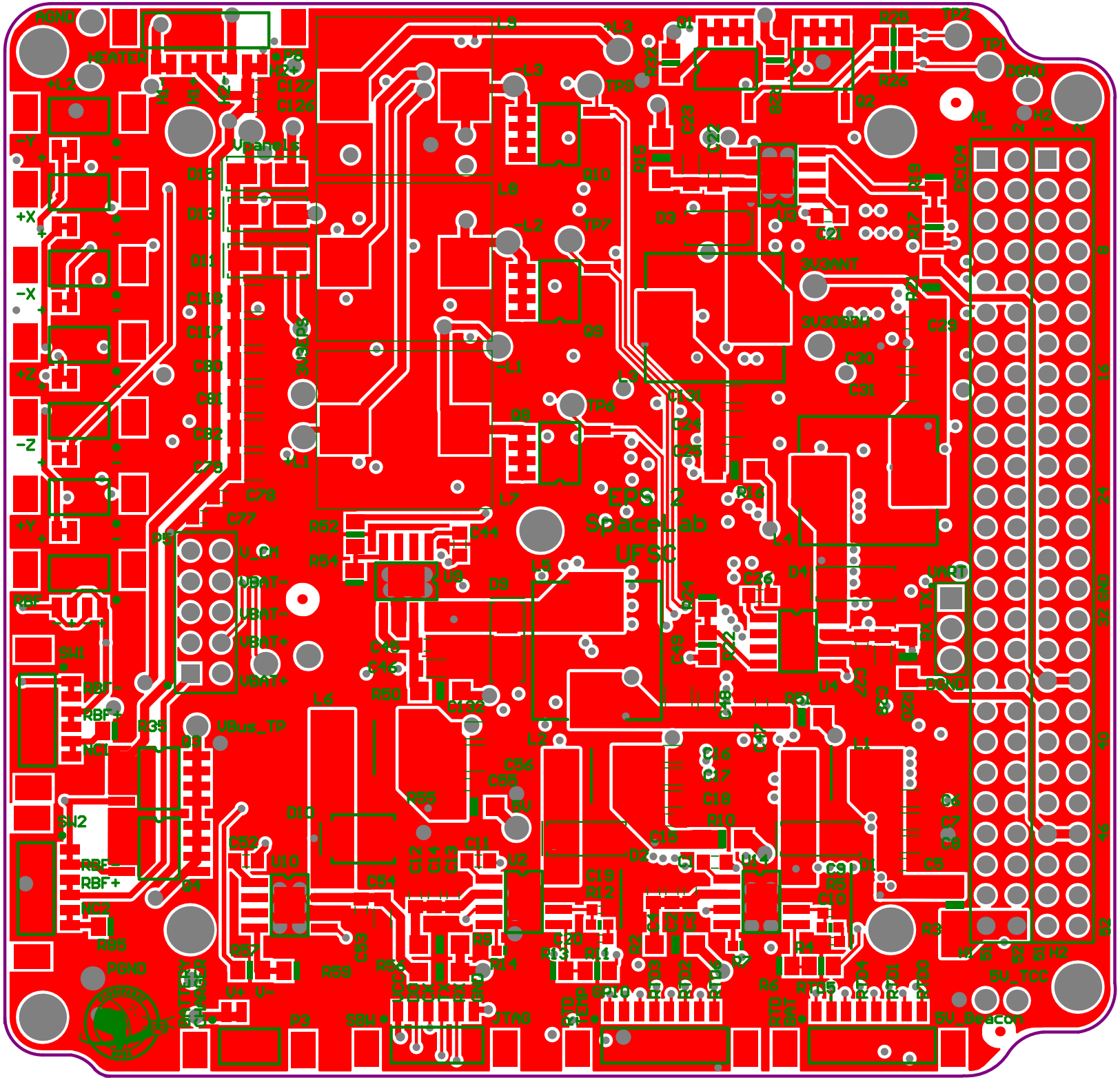
EPS 2
SpaceLab
UFSC
AGND
HEATER
Vpanels
VBAT-
VBAT+
VBus_TP
RBF-
RBF+
PGND
DGND
3V3ANT
3V3OBDH
5V_TCC
5V_Beacon
UART
JTAG
SBW

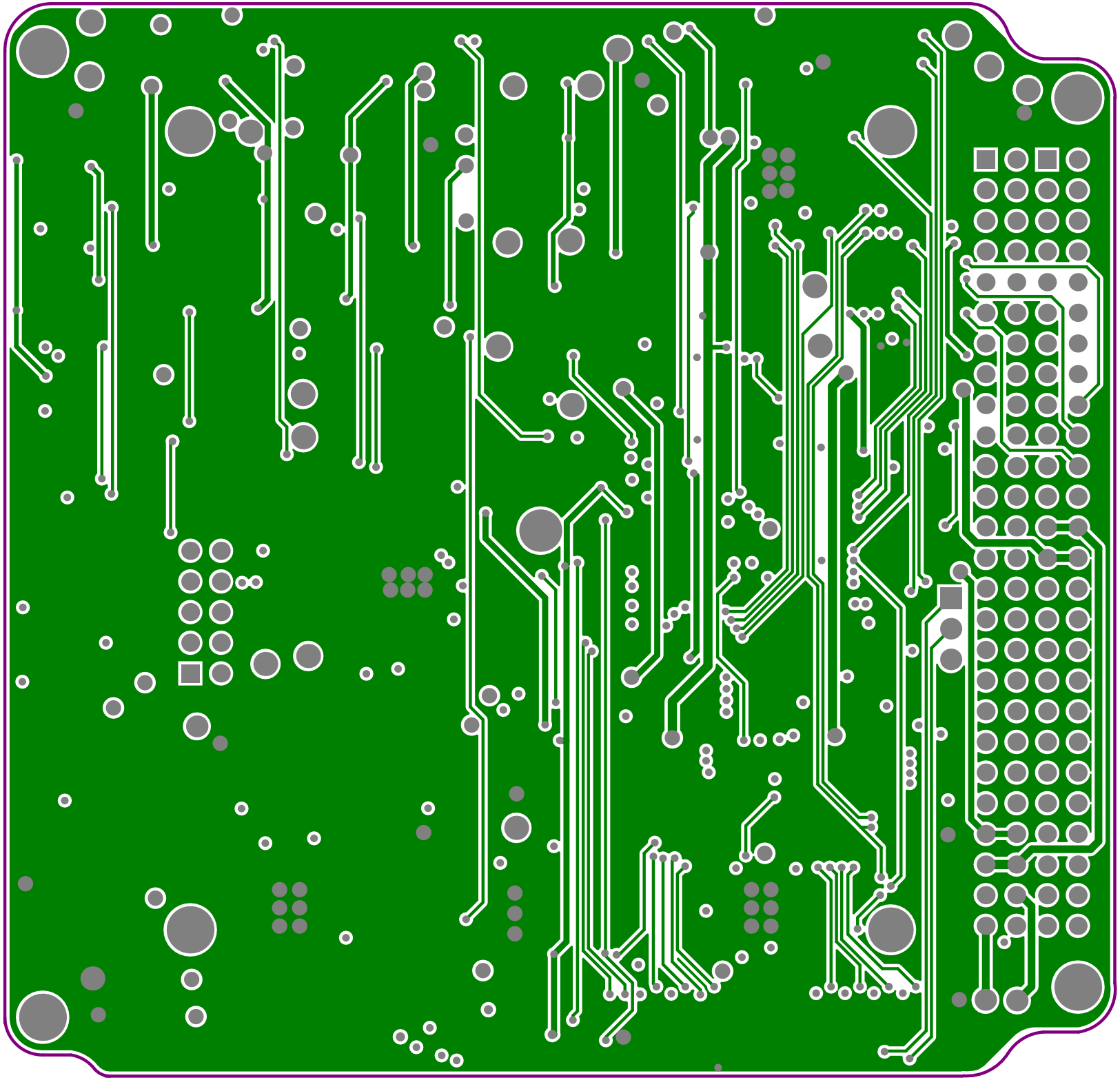

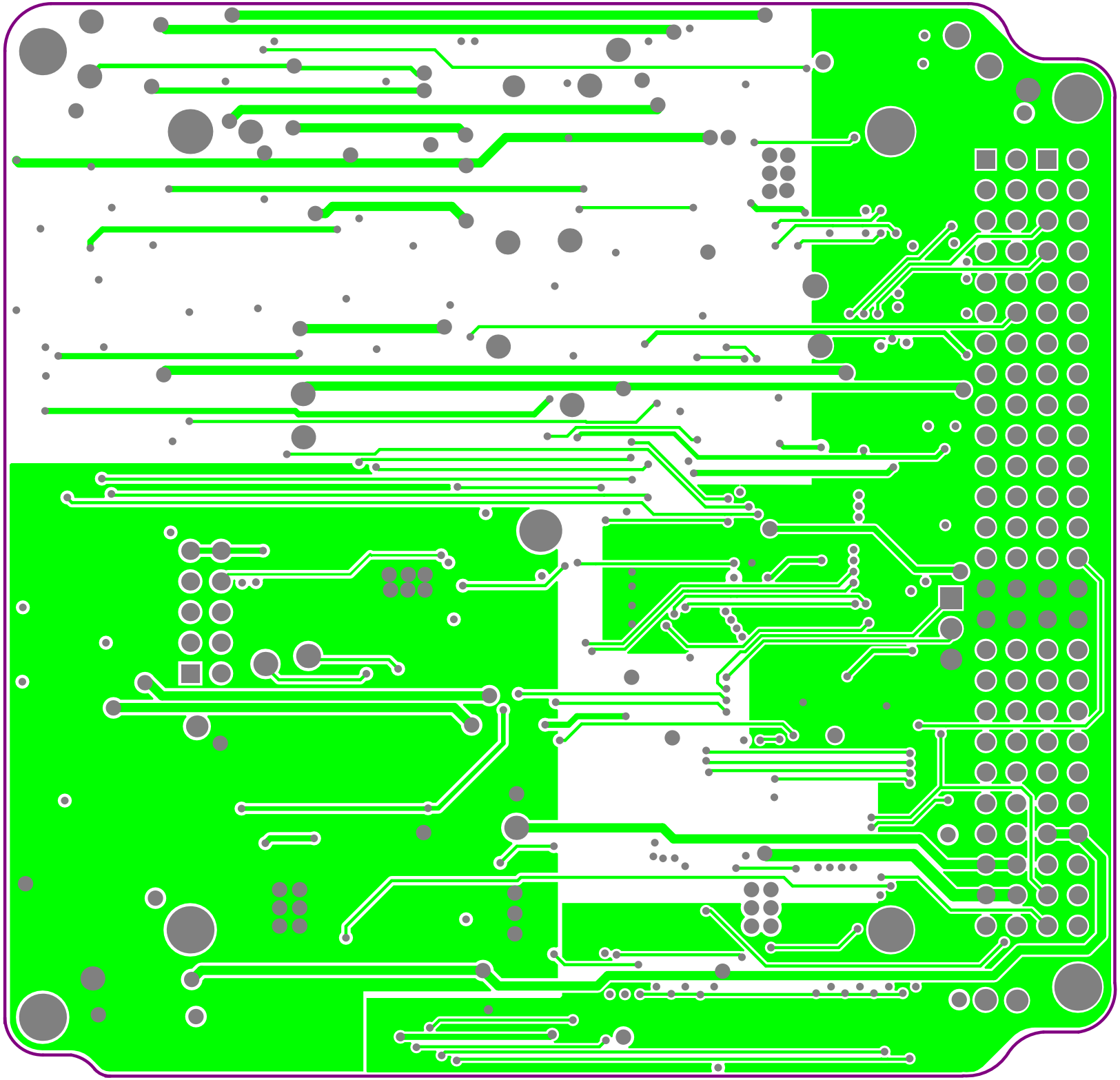

EPS 2
Spacelab
UPSC
5V_BEACON_RADIO
5V_TTC
5V_PAYLOAD
5V_MAIN_RADIO
5V_DOBDH
3V3_EPS
VBUS
VBAT+
VBAT-
V_CM
PGND
AGND
DGND
UART
DEBUG
ADD_I2C
RX
TX
EN_RADIO
SDIO_RADIO
BEACON_UART
ADD_GPIO
5V_PAYLOAD
GND
ANT_VCC
BAT_VCC
I2C_EPS

FD3
FD2
FD4
P8
L9
L8
L7
Q10
Q9
Q8
Q1
Q2
R32
R28
R25
R26
R15
C23
C22
U3
C21
D3
R19
R17
R21
C29
C30
C31
L3
C131
C24
C25
R16
L4
U5
D15
D13
D11
C118
C117
C80
C81
C82
C79
C78
C77
-Y
+X
-X
+Z
-Z
+Y
RBF
R52
R54
U9
C44
D9
L5
R24
R22
C26
U4
D4
C27
C28
R20
UART
C45
C46
R50
C49
C48
C47
R51
SW1
SW2
R35
Q3
Q4
L6
C132
C56
C55
R55
L2
C16
C17
C18
C15
R10
D2
L1
C6
C7
C8
C5
D1
D10
C52
U10
C53
C54
C12
C14
C13
U2
C11
C1
C4
C2
C3
U14
C19
R12
C20
R5
C10
R3
R85
R9
R56
R14
R13
R11
R2
R7
R6
R4
R57
R59
P3
SBW
RTD1
RTD2

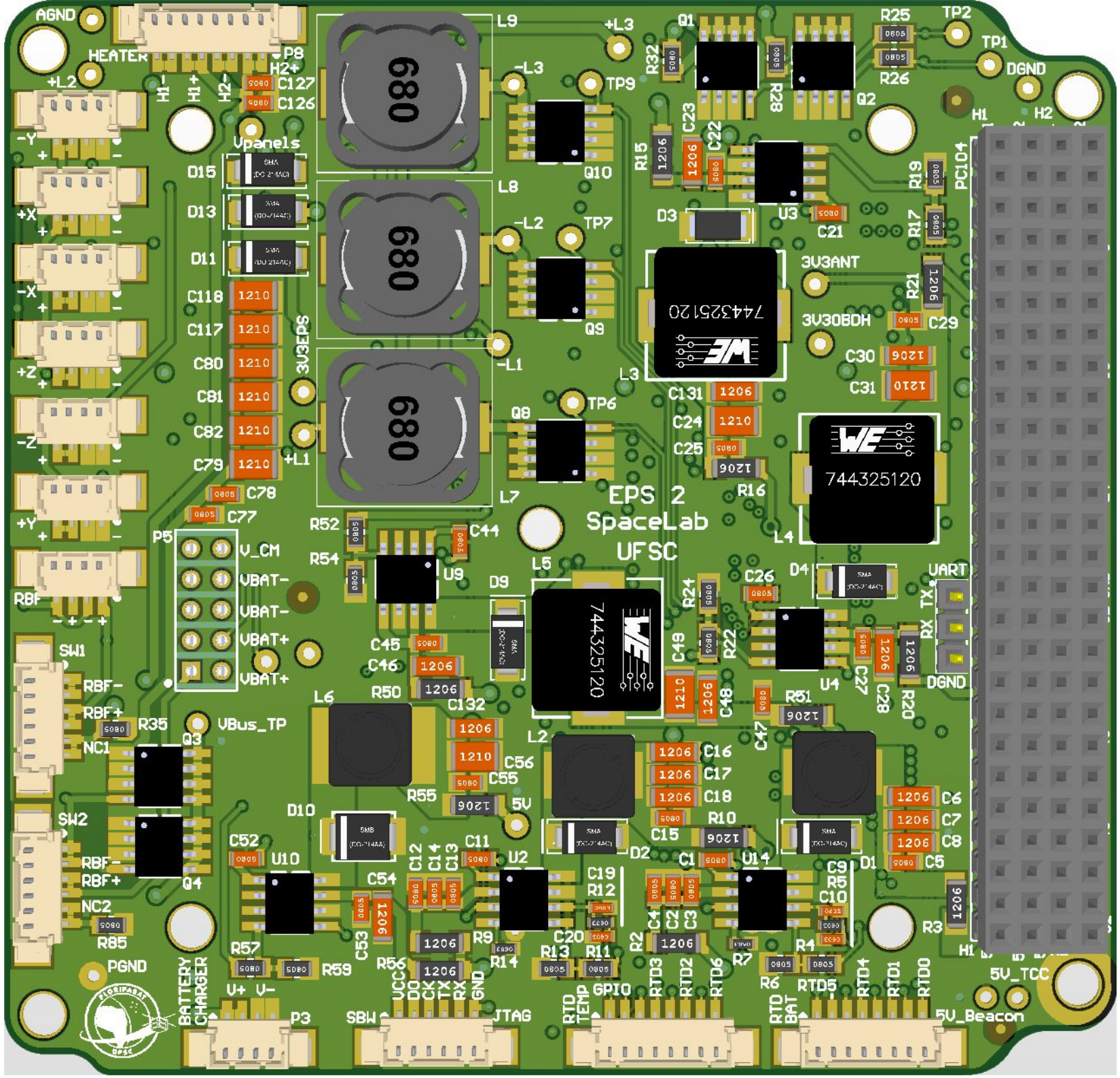
EPS 2
SpaceLab
UFSC
AGND
HEATER
P8
H2+
C127
C126
H1-
H1+
H2-
+L2
-Y
+X
-X
+Z
-Z
+Y
RBF
SW1
RBF-
RBF+
NC1
SW2
NC2
R85
PGND
BATTERY CHARGER
V+
V-
P3
Vpanels
D15
D13
D11
C118
C117
C80
C81
C82
C79
C78
C77
3V3EPS
+L1
P5
V_CM
VBAT-
VBAT+
VBus_TP
R35
Q3
Q4
R52
R54
U9
C44
D9
C45
C46
R50
L6
C132
C56
C55
R55
D10
C52
U10
C54
C53
R57
R59
R56
V_CC
DO
CK
TX
RX
GND
SBW
JTAG
L9
-L3
+L3
TP9
Q10
L8
-L2
TP7
Q9
-L1
TP6
Q8
L7
L5
L2
5V
C11
U2
C12
C14
C13
R9
R14
C20
R13
R11
R12
C19
R2
RTD3
RTD2
RTD6
GPIO
RTD TEMP
Q1
Q2
R32
R28
R25
R26
TP2
TP1
DGND
H1
H2
R15
C23
C22
U3
D3
C21
R19
R17
PC104
3V3ANT
3V30BDH
R21
C29
C30
C31
C131
C24
C25
R16
L3
L4
744325120
D4
C26
R24
R22
C49
C48
U4
R51
C47
C27
C28
R20
UART
TX
RX
DGND
C16
C17
C18
R10
C15
D2
C1
U14
C9
R5
C10
D1
C6
C7
C8
C5
R3
H1
C4
C2
C3
R7
R4
R6
RTD5
RTD4
RTD1
RTD0
RTD BAT
5V_TCC
5V_Beacon

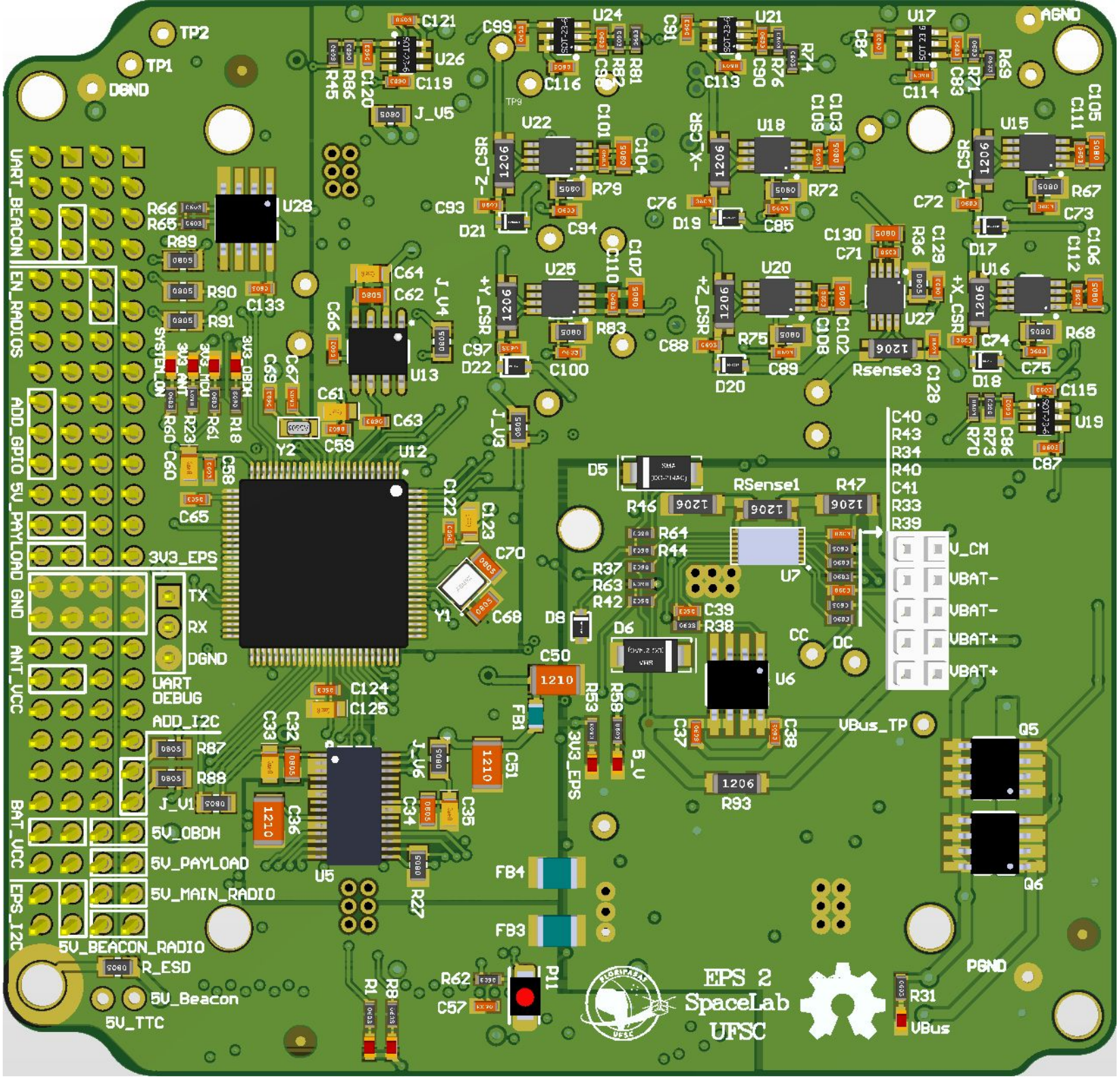
EPS 2
SpaceLab
UFSC
TP2
TP1
DGND
AGND
PGND
UART_BEACON
EN_RADIOS
ADD_GPIO
5V_PAYLOAD
GND
ANT_VCC
BAT_VCC
EPS_I2C
3V3_EPS
TX
RX
DGND
UART DEBUG
ADD_I2C
5V_OBDH
5V_PAYLOAD
5V_MAIN_RADIO
5V_BEACON_RADIO
R_ESD
5V_Beacon
5V_TTC
SYSTEM_ON
3V3_ANT
3V3_MCU
3V3_OBDH
-Z_CSR
-X_CSR
-Y_CSR
+Y_CSR
+Z_CSR
+X_CSR
RSense1
RSense3
V_CM
VBAT-
VBAT-
VBAT+
VBAT+
CC
DC
VBus_TP
5_V
3V3_EPS
VBus