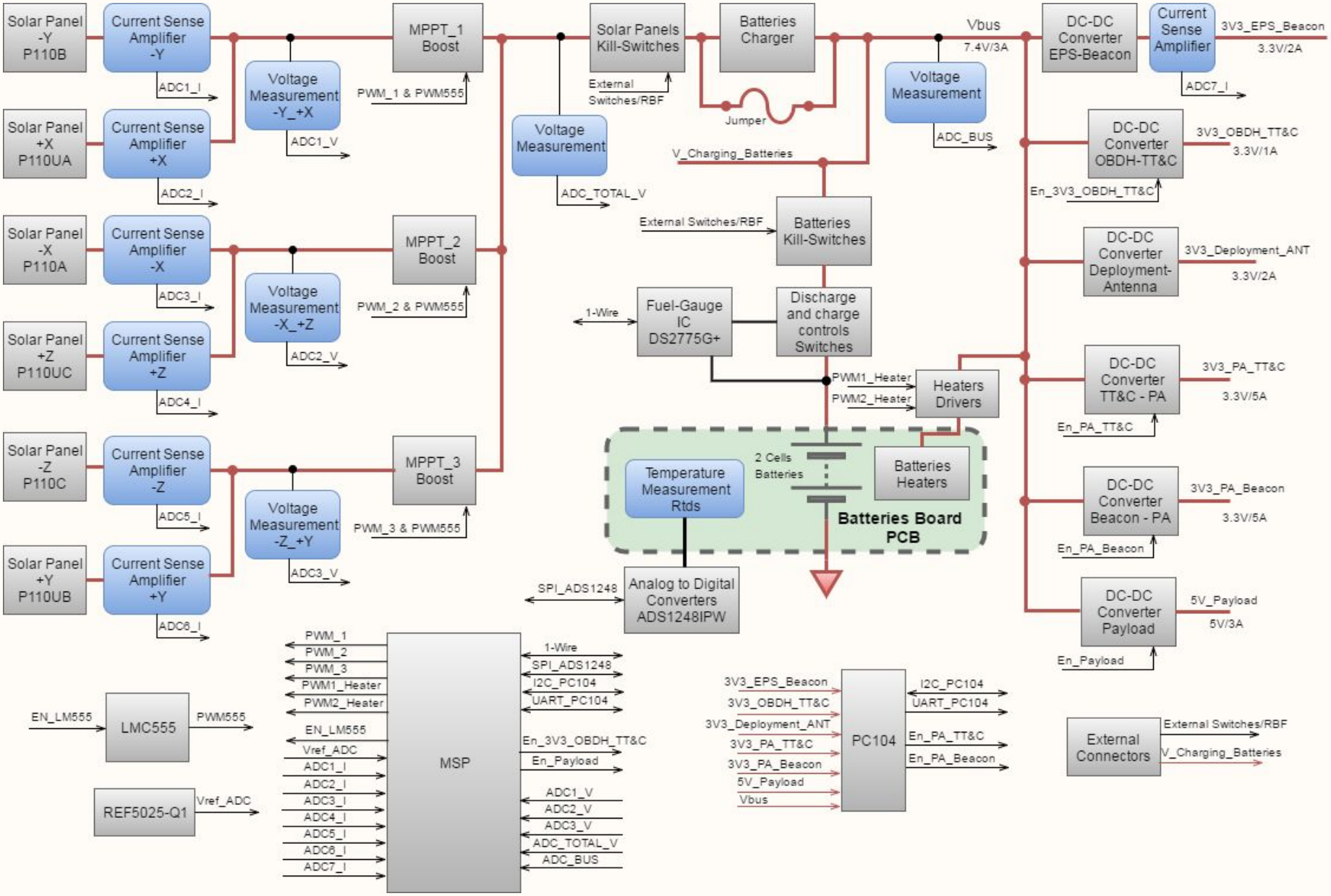

Title **Block diagram**			UFSC - SpaceLab University Campus - Trindade Dep. of Electrical Engineering - CTC Florianópolis, Santa Catarina, Brazil CEP: 88040 - 900
Size: A3	Project: FloripaSat	Revision: V0.0	
Date: 14/04/2019	Time: 12:06:46	Sheet 1 of 11	
Drawn by: Sara V. Martinez		Model: Flight	

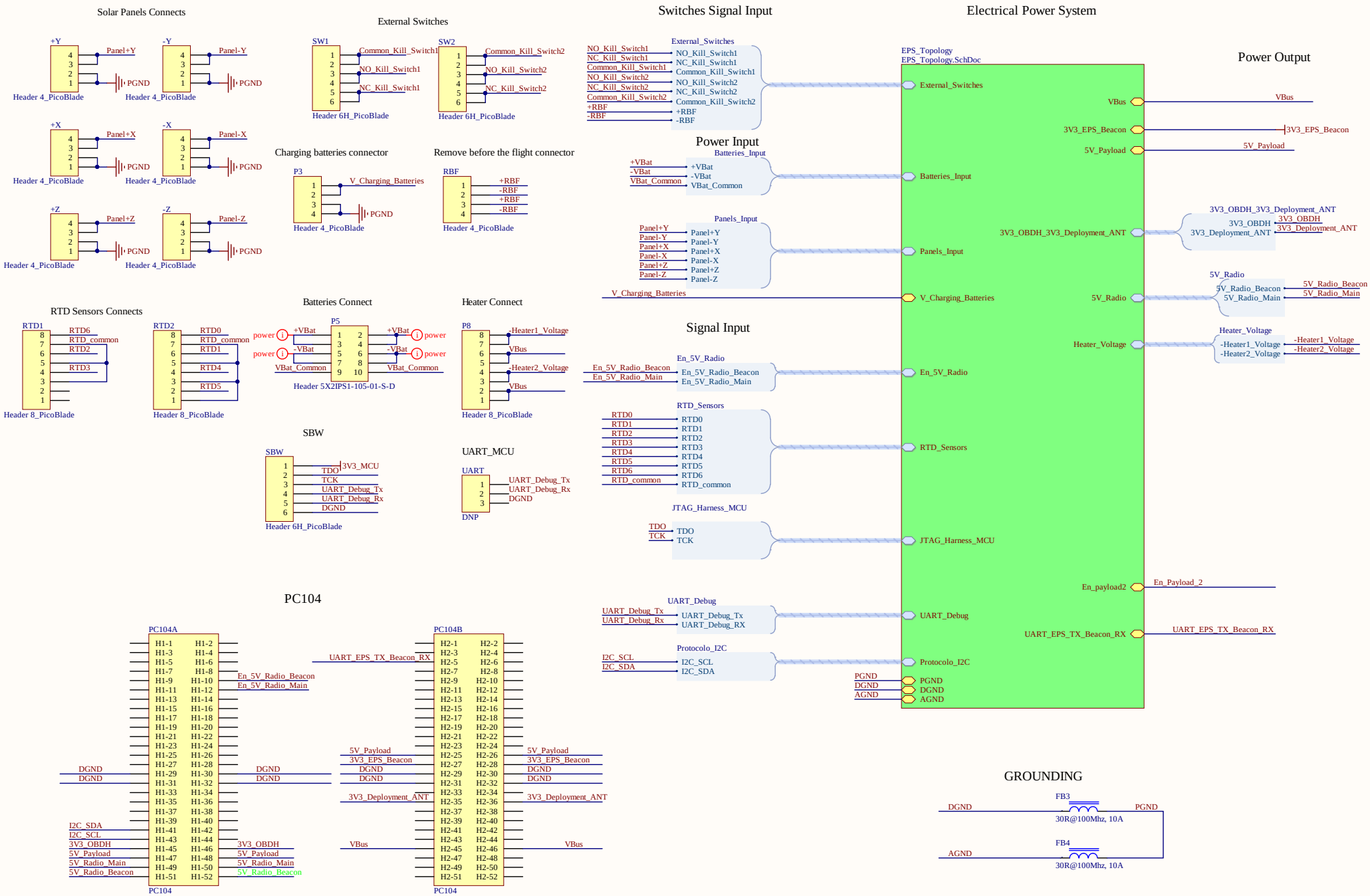
Solar Panels Connects
+Y
Panel+Y
-Y
Panel-Y
PGND
Header 4_PicoBlade
+X
Panel+X
-X
Panel-X
+Z
Panel+Z
-Z
Panel-Z
External Switches
SW1
Common_Kill_Switch1
NO_Kill_Switch1
NC_Kill_Switch1
Header 6H_PicoBlade
SW2
Common_Kill_Switch2
NO_Kill_Switch2
NC_Kill_Switch2
Charging batteries connector
P3
V_Charging_Batteries
Remove before the flight connector
RBF
+RBF
-RBF
RTD Sensors Connects
RTD1
RTD6
RTD_common
RTD2
RTD3
Header 8_PicoBlade
RTD2
RTD0
RTD1
RTD4
RTD5
Batteries Connect
P5
power
+VBat
-VBat
VBat_Common
Header 5X2IPS1-105-01-S-D
Heater Connect
P8
-Heater1_Voltage
VBus
-Heater2_Voltage
SBW
3V3_MCU
TDO
TCK
UART_Debug_Tx
UART_Debug_Rx
DGND
UART_MCU
UART
DNP
PC104
PC104A
PC104B
En_5V_Radio_Beacon
En_5V_Radio_Main
UART_EPS_TX_Beacon_RX
5V_Payload
3V3_EPS_Beacon
3V3_Deployment_ANT
I2C_SDA
I2C_SCL
3V3_OBDH
5V_Radio_Main
5V_Radio_Beacon
Switches Signal Input
External_Switches
NO_Kill_Switch1
NC_Kill_Switch1
Common_Kill_Switch1
NO_Kill_Switch2
NC_Kill_Switch2
Common_Kill_Switch2
+RBF
-RBF
Power Input
Batteries_Input
+VBat
-VBat
VBat_Common
Panels_Input
Panel+Y
Panel-Y
Panel+X
Panel-X
Panel+Z
Panel-Z
V_Charging_Batteries
Signal Input
En_5V_Radio
En_5V_Radio_Beacon
En_5V_Radio_Main
RTD_Sensors
RTD0
RTD1
RTD2
RTD3
RTD4
RTD5
RTD6
RTD_common
JTAG_Harness_MCU
TDO
TCK
UART_Debug
UART_Debug_Tx
UART_Debug_Rx
Protocolo_I2C
I2C_SCL
I2C_SDA
PGND
DGND
AGND
Electrical Power System
EPS_Topology
EPS_Topology.SchDoc
External_Switches
VBus
3V3_EPS_Beacon
5V_Payload
Batteries_Input
Panels_Input
3V3_OBDH_3V3_Deployment_ANT
V_Charging_Batteries
5V_Radio
Heater_Voltage
En_5V_Radio
RTD_Sensors
JTAG_Harness_MCU
En_payload2
En_Payload_2
UART_Debug
UART_EPS_TX_Beacon_RX
Protocolo_I2C
Power Output
3V3_OBDH_3V3_Deployment_ANT
3V3_OBDH
3V3_Deployment_ANT
5V_Radio
5V_Radio_Beacon
5V_Radio_Main
Heater_Voltage
-Heater1_Voltage
-Heater2_Voltage
GROUNDING
FB3
FB4
30R@100Mhz, 10A
Title EPS Interface
Size: A3
Project: FloripaSat
Revision: V0.0
Date: 14/04/2019
Time: 12:06:46
Sheet 2 of 11
Drawn by: Sara V. Martinez
Model: Flight
UFSC - SpaceLab
University Campus - Trindade
Dep. of Electrical Engineering - CTC
Florianópolis, Santa Catarina, Brazil
CEP: 88040 - 900

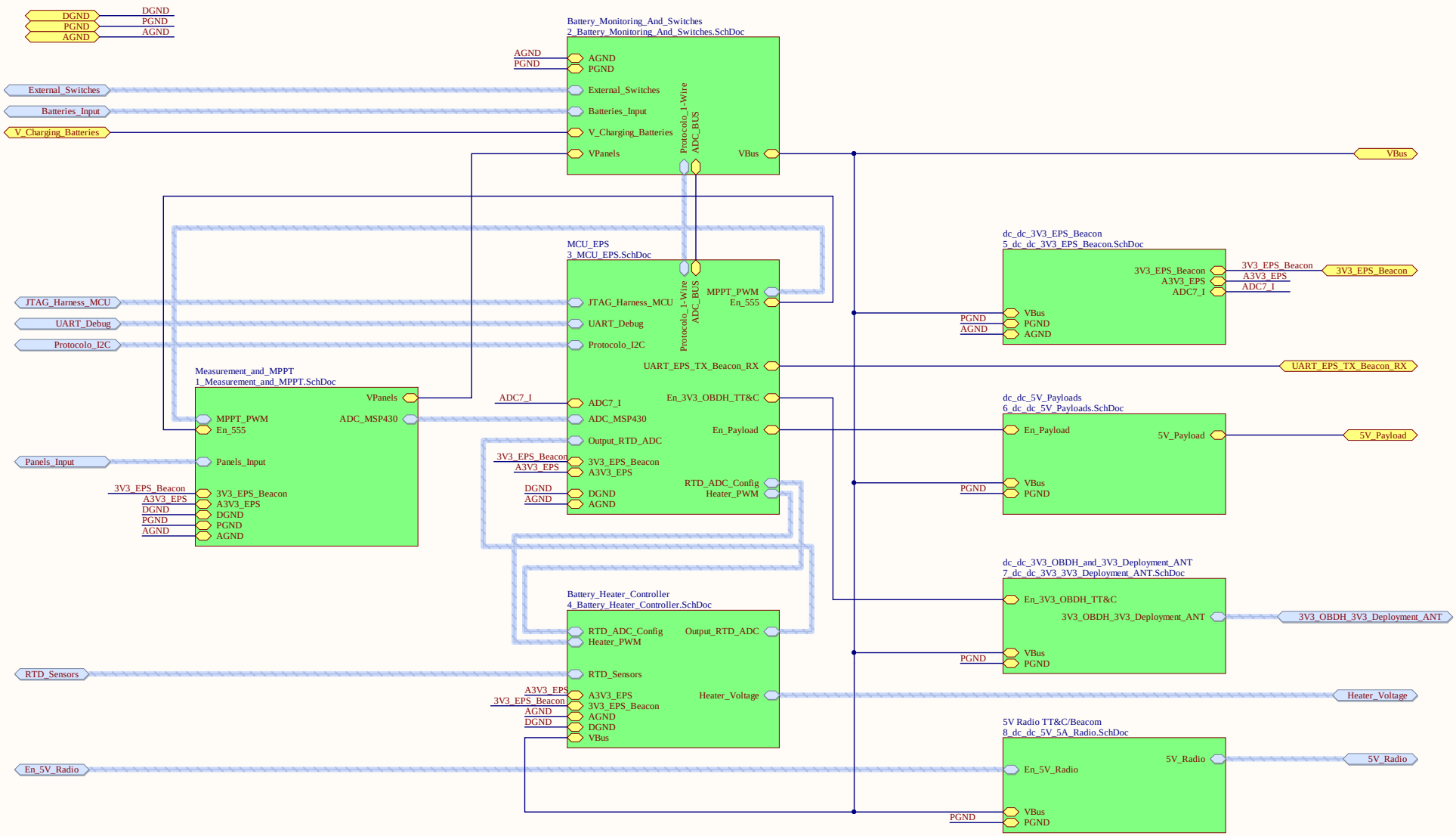

Title	**EPS Topology**		
Size: A3	Project: FloripaSat	Revision: V0.0	
Date: 14/04/2019	Time: 12:06:46	Sheet 3 of 11	
Drawn by: Sara V. Martinez		Model: *	

UFSC - SpaceLab
University Campus - Trindade
Dep. of Electrical Engineering - CTC
Florianópolis, Santa Catarina, Brazil
CEP: 88040 - 900

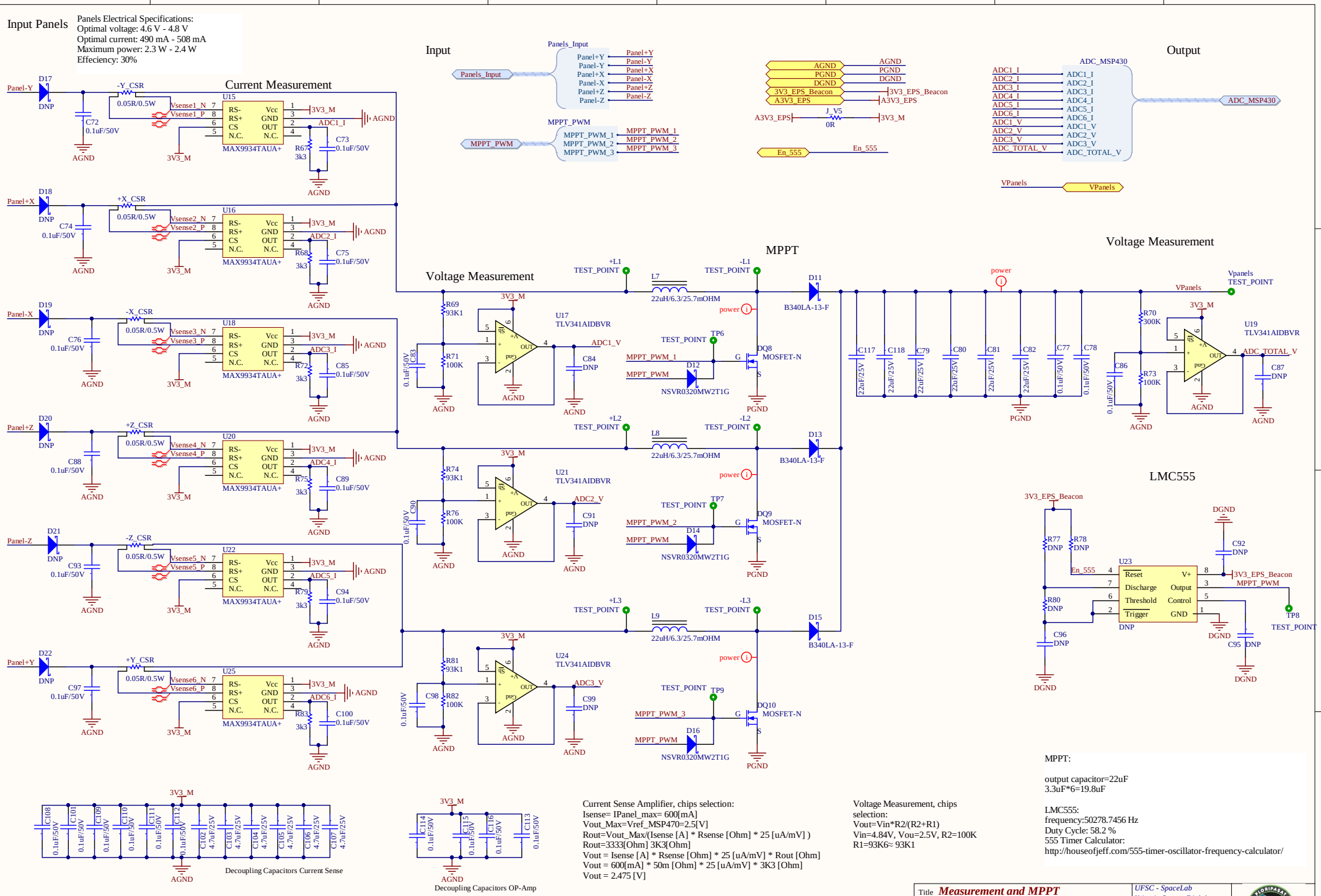
Input Panels
Panels Electrical Specifications:
Optimal voltage: 4.6 V - 4.8 V
Optimal current: 490 mA - 508 mA
Maximum power: 2.3 W - 2.4 W
Effeciency: 30%
Current Measurement
Input
Output
Voltage Measurement
MPPT
LMC555
MAX9934TAUA+
TLV341AIDBVR
MOSFET-N
NSVR0320MW2T1G
B340LA-13-F
22uH/6.3/25.7mOHM
Decoupling Capacitors Current Sense
Decoupling Capacitors OP-Amp
Current Sense Amplifier, chips selection:
Isense= IPanel_max= 600[mA]
Vout_Max=Vref_MSP470=2.5[V]
Rout=Vout_Max/(Isense [A] * Rsense [Ohm] * 25 [uA/mV])
Rout=3333[Ohm] 3K3[Ohm]
Vout = Isense [A] * Rsense [Ohm] * 25 [uA/mV] * Rout [Ohm]
Vout = 600[mA] * 50m [Ohm] * 25 [uA/mV] * 3K3 [Ohm]
Vout = 2.475 [V]
Voltage Measurement, chips selection:
Vout=Vin*R2/(R2+R1)
Vin=4.84V, Vou=2.5V, R2=100K
R1=93K6~ 93K1
MPPT:
output capacitor=22uF
3.3uF*6=19.8uF
LMC555:
frequency:50278.7456 Hz
Duty Cycle: 58.2 %
555 Timer Calculator:
http://houseofjeff.com/555-timer-oscillator-frequency-calculator/
Title Measurement and MPPT
Size: A3
Project: FloripaSat
Revision: V0.0
Date: 14/04/2019
Time: 12:06:46
Sheet 4 of 11
Drawn by: Sara V. Martinez
Model: Flight
UFSC - SpaceLab
University Campus - Trindade
Dep. of Electrical Engineering - CTC
Florianópolis, Santa Catarina, Brazil
CEP: 88040 - 900

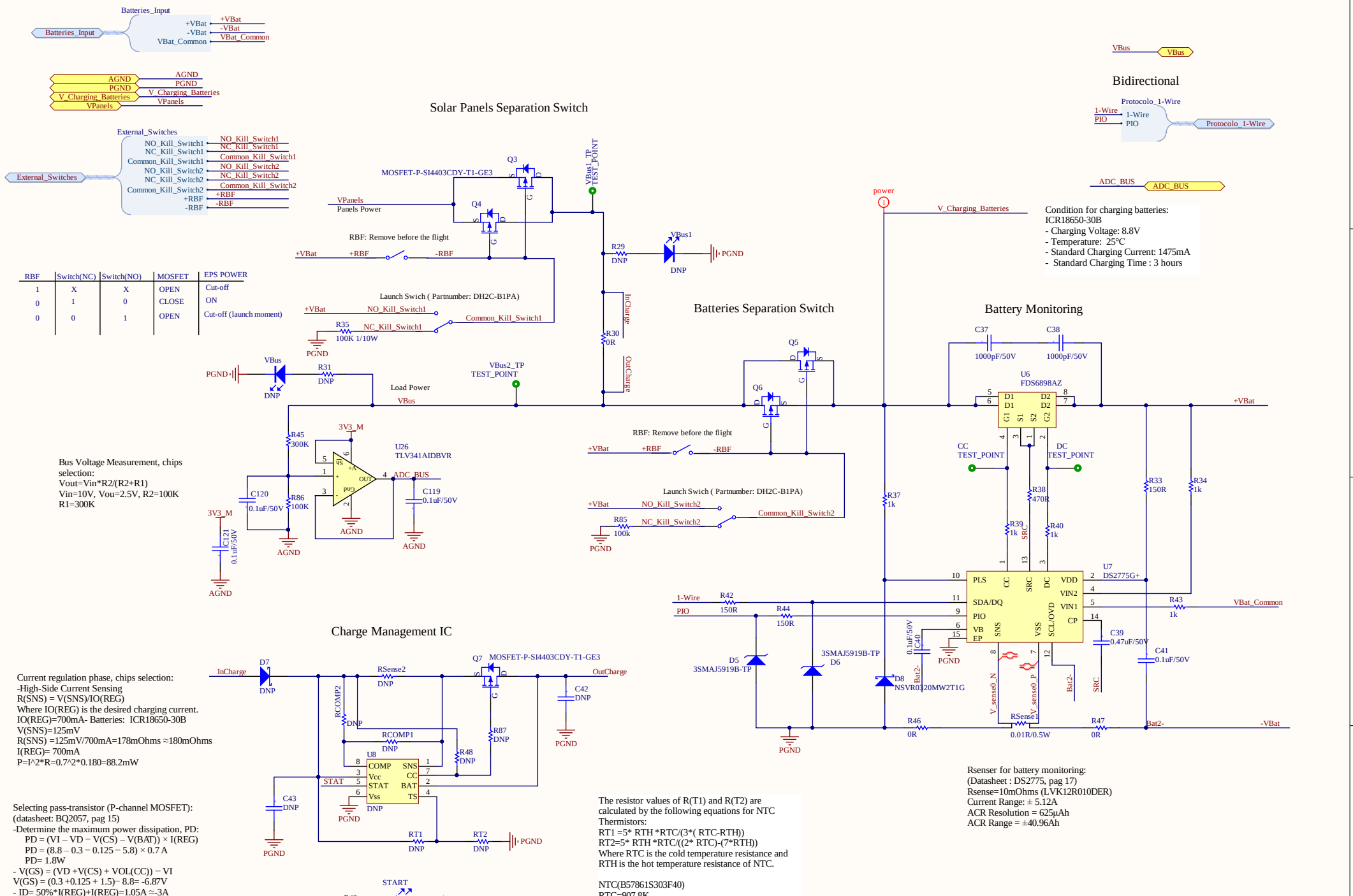
Batteries_Input
+VBat
-VBat
VBat_Common
AGND
PGND
V_Charging_Batteries
VPanels
External_Switches
NO_Kill_Switch1
NC_Kill_Switch1
Common_Kill_Switch1
NO_Kill_Switch2
NC_Kill_Switch2
Common_Kill_Switch2
+RBF
-RBF
Solar Panels Separation Switch
MOSFET-P-SI4403CDY-T1-GE3
Q3
Q4
VPanels
Panels Power
VBus1_TP
TEST_POINT
RBF: Remove before the flight
R29
DNP
VBus1
Launch Swich (Partnumber: DH2C-B1PA)
R35
100K 1/10W
R30
0R
InCharge
OutCharge
Load Power
VBus
VBus2_TP
TEST_POINT
R31
DNP
Bus Voltage Measurement, chips selection:
Vout=Vin*R2/(R2+R1)
Vin=10V, Vou=2.5V, R2=100K
R1=300K
R45
300K
R86
100K
C120
0.1uF/50V
C121
0.1uF/50V
3V3_M
U26
TLV341AIDBVR
ADC_BUS
C119
0.1uF/50V
Batteries Separation Switch
Q5
Q6
R85
100k
NO_Kill_Switch2
NC_Kill_Switch2
Common_Kill_Switch2
Battery Monitoring
C37
1000pF/50V
C38
1000pF/50V
U6
FDS6898AZ
CC
TEST_POINT
DC
TEST_POINT
R38
470R
R39
1k
R40
1k
R33
150R
R34
1k
R37
1k
U7
DS2775G+
R43
1k
VBat_Common
C39
0.47uF/50V
C41
0.1uF/50V
1-Wire
PIO
R42
150R
R44
150R
D5
3SMAJ5919B-TP
D6
3SMAJ5919B-TP
D8
NSVR0320MW2T1G
C40
0.1uF/50V
Bat2-
V_sense0_N
V_sense0_P
RSense1
0.01R/0.5W
R46
0R
R47
0R
-VBat
Charge Management IC
D7
DNP
RSense2
DNP
Q7
MOSFET-P-SI4403CDY-T1-GE3
C42
DNP
RCOMP2
DNP
RCOMP1
DNP
R87
DNP
R48
DNP
U8
COMP
Vcc
STAT
Vss
SNS
CC
BAT
TS
C43
DNP
RT1
DNP
RT2
DNP
STAT
START
R49
DNP
Bidirectional
Protocolo_1-Wire
ADC_BUS
Condition for charging batteries:
ICR18650-30B
- Charging Voltage: 8.8V
- Temperature: 25°C
- Standard Charging Current: 1475mA
- Standard Charging Time : 3 hours
Current regulation phase, chips selection:
-High-Side Current Sensing
R(SNS) = V(SNS)/IO(REG)
Where IO(REG) is the desired charging current.
IO(REG)=700mA- Batteries: ICR18650-30B
V(SNS)=125mV
R(SNS) =125mV/700mA=178mOhms ≈180mOhms
I(REG)= 700mA
P=I^2*R=0.7^2*0.180=88.2mW
Selecting pass-transistor (P-channel MOSFET):
(datasheet: BQ2057, pag 15)
-Determine the maximum power dissipation, PD:
PD = (VI – VD − V(CS) – V(BAT)) × I(REG)
PD = (8.8 – 0.3 − 0.125 − 5.8) × 0.7 A
PD= 1.8W
- V(GS) = (VD +V(CS) + VOL(CC)) − VI
V(GS) = (0.3 +0.125 + 1.5)− 8.8= -6.87V
- ID= 50%*I(REG)+I(REG)=1.05A ≈-3A
- MOSFET with gate threshold voltage, V(GSth), rating less than the calculated V(GS)
The resistor values of R(T1) and R(T2) are calculated by the following equations for NTC Thermistors:
RT1 =5* RTH *RTC/(3*(RTC-RTH))
RT2=5* RTH *RTC/((2* RTC)-(7*RTH))
Where RTC is the cold temperature resistance and RTH is the hot temperature resistance of NTC.
NTC(B57861S303F40)
RTC=907.8K
RTH=53.490K
RT1=8967.876068≈8.87kOhms
RT2=13654.27751≈13.7kOhms
Rsenser for battery monitoring:
(Datasheet : DS2775, pag 17)
Rsense=10mOhms (LVK12R010DER)
Current Range: ± 5.12A
ACR Resolution = 625µAh
ACR Range = ±40.96Ah
Title Batteries Monitor and Power Switches
Size: A3
Project: FloripaSat
Revision: V0.0
Date: 14/04/2019
Time: 12:06:47
Sheet 5 of 11
Drawn by: Sara V. Martinez
Model: Flight
UFSC - SpaceLab
University Campus - Trindade
Dep. of Electrical Engineering - CTC
Florianópolis, Santa Catarina, Brazil
CEP: 88040 - 900

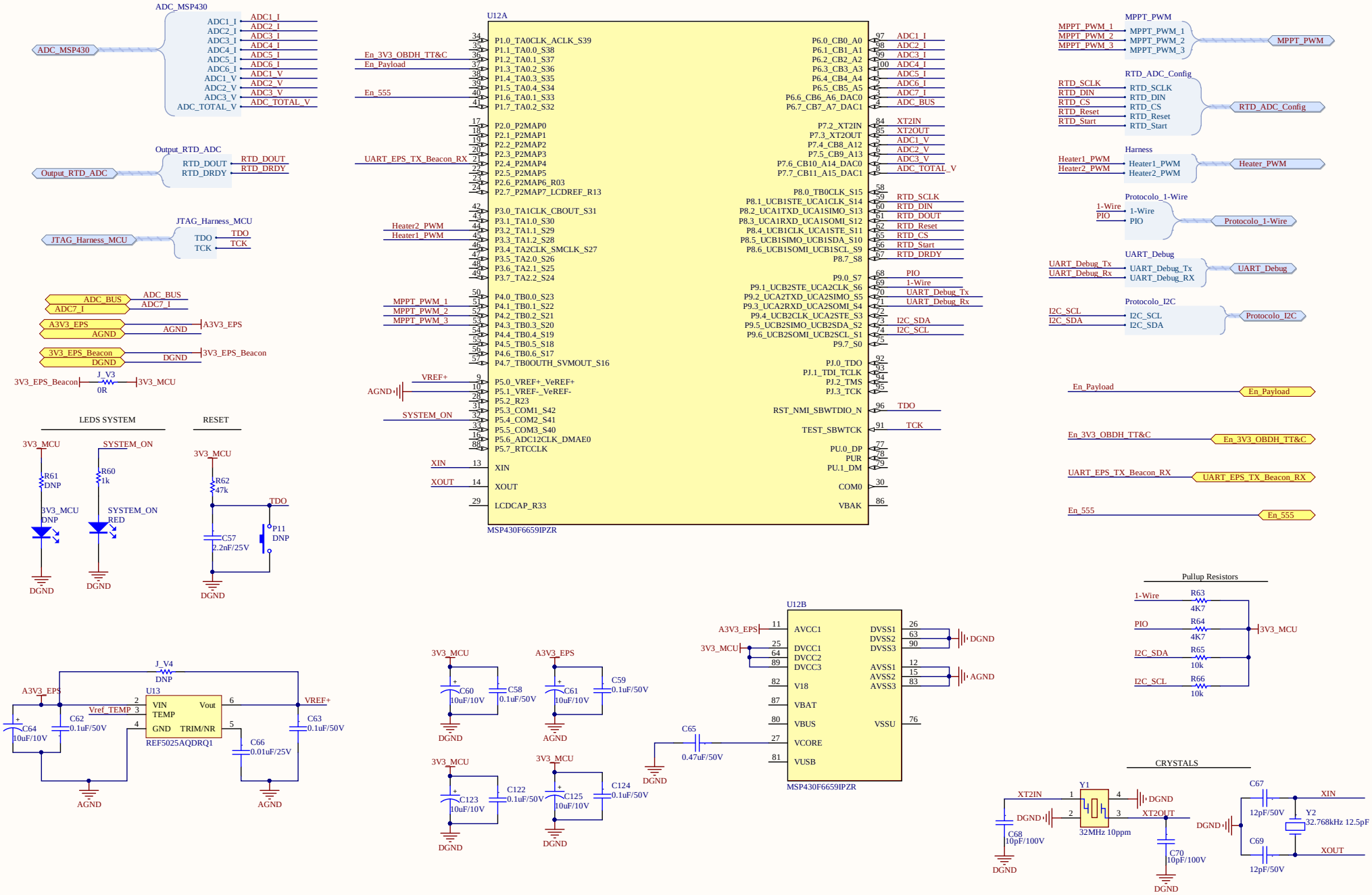

Title	*EPS MCU Main*		
Size: A3	Project: FloripaSat	Revision: V0.0	
Date: 14/04/2019	Time: 12:06:47	Sheet 6 of 11	
Drawn by: Sara V. Martinez		Model: Flight	

UFSC - SpaceLab
University Campus - Trindade
Dep. of Electrical Engineering - CTC
Florianópolis, Santa Catarina, Brazil
CEP: 88040 - 900

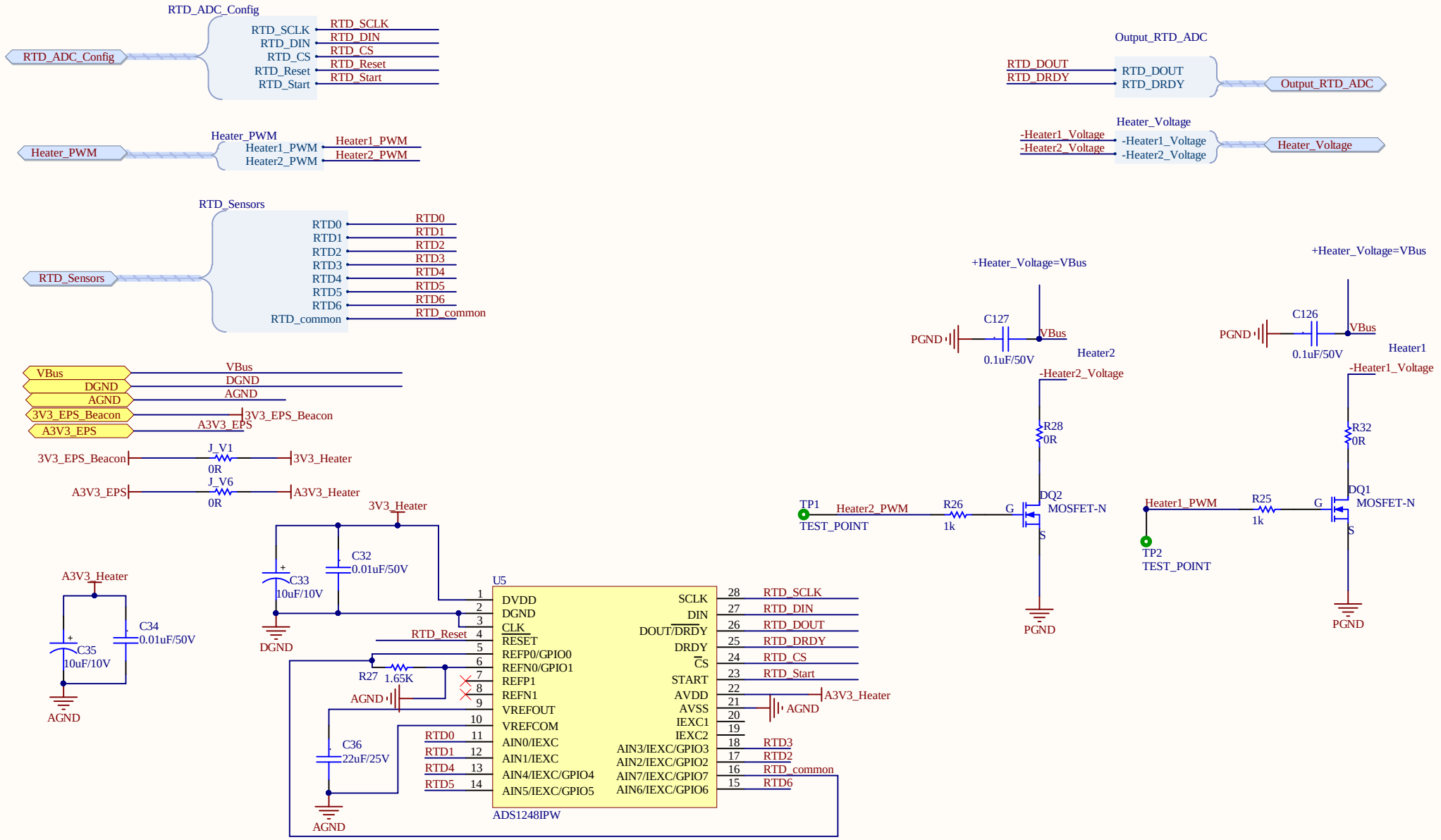

Title	**Batteries Heater Controller**		
Size: A4	Project: FloripaSat	Revision: V0.0	
Date: 14/04/2019	Time: 12:06:47	Sheet 7 of 11	
Drawn By: Sara V. Martínez		Model: Flight	

UFSC - SpaceLab
University Campus - Trindade
Dep. of Electrical Engineering - CTC
Florianópolis, Santa Catarina, Brazil
CEP: 88040 - 900

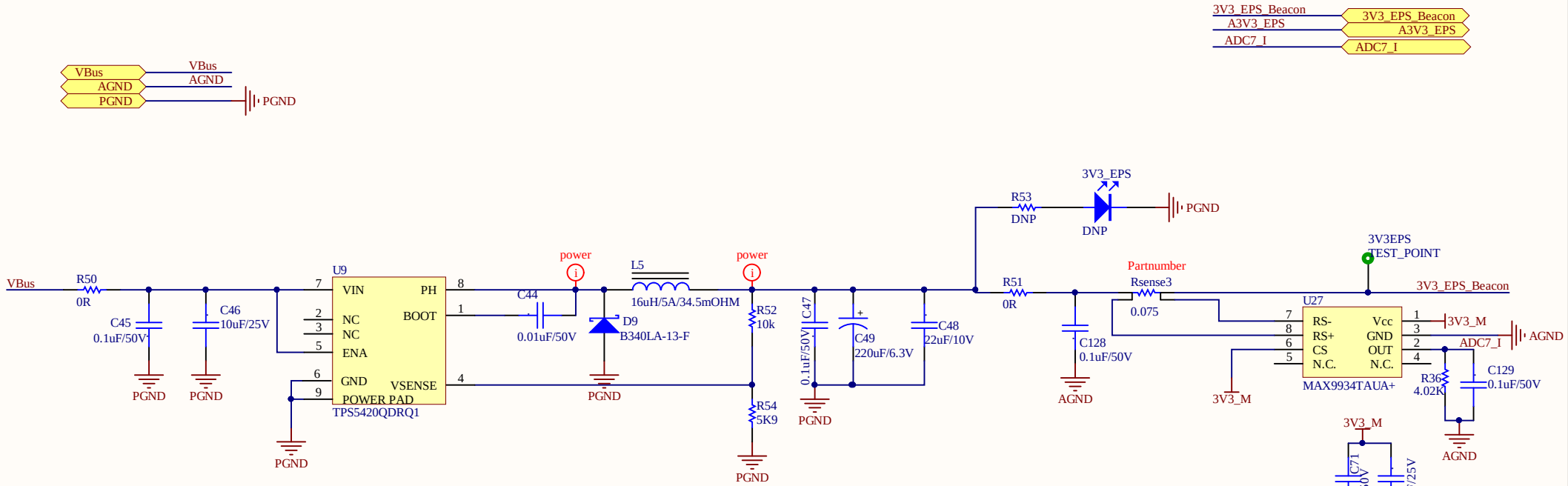

Beacon/EPS Digital dc/dc converter 3V3/2A:
Configuration:
VinMin =5.5V
VinMax = 15V
Vout = 3.3V
Iout = 2A
Footprint = 81.0 mm2
Total Pd = 1.21W

Current Sense Amplifier, chips selection:
I_EPS_Beacon=300[mA]
Vout_Max=Vref_MSP470=2.5[V]
Rout=Vout_Max/(Isense [A] * Rsense [Ohm] * 25 [uA/mV])
Rout=4065[Ohm] 4.02 k[Ohm]
Vout = Isense [A] * Rsense [Ohm] * 25 [uA/mV] * Rout [Ohm]
Vout = 300[mA] * 82m [Ohm] * 25 [uA/mV] * 4.02 k [Ohm]
Vout = 2.4723 [V]

Title	EPS/BCM Step-Down Converter		UFSC - SpaceLab University Campus - Trindade Dep. of Electrical Engineering - CTC Florianópolis, Santa Catarina, Brazil CEP: 88040 - 900
Size: A4	Project: FloripaSat	Revision: V0.0	
Date: 14/04/2019	Time: 12:06:47	Sheet 8 of 11	
Drawn By: Sara V. Martínez		Model: Flight	

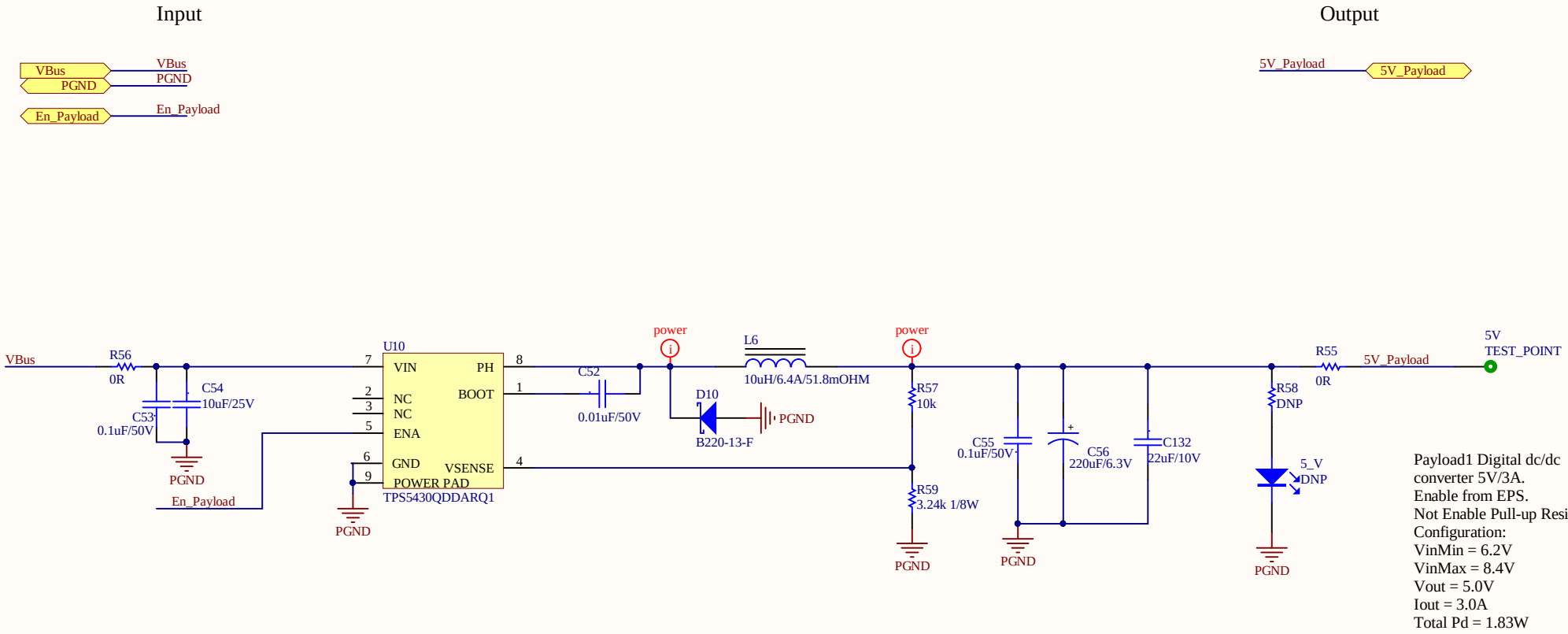

Title	***Payloads Step-Down Converters 5V/3A***		*UFSC - SpaceLab*
Size: A4	Project: FloripaSat	Revision: V0.0	*University Campus - Trindade*
Date: 14/04/2019	Time: 12:06:47	Sheet 9 of 11	*Dep. of Electrical Engineering - CTC*
Drawn By: Sara V. Martínez		Model: Flight	*Florianópolis, Santa Catarina, Brazil*
			CEP: 88040 - 900

Input

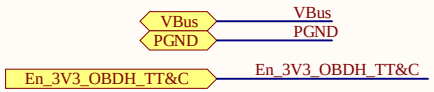

Output

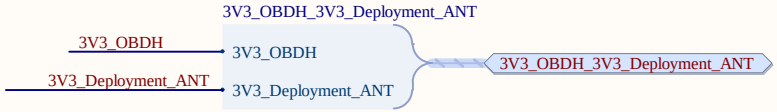

OBDH/TT&C Step-Down Converter 3V3/1A

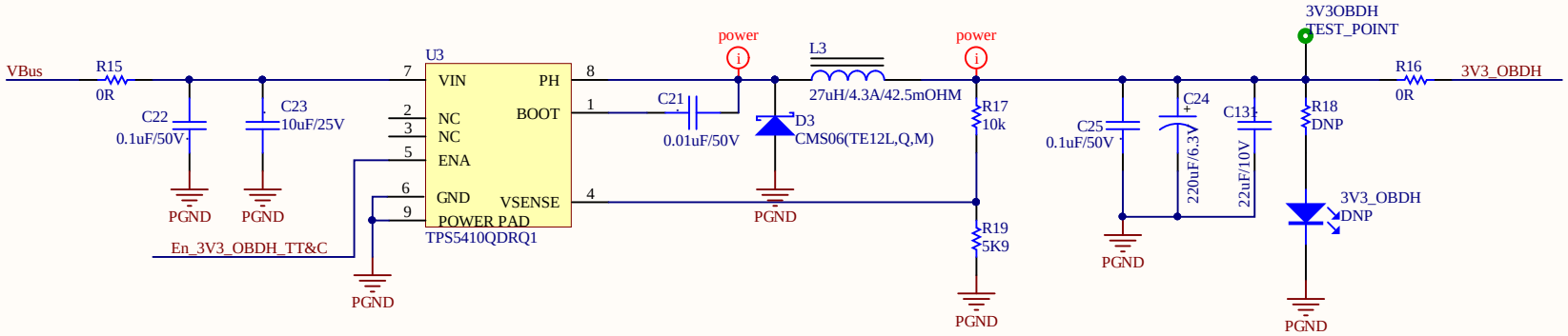

OBDH Digital dc/dc converter 3V3/1A.
Enable from EPS.
Configuration:
VinMin = 6.5V
VinMax = 15.0V
Vout = 3.3V
Iout = 1A
Pd = 0.58W

Deployment Antenna Step-Down Converter 3V3/2A

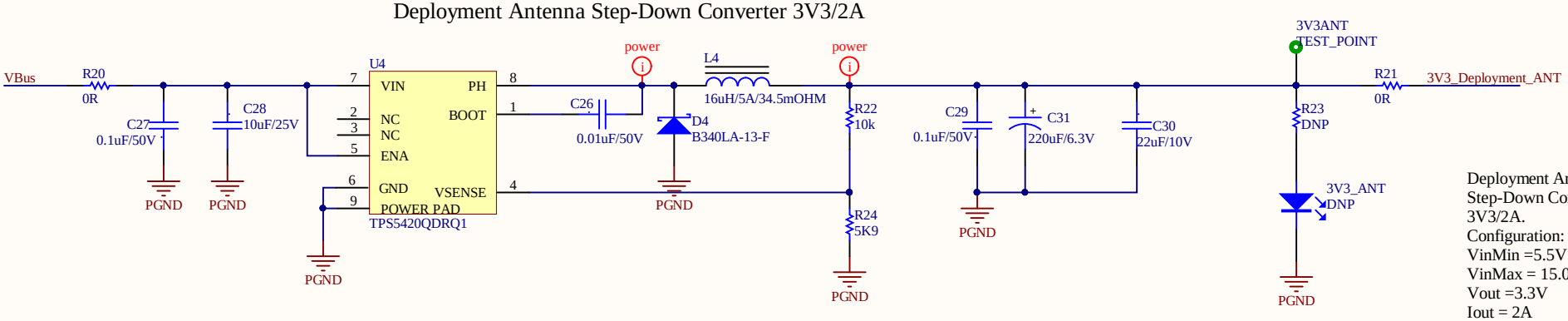

Deployment Antenna Step-Down Converter 3V3/2A.
Configuration:
VinMin =5.5V
VinMax = 15.0V
Vout =3.3V
Iout = 2A
Total Pd =1.08W

Title	***OBDH Step-Down 3V3/1A/2A***		*UFSC - SpaceLab*
Size: A4	Project: FloripaSat	Revision: V0.0	*University Campus - Trindade*
Date: 14/04/2019	Time: 12:06:47	Sheet 10 of 11	*Dep. of Electrical Engineering - CTC*
Drawn By: Sara V. Martínez		Model: Flight	*Florianópolis, Santa Catarina, Brazil*
			CEP: 88040 - 900

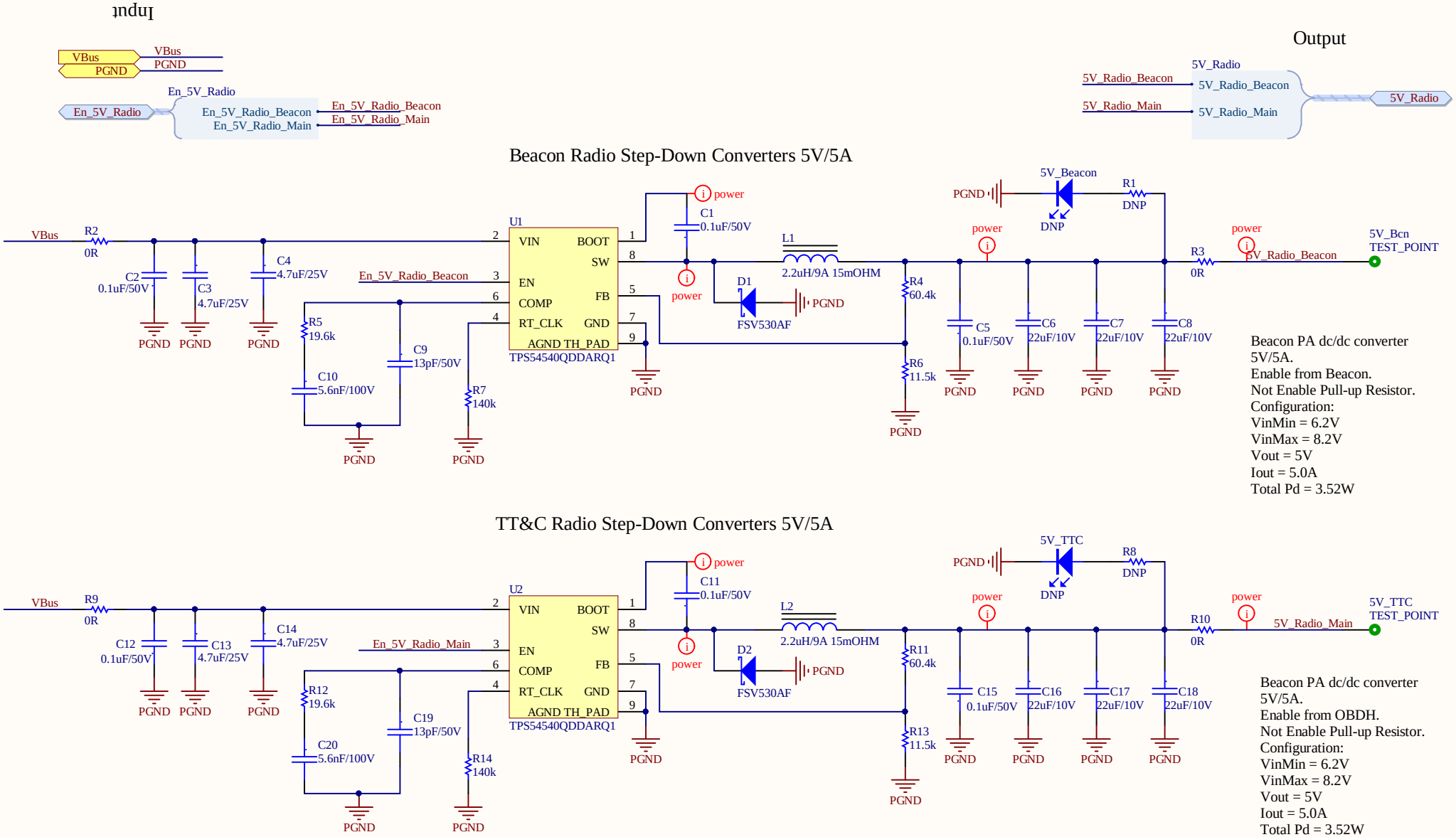

Title	**Radios Step-Down Converters 5V/3A**		
Size: A4	Project: FloripaSat	Revision: V0.0	
Date: 14/04/2019	Time: 12:06:47	Sheet 11 of 11	
Drawn By: Sara V. Martínez		Model: Flight	

UFSC - SpaceLab
University Campus - Trindade
Dep. of Electrical Engineering - CTC
Florianópolis, Santa Catarina, Brazil
CEP: 88040 - 900

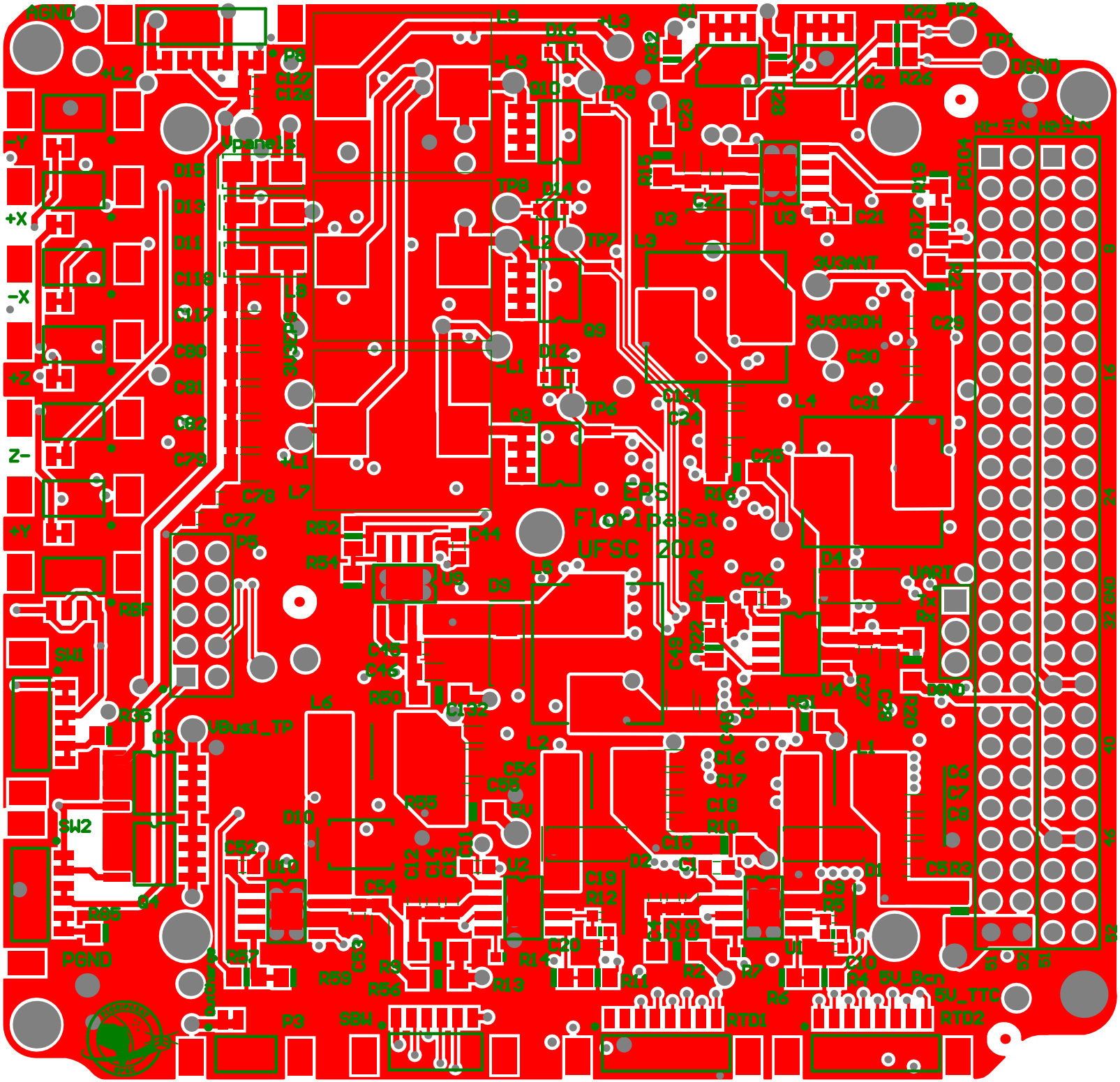
AGND
DGND
PGND
EPS
FloripaSat
UFSC 2018
Vpanels
3V3TPS
3V3ANT
3V30BDH
UART
Tx
Rx
5V_Bcn
5V_TTC
RTD1
RTD2
SBW
VBus1_TP
+X
-X
+Y
-Y
+Z
Z-
+L1
+L2
+L3
-L1
-L2
-L3
PC104

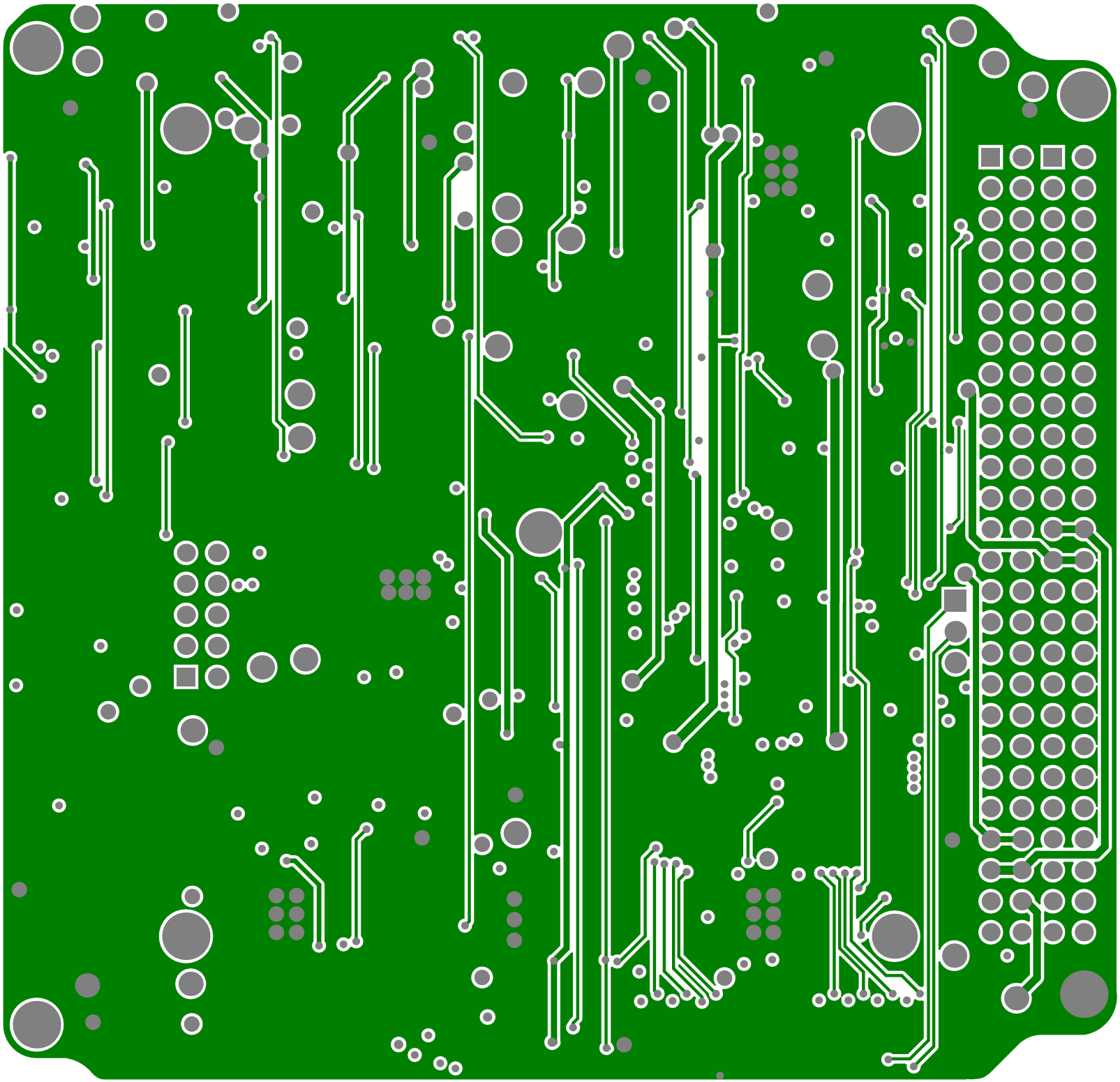

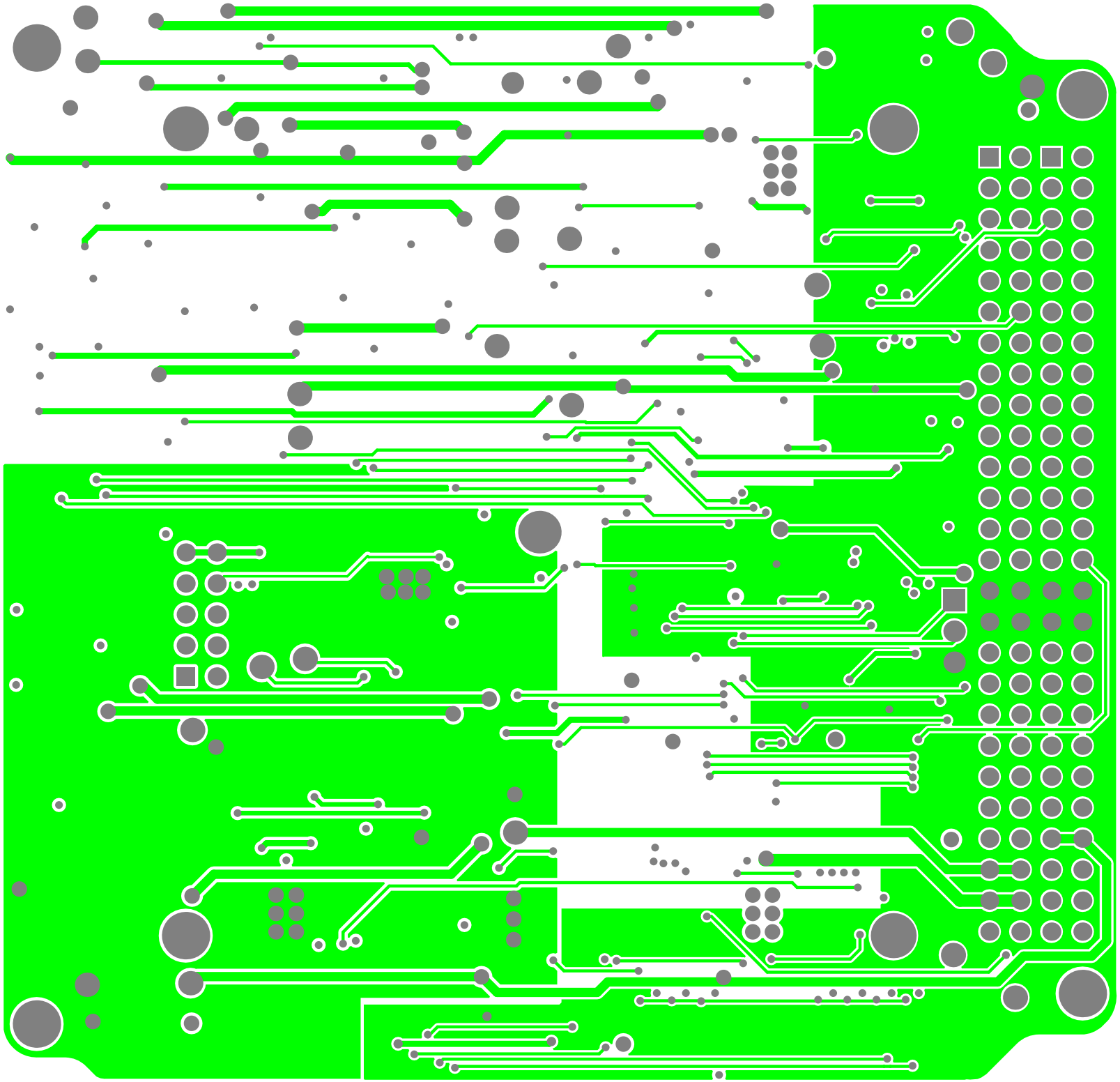

EPS
Flight Model
Floripa6at
UFSC2018
MSP430F6659IPZR
5V_Beacon
5V_TTC
DGND
AGND
PGND
VBus
VBus1_TP
VBus2_TP
STARTI
RCONFI
RSense1
RSense2
RSense3
3V3_EPS
1_V6
1_V4
1_V1
1_V5
1_V2
1_V3
3V3_Beacon
3V3_TTC
3V3_Payload
3V3_Payload_Sw
3V3_Payload_Sw2
3V3_Payload_Sw3
3V3_Payload_Sw4
3V3_Payload_Sw5
3V3_Payload_Sw6
3V3_Payload_Sw7
3V3_Payload_Sw8
3V3_Payload_Sw9
3V3_Payload_Sw10
3V3_Payload_Sw11
3V3_Payload_Sw12
3V3_Payload_Sw13
3V3_Payload_Sw14
3V3_Payload_Sw15
3V3_Payload_Sw16
3V3_Payload_Sw17
3V3_Payload_Sw18
3V3_Payload_Sw19
3V3_Payload_Sw20
3V3_Payload_Sw21
3V3_Payload_Sw22
3V3_Payload_Sw23
3V3_Payload_Sw24
3V3_Payload_Sw25
3V3_Payload_Sw26
3V3_Payload_Sw27
3V3_Payload_Sw28
3V3_Payload_Sw29
3V3_Payload_Sw30
3V3_Payload_Sw31
3V3_Payload_Sw32
3V3_Payload_Sw33
3V3_Payload_Sw34
3V3_Payload_Sw35
3V3_Payload_Sw36
3V3_Payload_Sw37
3V3_Payload_Sw38
3V3_Payload_Sw39
3V3_Payload_Sw40
3V3_Payload_Sw41
3V3_Payload_Sw42
3V3_Payload_Sw43
3V3_Payload_Sw44
3V3_Payload_Sw45
3V3_Payload_Sw46
3V3_Payload_Sw47
3V3_Payload_Sw48
3V3_Payload_Sw49
3V3_Payload_Sw50
3V3_Payload_Sw51
3V3_Payload_Sw52
3V3_Payload_Sw53
3V3_Payload_Sw54
3V3_Payload_Sw55
3V3_Payload_Sw56
3V3_Payload_Sw57
3V3_Payload_Sw58
3V3_Payload_Sw59
3V3_Payload_Sw60
3V3_Payload_Sw61
3V3_Payload_Sw62
3V3_Payload_Sw63
3V3_Payload_Sw64
3V3_Payload_Sw65
3V3_Payload_Sw66
3V3_Payload_Sw67
3V3_Payload_Sw68
3V3_Payload_Sw69
3V3_Payload_Sw70
3V3_Payload_Sw71
3V3_Payload_Sw72
3V3_Payload_Sw73
3V3_Payload_Sw74
3V3_Payload_Sw75
3V3_Payload_Sw76
3V3_Payload_Sw77
3V3_Payload_Sw78
3V3_Payload_Sw79
3V3_Payload_Sw80
3V3_Payload_Sw81
3V3_Payload_Sw82
3V3_Payload_Sw83
3V3_Payload_Sw84
3V3_Payload_Sw85
3V3_Payload_Sw86
3V3_Payload_Sw87
3V3_Payload_Sw88
3V3_Payload_Sw89
3V3_Payload_Sw90
3V3_Payload_Sw91
3V3_Payload_Sw92
3V3_Payload_Sw93
3V3_Payload_Sw94
3V3_Payload_Sw95
3V3_Payload_Sw96
3V3_Payload_Sw97
3V3_Payload_Sw98
3V3_Payload_Sw99
3V3_Payload_Sw100

FD3
FD2
FD4
P8
L9
L8
L7
D16
D14
D12
Q10
Q9
Q8
Q1
Q2
R32
R28
R25
R26
R15
C23
C22
U3
C21
D3
L3
R19
R17
R21
C29
C30
C31
C131
C24
C25
R16
L4
U12
D15
D13
D11
C118
C117
C80
C81
C82
C79
C78
C77
-Y
+X
-X
+Z
-Z
+Y
RBF
R52
R54
U9
C44
D9
L5
R24
R22
C26
D4
U4
C27
C28
R20
UART
C45
C46
R50
C43
C48
C47
R51
L6
C132
C56
C55
R55
L2
C16
C17
C18
C15
L1
C6
C7
C8
C5
D10
D2
R10
D1
SW1
SW2
R35
Q3
Q4
C52
U10
C53
C54
C11
C12
C14
C13
U2
C61
C20
R12
R9
R56
R14
R13
R11
C4
C2
C3
U1
C1
C63
R5
C10
R2
R7
R6
R4
R3
R57
R59
R85
P3
SBW
RTD1
RTD2

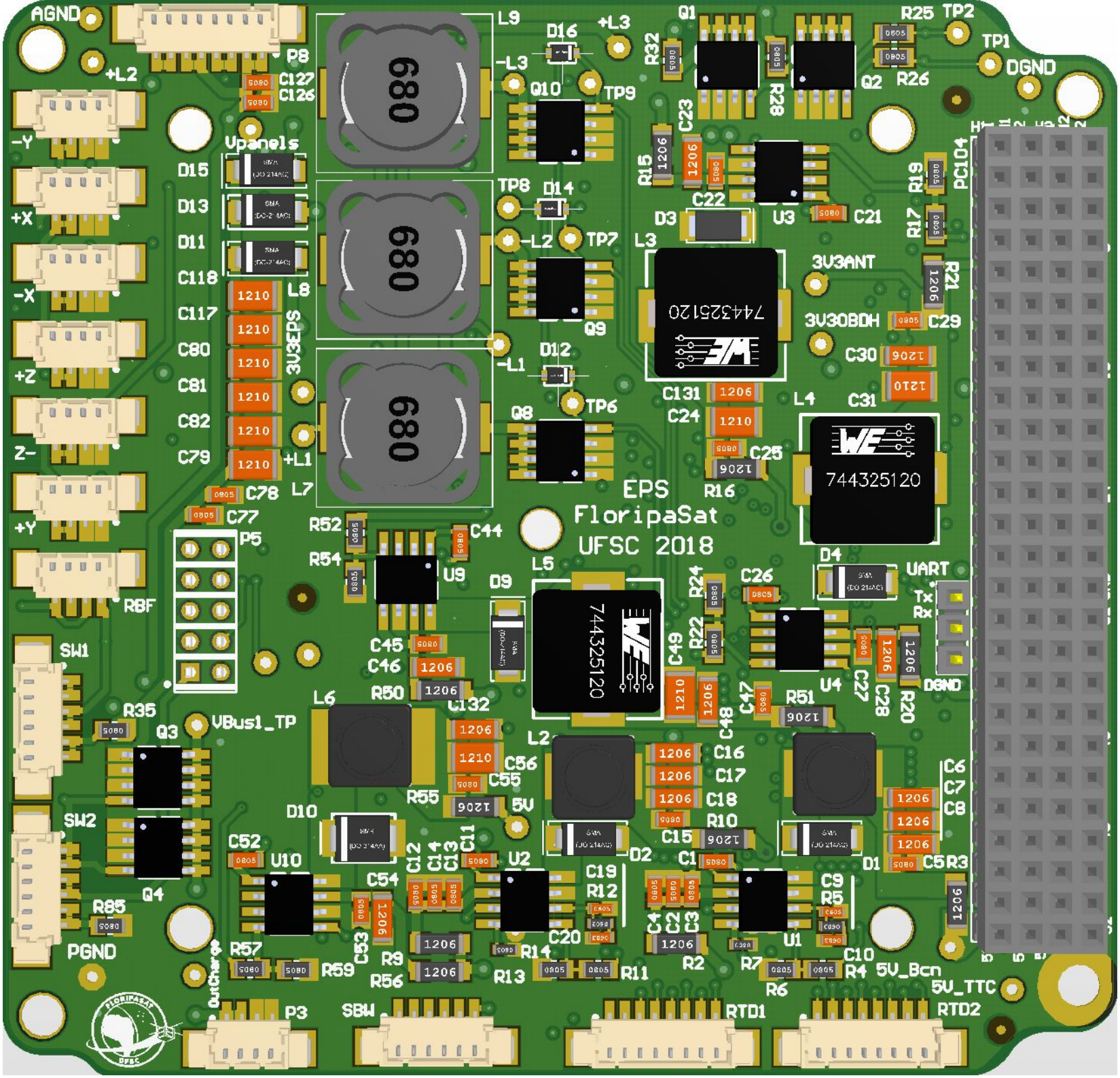
AGND
+L2
P8
C127
C126
-Y
+X
-X
+Z
Z-
+Y
RBF
Vpanels
D15
D13
D11
C118
C117
C80
C81
C82
C79
C78
C77
P5
L8
L7
3V3EPS
+L1
L9
-L3
D16
+L3
Q10
TP9
TP8
D14
-L2
TP7
Q9
-L1
D12
TP6
Q8
Q1
Q2
R32
R28
R25
R26
TP2
TP1
DGND
C23
R15
U3
C22
D3
C21
R19
R17
PC104
3V3ANT
R21
3V30BDH
C29
C30
L3
744325120
C131
C24
C25
R16
L4
C31
744325120
EPS
FloripaSat
UFSC 2018
R52
R54
C44
U9
D9
L5
744325120
D4
UART
Tx
Rx
DGND
R24
C26
R22
C49
U4
C27
C28
R20
C45
C46
R50
C132
C47
R51
C48
SW1
R35
VBus1_TP
Q3
L6
L2
C56
C55
R55
5V
C16
C17
C18
R10
C15
C6
C7
C8
SW2
D10
C52
U10
C12
C14
C13
C11
U2
D2
C19
R12
C1
D1
C5
R3
Q4
C54
C53
R9
R56
R14
R13
C20
C4
C2
C3
R2
U1
C9
R5
R7
R4
C10
R6
5V_Bcn
5V_TTC
R85
PGND
R57
R59
OutCharge
P3
SBW
RTD1
RTD2

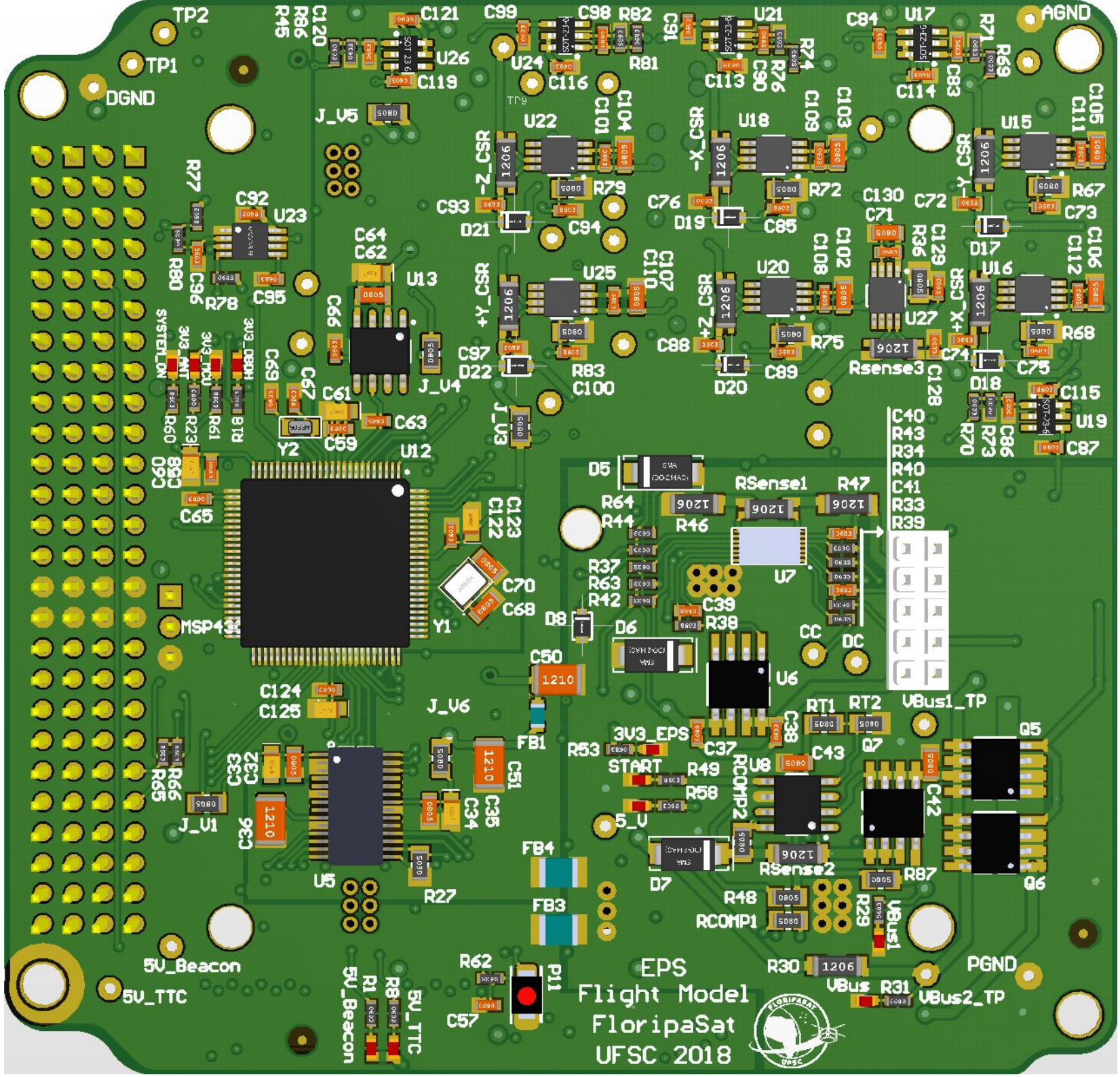
EPS
Flight Model
FloripaSat
UFSC 2018
TP2
TP1
DGND
AGND
PGND
5V_Beacon
5V_TTC
VBus1_TP
VBus2_TP
MSP430
SYSTEM_ON
3V3_ANT
3V3_MCU
3V3_EPS
START
RCOMP1
RCOMP2
RSense1
RSense2
Rsense3
+X_CSR
-X_CSR
+Y_CSR
-Y_CSR
+Z_CSR
-Z_CSR

Bill of Materials

GPS Interface

Source Data From: PCB Project FlightBoard_BPS.PrjPcb
Project: PCB Project FlightBoard_BPS.PrjPcb
Variant: None

Creation Date: 10/20/2020 10:38:48
Print Date: 10-Apr-20 12:08:54 PM

Column Name	Footprint	Comment	Label	Designator	Description	Quantity
	HDR1 Pin,Header 2236 - vertical	Header 5_PinsBlade	Header 5_PinsBlade	J1, J2, J3, J4, J5	Header, 5-Pin	5
	0805-LED	0.125W0.5W	RG1008_0.5W_0.125W_1206	D_C105, D_C107, D_C108, D_C109, D_C110, D_C111	Current Sense Resistors - SMD 0.25ohm 1% 2 Terminal	6
	0805-LED	SMP	LED0_0805	D1, D2, D3, D4, D5, D6, D7, D8, D9, D10, D11, D12, D13, D14, D15, D16, D17, D18, D19, D20, D21, D22, D23, D24, D25, D26, D27, D28, D29, D30, D31, D32, D33, D34, D35, D36, D37, D38, D39, D40,