CubeSat Drone: The Development of a CubeSat Experimental Testbed

Miguel A. Nunes
University of Hawaii
Hawaii Space Flight Laboratory
1680 East West Rd. POST 522
Honolulu, HI 96822
miguel.nunes@hsfl.hawaii.edu

Pedro Casau
University of Aveiro
Instituto de Telecomunicações
3810-193 Aveiro, Portugal
pcasau@ua.pt

***Abstract*—** This paper presents a hybrid control architecture for global trajectory tracking of an aerial vehicle with the form factor of a 3 U CubeSat. The vehicle is equipped with ten bidirectional propellers mounted on facets of its frame. We derive a dynamical model that accounts for the propeller layout and design a proportional-derivative (PD) feedback law combined with a hybrid supervisor to globally asymptotically stabilize the vehicle's pose along feasible reference trajectories. To solve the control allocation problem, we implement a minimum control effort algorithm. Simulation results demonstrate convergence of position and orientation errors and produce physically plausible rotor speed commands.

TABLE OF CONTENTS

1. INTRODUCTION 1
2. NOTATION & PRELIMINARIES 2
3. PROBLEM STATEMENT 2
4. CONTROLLER DESIGN 3
5. DRONE TESTBED 4
6. SIMULATION RESULTS 6
7. CONCLUSIONS 7
ACKNOWLEDGEMENTS 8
REFERENCES 8
BIOGRAPHY 8

1. INTRODUCTION

Over the past decade, CubeSats have evolved from educational demonstrators to indispensable platforms for Science, Earth Observation, in-orbit technology demonstrators, and commercial services (cf. [1]). This maturation is measurable: the cumulative number of nanosatellite launches continues to increase, and data from `nanosats.eu` project a record of 635 CubeSat launches by the end of 2025. These trends underscore a sustained demand for low-cost spacecraft and the supporting ground infrastructure needed to verify and validate their design.

As CubeSat technology matures, it enables the deployment of increasingly more complex missions, that require the coordination between multiple satellites in formation, also known as Satellite Swarms. Recently, NASA's *Starling* swarm, which consisted of a constellation of four 6U CubeSats, successfully operated in Low-Earth Orbit (LEO) through a combination of GPS-aided navigation solutions and optical systems to maintain coordination between the satellites and achieve operational success [2]. Another satellite swarm mission that is currently under preparation is SWARM-EX, which is comprised of three 3U satellites, and has outlined passively safe autonomous formation flying through hybrid differential-drag/propulsive control among three CubeSats. One final example is that of the PY4 mission, which consists of four 1.5U satellites and aims to reduce the cost of CubeSat swarm missions by decreasing the need for expensive sensors and actuators [3]. Together, these efforts signal a trajectory toward larger, more capable, and more autonomous multi-satellite systems.

To address these limitations, low-cost, rapidly reconfigurable alternatives have emerged, particularly drone-based spacecraft surrogates. Micro-quadrotors such as Bitcraze's Crazyflie have been used to emulate spacecraft relative motion governed by Clohessy–Wiltshire (CW) dynamics, enabling laboratory demonstrations of formation-keeping, rendezvous, and docking behaviors along natural motion trajectories and neural-network–generated trajectories [4]. These platforms leverage motion-capture systems, open-source flight stacks, and scalable swarm frameworks, bringing the cost per agent and per-experiment dramatically down while increasing experimental throughput. Recent demonstrations show multi-agent experiments that map orbital-scale trajectories to indoor, safety-compliant flight envelopes, providing an accessible bridge between purely simulated algorithms and high-fidelity, hardware-in-the-loop tests.

However, the experimental path to such autonomy remains fraught with cost and risk. High-fidelity spaceborne demonstrations are prohibitively expensive and offer limited iteration opportunities. Ground-based emulation has therefore become essential for de-risking algorithms in guidance, navigation, and control (GNC), relative motion planning, cooperative perception, and distributed decision-making. Traditional testbeds, such as air-bearing tables (planar and spherical), granite tilting facilities, and ISS-deployed platforms, have proven invaluable, but they remain expensive to build, operate, and maintain, and often require large lab footprints, specialized infrastructure, or access to scarce facilities. For instance, the long-running SPHERES program (ISS) enabled foundational work in formation acquisition, docking, and estimation, yet access is naturally limited and operations are resource-intensive [5]. Modern air-bearing testbeds provide quasi-frictionless dynamics but typically constrain motion to 2D planar translation with one rotational degree-of-freedom (DoF) or require complex setups [6].

Beyond micro-quadrotors, omni-directional multirotors have also been considered as a way to better approximate 6-DOF spacecraft behaviors on the ground [7]. However, these solutions are still exploratory and often bring increased mechanical complexity and integration overhead compared to micro-quadrotor surrogates.

979-8-3315-7360-7/26/$31.00 ©2026 IEEE

In this context, we introduce the *CubeSat Drone*: terrestrial 6-DoF test platform designed to emulate the dynamics of a free-flying CubeSat in microgravity. The system provides a low-friction, fully actuated testbed where advanced nonlinear controllers can be implemented and evaluated under realistic conditions. The system integrates a standard 3U CubeSat bus with actuated translation and attitude control, enabling realistic testing of autonomous guidance, navigation, and control (GNC) algorithms in terrestrial laboratory environments.

To achieve the desired autonomy goals, we design a hybrid controller for global asymptotic trajectory tracking for the CubeSat Drone. Taking into account the vehicle's configuration, we map desired force and torque commands to the rotation speed of each individual motor through a minimum-effort control allocation algorithm, that minimizes power consumption during flight. To the best of our knowledge, no other spacecraft emulator multirotor has implemented a globally stabilizing controller, which is a critical feature for singularity-free operation. The behavior of the closed-loop hybrid system is illustrated by means of simulations.

This paper is organized as follows. Section 2 presents the notation used throughout the paper, as well as important preliminaries on hybrid systems and hybrid control. Section 3 establishes the control problem, while Section 4 presents the controller design. Section 5 presents the vehicle's design and configuration and Section 6 presents the simulation results. Section 7 provides some conclusive remarks and the outline of future developments

2. Notation & Preliminaries

The 3-dimensional ball of radius $L \geq 0$ is represented by $L\mathbb{B} = \{\boldsymbol{x} \in \mathbb{R}^3 : |\boldsymbol{x}| \leq L\}$. The special orthogonal group is $\mathrm{SO}(3) = \{R \in \mathbb{R}^{3\times 3} : RR^\top = I_3, \det(R) = 1\}$. The identity matrix is $I_n \in \mathbb{R}^{n\times n}$. The function

$$S(\omega) := \begin{bmatrix} 0 & -\omega_3 & \omega_2 \\ \omega_3 & 0 & -\omega_1 \\ -\omega_2 & \omega_1 & 0 \end{bmatrix} \tag{1}$$

maps $\boldsymbol{\omega} := (\omega_1, \omega_2, \omega_3) \in \mathbb{R}^3$ to a skew-symmetric matrix such that $S(\boldsymbol{\omega})\boldsymbol{x} = \boldsymbol{\omega} \times \boldsymbol{x}$ for any $\boldsymbol{x} \in \mathbb{R}^3$.

Hybrid Systems

The class of hybrid systems used in this paper is thoroughly described in [8]. In this framework hybrid systems are defined using the data $\mathcal{H} = (C, F, D, G)$ with dynamics

$$\begin{aligned} \dot{x} &\in F(x) & x &\in C \\ x^+ &\in G(x) & x &\in D. \end{aligned}$$

where $C \subset \mathbb{R}^n$ is the flow set, $F : \mathbb{R}^n \rightrightarrows \mathbb{R}^n$ is the flow map, $D \subset \mathbb{R}^n$ is the jump set, and $G : \mathbb{R}^n \rightrightarrows \mathbb{R}^n$ is the jump map.

Solutions to a hybrid system $\mathcal{H} = (C, F, D, G)$ are defined on hybrid time domains, which are subsets of $\mathbb{R}_{\geq 0} \times \mathbb{N}$ that can be represented as a union of intervals of the form

$$\operatorname{dom} x = \bigcup_{j=0}^{J-1} ([t_j, t_{j+1}], j)$$

with $0 = t_0 \leq t_1 \leq t_2 \leq \ldots$ and $J \in \mathbb{N} \cup \{\infty\}$. A solution $x : \operatorname{dom} x \to \mathbb{R}^n$ is said to be maximal if it cannot be extended. A solution is complete if its domain is unbounded.

Definition 1 ([8, Definition 7.1]). *Let $\mathcal{H}$ be a hybrid system on $\mathbb{R}^n$. A compact set $\mathcal{A}$ is said to be:*

- *stable for $\mathcal{H}$ if for each $\epsilon > 0$ there exists $\delta > 0$ such that each solution x to $\mathcal{H}$ with $|x(0,0)|_\mathcal{A} \leq \delta$ satisfies $|x(t,j)|_\mathcal{A} \leq \epsilon$ for all $(t,j) \in \operatorname{dom} x$;*
- *pre-attractive for $\mathcal{H}$ if there exists $\mu > 0$ such that each solution x to $\mathcal{H}$ with $|x(0,0)|_\mathcal{A} \leq \mu$ is bounded and, if x is complete, then $\lim_{t+j\to\infty} |x(t,j)|_\mathcal{A} = 0$;*
- *pre-asymptotically stable for $\mathcal{H}$ if it is both stable and pre-attractive for $\mathcal{H}$.*

If each maximal solution to $\mathcal{H}$ is complete, then the prefix "pre-" can be removed from the above definitions.

Synergistic Potential Functions on $SO(3)$

Synergistic potential functions on $SO(3)$ are instrumental to global asymptotic stabilization on $SO(3)$ and are defined as follows (cf. [9]).

Definition 2. *A function $U : SO(3) \to \mathbb{R}$ is said to be a* potential function on $SO(3)$ *if it is continuously differentiable and positive definite relative to I_3.*

Definition 3. *The set of critical points of a potential function $U : SO(3) \to \mathbb{R}$ is defined as*

$$\operatorname{crit} U = \{R \in SO(3) : R^\top \nabla U(R) = \nabla U(R)^\top R\}.$$

Definition 4. *Given a finite set $\mathcal{Q}$, a collection of potential functions $\mathscr{U} := \{U_q\}_{q\in\mathcal{Q}}$ on $SO(3)$ is said to be a synergistic if*

1. There exists a unique nonempty subset $P \subset \mathcal{Q}$ such that $(R, q) \mapsto U_q(R)$ is positive definite relative to

$$\mathcal{A} := I_3 \times P;$$

2. The synergy gap

$$\mu(R, q) := U_q(R) - \min_{h\in\mathcal{Q}} U_h(R) > 0$$

is greater than zero for each $(R, q) \in (\mathcal{E} \cup \mathcal{B}) \setminus \mathcal{A}$, where $\mathcal{B} := \{I_3\} \times \mathcal{Q}$, and

$$\mathcal{E} := \{(R, q) \in SO(3) \times \mathcal{Q} : R \in \operatorname{crit} U_q\}.$$

If, in addition, the synergy gap exceeds a positive constant $\delta > 0$, then we say that $\mathscr{U}$ is synergistic with gap exceeding δ.

3. Problem Statement

Rigid-Body Dynamics

Let $\boldsymbol{p} \in \mathbb{R}^3$ denote the position of the vehicle's center of mass in an inertial frame $\{\mathcal{I}\}$, $\boldsymbol{v}$ its linear velocity, $R \in \mathrm{SO}(3)$ the rotation matrix that maps vectors in the body-fixed frame to the inertial frame, and $\boldsymbol{\omega} \in \mathbb{R}^3$ the angular velocity expressed in the body frame. The translational and rotational equations of motion are

$$\begin{aligned} \dot{\boldsymbol{p}} &= \boldsymbol{v}, \\ m\dot{\boldsymbol{v}} &= m\boldsymbol{g} + R\boldsymbol{F}, \\ \dot{R} &= RS(\boldsymbol{\omega}), \\ J\dot{\boldsymbol{\omega}} &= \boldsymbol{M} - \boldsymbol{\omega} \times J\boldsymbol{\omega}, \end{aligned} \tag{2}$$

where m is the mass, $\boldsymbol{g}$ is the gravity vector, $J \in \mathbb{R}^{3\times 3}$ is the tensor of inertia, $\boldsymbol{F} \in \mathbb{R}^3$ is the net force expressed in the body frame, and $\boldsymbol{M} \in \mathbb{R}^3$ is the net moment (see e.g. [10]).

Actuation Model

Ten identical propellers are located at positions $\boldsymbol{r}_i \in \mathbb{R}^3$ and produce thrust along unit vectors $\boldsymbol{u}_i$ for each $i \in \mathcal{N} := \{1, 2, \ldots, 10\}$. The i-th propeller's rotation speed $\Omega_i \in \mathbb{R}$ generates a force

$$f_i = \rho\, d^4\, C_T\ |\Omega_i|\, \Omega_i$$

where ρ is atmospheric density, d is the propeller's diameter, and C_T is the coefficient of thrust. Each propeller also induces a moment about its axis of rotation

$$m_i = -\rho d^5 C_Q\, d_i\ |\Omega_i|\, \Omega_i,$$

where C_Q is the coefficient of torque (cf. [11]), and $d_i = 1$ if the propeller's rotation is aligned with the thrust (in a right-handed sense), and $d_i = -1$ otherwise. It follows that the net force and moment acting on the vehicle are

$$\boldsymbol{F} = \sum_{i=1}^{10} f_i \boldsymbol{u}_i = k_f \sum_{i=1}^{10} |\Omega_i|\, \Omega_i \boldsymbol{u}_i, \tag{3a}$$

$$\begin{aligned}\boldsymbol{M} &= \sum_{i=1}^{10} \big(\boldsymbol{r}_i \times f_i \boldsymbol{u}_i + m_i \boldsymbol{u}_i\big) \\ &= \sum_{i=1}^{10} \big(k_f S(\boldsymbol{r}_i) - k_m d_i\big) \boldsymbol{u}_i\, |\Omega_i|\, \Omega_i,\end{aligned} \tag{3b}$$

respectively, where $k_f = \rho d^4 C_T$ and $k_m = \rho d^5 C_Q$. Defining

$$\boldsymbol{\Omega} := \begin{bmatrix} |\Omega_1|\, \Omega_1 & \ldots & |\Omega_{10}|\, \Omega_{10} \end{bmatrix}^\top \tag{4}$$

as the vector of signed squared propeller speeds, we can rewrite (3) as $\begin{bmatrix} \boldsymbol{F}^\top & \boldsymbol{M}^\top \end{bmatrix}^\top = T\boldsymbol{\Omega}$ with

$$T = \begin{bmatrix} k_f \boldsymbol{u}_1 & \ldots & k_f \boldsymbol{u}_{10} \\ (k_f S(\boldsymbol{r}_1) - k_m d_1)\, \boldsymbol{u}_1 & \ldots & (k_f S(\boldsymbol{r}_{10}) - k_m d_{10})\, \boldsymbol{u}_{10} \end{bmatrix}. \tag{5}$$

Control Objective

Given $L_v, L_\omega > 0$ and a twice-differentiable reference trajectory $t \mapsto (\boldsymbol{p}_d(t), R_d(t)) \in \mathbb{R}^3 \times SO(3)$ satisfying

$$\dot{\boldsymbol{p}}_d(t) = \boldsymbol{v}_d(t), \qquad \dot{\boldsymbol{v}}_d(t) \in L_v \mathbb{B} \tag{6a}$$

$$\dot{R}_d(t) = R_d(t) S(\boldsymbol{\omega}_d(t)), \qquad \dot{\boldsymbol{\omega}}_d(t) \in L_\omega \mathbb{B} \tag{6b}$$

for each $t \geq 0$, we define the tracking errors as follows:

$$\begin{aligned} &\boldsymbol{p}_e(t) := \boldsymbol{p}(t) - \boldsymbol{p}_d(t), \quad \boldsymbol{v}_e(t) := \boldsymbol{v}(t) - \dot{\boldsymbol{p}}_d(t), \\ &R_e(t) := R_d(t)^\top R(t) \quad\ \ \boldsymbol{\omega}_e(t) := \boldsymbol{\omega}(t) - R_e(t)^\top \boldsymbol{\omega}_d(t) \end{aligned} \tag{7}$$

for each $t \geq 0$. Differentiating (7) with respect to time and using (2) and (6), we obtain the error dynamics

$$\begin{aligned} \dot{\boldsymbol{p}}_e &= \boldsymbol{v}_e \\ m\dot{\boldsymbol{v}}_e &= m\boldsymbol{g} + R_d R_e \boldsymbol{F} - m\ddot{\boldsymbol{p}}_d, \\ \dot{R}_e &= R_e S(\boldsymbol{\omega}_e), \\ J\dot{\boldsymbol{\omega}}_e &= \Sigma(R_e, \boldsymbol{\omega}_e, \boldsymbol{\omega}_d)\boldsymbol{\omega}_e + \boldsymbol{M} + S(JR_e^\top \boldsymbol{\omega}_d) R_e^\top \boldsymbol{\omega}_d - R_e^\top \dot{\boldsymbol{\omega}}_d \end{aligned} \tag{8}$$

with

$$\begin{aligned}\Sigma(R_e, \boldsymbol{\omega}_e, \boldsymbol{\omega}_d) = S(J\boldsymbol{\omega}_e) + S(JR_e^\top \boldsymbol{\omega}_d) \\ - S(R_e^\top \boldsymbol{\omega}_d) J - JS(R_e^\top \boldsymbol{\omega}_d),\end{aligned}$$

which is a skew-symmetric matrix.

Problem Statement. *Design a controller with output* $(\boldsymbol{F}, \boldsymbol{M})$ *that globally asymptotically stabilizes the identity for* (8)*. Furthermore, solve the control allocation problem to find the vector of propeller speeds* $\boldsymbol{\Omega}$ *that generates* $(\boldsymbol{F}, \boldsymbol{M})$*.*

4. Controller Design

The controller design followed in this paper extends the control strategy proposed in [9] from attitude tracking to full pose tracking. The proposed controller is based on rotation matrix feedback combined with a minimum effort control allocation strategy. Rotation matrix feedback is preferred over other attitude representations, such as Euler angles or unit-quaternions, because it is free of singularities or ambiguities. In addition, [9] provides us with a simple way of achieving global asymptotic stability through hybrid control, which is explained in the following sections.

Nominal Feedback Law Design

Almost global attitude tracking is achieved through the appropriate design of a Lyapunov function and feedback pair. In this direction, we consider the following candidate Lyapunov function:

$$V(R_e, \boldsymbol{\omega}_e) = U_0(R_e) + \frac{1}{2}\boldsymbol{\omega}_e^\top J \boldsymbol{\omega}_e,$$

where

$$U_0(R_e) = \mathrm{trace}(A(I_3 - R_e)) \tag{9}$$

is a modified trace function with $A \in \mathbb{R}^{3\times 3}$ positive definite. The time-derivative of V along the trajectories of (8) is

$$\begin{aligned}\dot{V}(R_e, \boldsymbol{\omega}_e) = -\boldsymbol{\omega}_e^\top S^{-1}(R_e^\top A - AR_e) \\ +\boldsymbol{\omega}_e^\top (\Sigma(R_e, \boldsymbol{\omega}_e, \boldsymbol{\omega}_d)\boldsymbol{\omega}_e + \boldsymbol{M} + S(JR_e^\top \boldsymbol{\omega}_d) R_e^\top \boldsymbol{\omega}_d - R_e^\top \dot{\boldsymbol{\omega}}_d)\end{aligned}$$

where S^{-1} is the inverse of the skew-symmetric map (1). Defining the feedback law as

$$\boldsymbol{M} = S^{-1}(R_e^\top A - AR_e) - K_\omega \boldsymbol{\omega}_e - S(JR_e^\top \boldsymbol{\omega}_d) R_e^\top \boldsymbol{\omega}_d + R_e^\top \dot{\boldsymbol{\omega}}_d, \tag{10}$$

with $K_\omega \in \mathbb{R}^{3\times 3}$ positive definite, we obtain

$$\dot{V}(R_e, \boldsymbol{\omega}_e) = -\boldsymbol{\omega}_e^\top K_\omega \boldsymbol{\omega}_e \leq 0.$$

Stabilization for the tracking error dynamics of the position subsystem is achieved through a standard PD controller:

$$\boldsymbol{F} = -R_e^\top R_d^\top (K_p \boldsymbol{p}_e - K_v \boldsymbol{v}_e - m\boldsymbol{g}) + m\ddot{\boldsymbol{p}}_d, \tag{11}$$

with positive definite gains $K_p, K_v \in \mathbb{R}^{3\times 3}$.

Complementary Feedback Law Design

The feedback laws (10) and (11) do not guarantee global asymptotic stability due to the topological obstruction of SO(3) (cf. [12]). In particular, U_0 has four critical points, one corresponding to the desired equilibrium $R_e = I_3$ and three undesired equilibria corresponding to rotations of 180° about

the eigenvectors of A (cf. [9]). To overcome this limitation, a complementary feedback law is designed by selecting a different modified trace function U_1 with the same structure as U_0 but with different critical points, namely:

$$U_1(R_e) = \alpha + \epsilon U_0(P^\top R_e), \tag{12}$$

where $\alpha, \epsilon > 0$ and $P \in SO(3)$ are controller parameters. The feedback law associated with U_1 is

$$\begin{aligned}\boldsymbol{M} = \epsilon S^{-1}(R_e^\top PA - AP^\top R_e) - K_\omega \boldsymbol{\omega}_e \\ - S(JR_e^\top \boldsymbol{\omega}_d)R_e^\top \boldsymbol{\omega}_d + R_e^\top \dot{\boldsymbol{\omega}}_d.\end{aligned} \tag{13}$$

The values of α, ϵ and P are chosen in combination with the Hybrid Supervisor described in the next section so as to avoid undesired equilibria. The force input remains unchanged relative to (11).

Hybrid Supervisor

The Hybrid Supervisor proposed in [9] continuously evaluates the difference between the current value of $U_q(R_e)$ and $U_{1-q}(R_e)$ and switches from q to $1-q$ whenever the difference exceeds a threshold $\delta > 0$. The switching logic is defined by the hybrid system $\mathcal{H} := (C, F, D, G)$ with state $(\xi_d, \xi_e, q) \in \mathcal{S}_d \times \mathcal{S}_e \times \mathcal{Q}$ with $\xi_{d,e} := (\boldsymbol{p}_{d,e}, \boldsymbol{v}_{d,e}, R_{d,e}, \boldsymbol{\omega}_{d,e})$, $\mathcal{S}_d = \mathcal{S}_e := \mathbb{R}^3 \times \mathbb{R}^3 \times SO(3) \times \mathbb{R}^3$ and $\mathcal{Q} := \{0, 1\}$, as follows:

$$\begin{aligned}\dot{q} &= 0 && (\xi_d, \xi_e, q) \in C \\ q^+ &= 1 - q && (\xi_d, \xi_e, q) \in D\end{aligned}$$

with output $(\boldsymbol{F}, \boldsymbol{M}) = (\kappa_F(\xi_d, \xi_e), \kappa_M(\xi_d, \xi_e, q))$ where κ_F is defined by (11), $\kappa_M xi_d, \xi_e, 0)$ is given by (10), $\kappa_M xi_d, \xi_e, 1)$ is given by (13). The flow and jump sets are

$$\begin{aligned}C &= \{\xi \in \mathcal{S} : U_q(R_e) - U_{1-q}(R_e) \leq \delta\}, \\ D &= \{\xi \in \mathcal{S} : U_q(R_e) - U_{1-q}(R_e) \geq \delta\}.\end{aligned}$$

Closed-Loop Hybrid System

The closed-loop hybrid system is given by

$$\begin{aligned}
\dot{\boldsymbol{p}}_d &= \boldsymbol{v}_d & \boldsymbol{p}_d^+ &= \boldsymbol{p}_d \\
\dot{\boldsymbol{v}}_d &\in L_v \mathbb{B} & \boldsymbol{v}_d^+ &= \boldsymbol{v}_d \\
\dot{R}_d &= R_d \, \mathrm{S}(\boldsymbol{\omega}_d) & R_d^+ &= R_d \\
\dot{\boldsymbol{\omega}}_d &\in L_\omega \mathbb{B} & \boldsymbol{\omega}_d^+ &= \boldsymbol{\omega}_d \\
\dot{\boldsymbol{p}}_e &= \boldsymbol{v}_e & \boldsymbol{p}_e^+ &= \boldsymbol{p}_e \\
m\dot{\boldsymbol{v}}_e &= m\boldsymbol{g} + R_d R_e \kappa_F(\xi_d, \xi_e) - m\ddot{\boldsymbol{p}}_d & \boldsymbol{v}_e^+ &= \boldsymbol{v}_e \\
\dot{R}_e &= R_e \, \mathrm{S}(\boldsymbol{\omega}_e) & R_e^+ &= R_e \\
J\dot{\boldsymbol{\omega}}_e &= \Sigma(R_e, \boldsymbol{\omega}_e, \boldsymbol{\omega}_d)\, \boldsymbol{\omega}_e + \kappa_M(\xi_d, \xi_e, q) & \boldsymbol{\omega}_e^+ &= \boldsymbol{\omega}_e \\
&\quad + \mathrm{S}\big(JR_e^\top \boldsymbol{\omega}_d\big)\, R_e^\top \boldsymbol{\omega}_d - R_e^\top \dot{\boldsymbol{\omega}}_d & & \\
\dot{q} &= 0 & q^+ &= 1 - q \\
&\quad (\xi_d, \xi_e, q) \in C & &\quad (\xi_d, \xi_e, q) \in D
\end{aligned} \tag{14}$$

to which the following result applies.

Proposition 1. *Suppose that the reference trajectory $t \mapsto \xi_d(t)$ is a complete solution to* (6) *that belongs to some compact set $\mathcal{A}_d$ for all $t \geq 0$. Given $\mathcal{Q} := \{0, 1\}$, U_0 in* (9) *and U_1 in* (12)*, if $\mathscr{U} := \{U_q\}_{q \in \mathcal{Q}}$ is synergistic with gap exceeding $\delta > 0$, then the compact set*

$$\begin{aligned}\mathcal{A} := \{(\xi_d, \xi_e, q) \in \mathcal{S}_d \times \mathcal{S}_e \times \mathcal{Q} : \xi_d \in \mathcal{A}_d, \\ \xi_e = (0, 0, I_3, 0), q = 0\}\end{aligned} \tag{15}$$

is globally asymptotically stable for the hybrid system (14).

Proof: The proof follows from Theorem 2 in [9] with a slight adaptation to consider the position and velocity tracking errors in addition to the angular tracking errors. The details are omitted for brevity.

Minimum-Effort Control Allocation

The control allocation problem consists of finding the vector of propeller speeds $\boldsymbol{\Omega} \in \mathbb{R}^{10}$, defined in (4), that generates the desired force and moment $(\boldsymbol{F}, \boldsymbol{M})$ given by the feedback laws κ_F and κ_M. We say that the control is minimum effort because it minimizes $|\boldsymbol{\Omega}|^2$ subject to the constraint that the desired force and moment are generated, i.e.,

$$\boldsymbol{\Omega} = \arg\min \left\{ |\boldsymbol{\Omega}|^2 : T\boldsymbol{\Omega} = \begin{bmatrix} \kappa_F(\xi_d, \xi_e) \\ \kappa_M(\xi_d, \xi_e, q) \end{bmatrix} \right\}, \tag{16}$$

where T is given in (5). If T is full rank, then there is a unique solution to (16) given by

$$\boldsymbol{\Omega} = T^\top \left(TT^\top\right)^{-1} \begin{bmatrix} \kappa_F(\xi_d, \xi_e) \\ \kappa_M(\xi_d, \xi_e, q) \end{bmatrix}. \tag{17}$$

5. Drone Testbed

The CubeSat Drone testbed platform includes 10 different thruster systems (Fig. 1), two per each elongated side of the CubeSat (T1 to T8) and one thruster on the sides of the CubeSat (T9 and T10). M1 and M2 are directed towards the +Z axis of the body frame. T3 and T4 are directed towards the +Y axis. T5 and T6 are directed towards the -Z axis. T7 and T8 are directed towards the -Y axis. T9 is directed towards +X and T10 is directed in the -X axis.

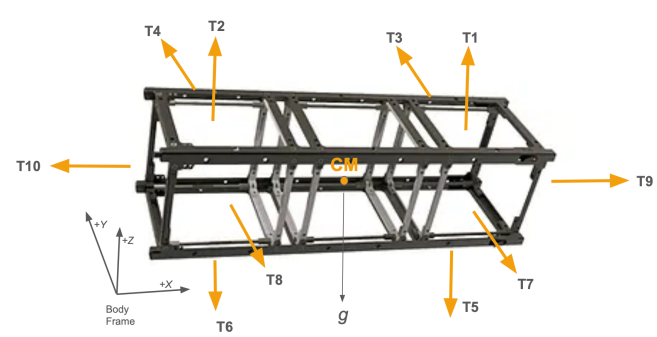

Figure 1. 3U CubeSat Drone Configuration with ten thrusters T1 to T10. Each motor produces a force and a moment that are used to control the drone.

Thruster Geometry and Directions.

All thruster locations are defined in the body-fixed frame $\{B\}$ with origin at the geometric center of the vehicle (CM in Fig

Table 1. Positions coordinates for each Thruster (in cm)

	x	y	z
$\boldsymbol{r}_1$	10	0	5
$\boldsymbol{r}_2$	-10	0	5
$\boldsymbol{r}_3$	10	5	0
$\boldsymbol{r}_4$	-10	5	0
$\boldsymbol{r}_5$	10	0	-5
$\boldsymbol{r}_6$	-10	0	-5
$\boldsymbol{r}_7$	10	-5	0
$\boldsymbol{r}_8$	-10	-5	0
$\boldsymbol{r}_9$	15	0	0
$\boldsymbol{r}_{10}$	-15	0	0

Table 2. Thruster Direction Unit Vectors

	x	y	z
$\boldsymbol{u}_1$	0	0	1
$\boldsymbol{u}_2$	0	0	1
$\boldsymbol{u}_3$	0	1	0
$\boldsymbol{u}_4$	0	1	0
$\boldsymbol{u}_5$	0	0	-1
$\boldsymbol{u}_6$	0	0	-1
$\boldsymbol{u}_7$	0	-1	0
$\boldsymbol{u}_8$	0	-1	0
$\boldsymbol{u}_9$	1	0	0
$\boldsymbol{u}_{10}$	-1	0	0

1). The $+X$ axis is along the long CubeSat rail (forward), $+Y$ is "the 'port" (left when looking forward), and $+Z$ is the zenith (away from the lab floor). Each thruster T_i is specified by a position vector $\boldsymbol{r}_i = [x_i, y_i, z_i]^\top$ (m) from the origin to the propeller thrust line, coordinates are defined in Table 1. The thrust direction unit vectors $\boldsymbol{u}_i = [u_{xi}, u_{yi}, u_{zi}]^\top$ (which are dimensionless) are pointing along the applied force (see Eq. 3a) and are defined in Table 2.

Propellers and Motors

Each thruster system is composed of a 5 inch drone propeller and brushless motor. The propellers and motors for this platform are chosen from the data collected via the "Tyto Robotics motor and propeller database" [13]. The propeller selected is the HQ Prop 5043 which can be used in bidirectional thrust configurations. The thrust measured for this propeller is shown in "Fig. 4". The torque is shown in "Fig. 6" and the Mechanical Power in "Fig. 3".

The HQ Prop 5043 (see "Fig. 2" and Table 3) refers to the HQProp 5X4.3X3 V2S, a specific model of a three-blade, 5-inch propeller designed primarily for FPV drones. The "5043" in its name signifies a 5-inch diameter and a 4.3-inch pitch, while "V2S" denotes its version (Version 2S), and the "3X3" indicates the three blades. This lightweight, durable Poly Carbonate propeller is known for providing smooth, responsive, and powerful flight with reduced noise.

The 5043 propeller has been tested by Maier [14] for thurst inversion providing upwards of 3.5 N on both directions, for speeds of 20k RPM. The battery used is the Floureon Lithium-polymer battery with 3 cells in series (3S) providing nominally 11.1 V with a 1500 mA.h capactity and 35C of discharge rate.

The motor selected is the brushless DC motor, DYS Samguk Series Wei 2207 2600kv Motor. The motor specifications are

Figure 2. HQ Freestyle Prop 5X4.3X3V2S Poly Carbonater

Table 3. HQ Freestyle Prop 5X4.3X3V2S

Parameter	**Value**
Propeller Diameter:	5 inch
Pitch :	4.3
Blades :	3
Material :	Poly Carbonate
Weight :	3.8g
Hub Diameter :	12.8mm
Hub Thickness:	6.5mm
Shaft :	5mm

listed in Table 4.

Figure 3. DYS Samguk Series Wei 2207 2600kv Motor

Each propeller+motor system produces thrust and torques. We use the following nomenclature to define the angular velocity ω in revolutions per minute (RPM). n is the revolutions per second ($n = \omega/60$). D is the diameter of the propeller in meters ($D = 0.127m$) and the density at the surface level is $\rho = 1.225kg/m^3$.

Electric Speed Controllers (ESC)

The KISS ESC 2-5S 24A Race Edition is a 32-Bit-ARM-Cortex MCU @ 48Mhz Motor Controller. This ESC includes features such as current measurement/current limiting, temperature protection,and telemetry. Telemetry capability

Table 4. DYS Samguk Series Wei 2207 2600kv Motor

Parameter	**Value**
KV:	2600
Stator Diameter:	22.0 mm
Stator Length:	7.0 mm
Shaft Diameter:	M5
Motor Dimensions(Dia.*Len):	ϕ27.7 $\times$ 18.2 mm
Weight (g):	34.7 g
No.of Cells(Lipo):	3-4 S
Max Continuous current(A):	44.2 A
Max Continuous Power(W):	704.2 W
Internal resistance:	0.05 Ω

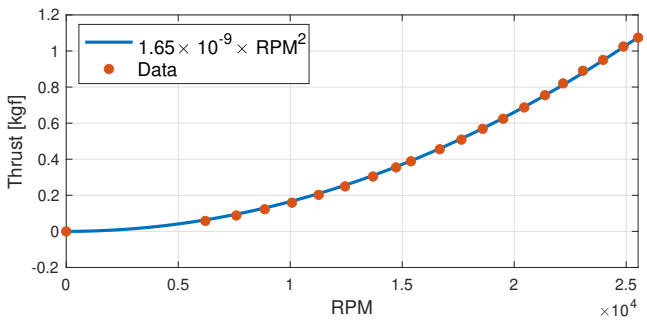

Figure 4. Thrust in kg.f for the HQ Prop 5043 [13]. Least-squares regression for the model (3a) yielded $k_f \approx 1.65 \times 10^{-9}$ [kgf/RPM^2] for a Mean Relative Error (MRE) of approximately 6.9%.

includes voltage, current, temperature and rotor speed (rpm).

Mass Budget

The mass budget for the CubeSat Drone Testbed was allocated to balance functionality, structural integrity, and maneuverability within the constraints of a 3U CubeSat bus frame. The total mass includes contributions from the primary structure, avionics, power subsystem, actuation and propulsion mechanisms. Special consideration was given to the integration of actuated translation and attitude control hardware, which increases the overall mass relative to a standard CubeSat but is essential for enabling full six-degree-of-freedom (6-DoF) emulation in laboratory environments. Each subsystem was designed to remain within realistic CubeSat and Drone mass limits while providing sufficient margin to accommodate additional thrusters and future upgrades. The resulting mass budget ensures that the platform remains scalable, transportable, and cost-effective while supporting robust experimental validation of guidance, navigation, and control (GNC) algorithms. The total mass is 893 g as shown in Table 5.

6. Simulation Results

One of the key objectives in the development of a CubeSat drone is to be able to test key features of a CubeSat in the lab. To assess the feasibility of the proposed testbed in carrying out such experiments, we have considered that the reference

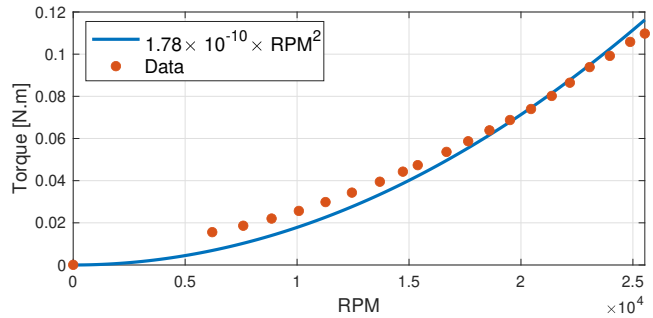

Figure 5. Torque in N.m for the HQ Prop 5043 [13]. Least-squares regression for the torque model (3b) yielded $k_m \approx 1.78 \times 10^{-9}$ [N.m/RPM^2] for a Mean Relative Error (MRE) of approximately 18.3%.

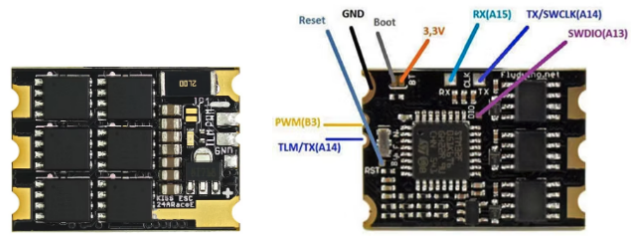

Figure 6. KISS ESC 2-5S 24A Race Edition - 32bit brushless Motor Ctrl

Table 5. Mass Table

Item	**Units**	**Mass (g)**	**Total (g)**
3U Structure	1	160	160
Propelers	10	3.7	37
Motors	10	35	350
Battery	1	125	125
Speed controllers (ESC)	10	4	40
Flight Controller	1	50	50
Wiring, fasteners, misc	1	50	50
Margin			81
		Total	893

trajectory is given by the Clohessy-Wiltshire equations:

$$\begin{aligned} \ddot{x}_d &= 3n^2 x_d + 2n\dot{y}_d \\ \ddot{y}_d &= -2n\dot{x}_d \\ \ddot{z}_d &= -n^2 z_d \end{aligned} \tag{18}$$

with $\boldsymbol{p}_d := (x_d, y_d, z_d)$ being the desired position, $\boldsymbol{v}_d := (\dot{x}_d, \dot{y}_d, \dot{z}_d)$ the desired linear velocity, and $n = \sqrt{\mu/a^3}$ where $\mu \approx 3.986 \times 10^{14}\,\mathrm{m}^3\,\mathrm{s}^{-2}$ is the gravitational parameter of Earth and a is the semi-major axis of the target object which, for the simulations presented here, we have considered to correspond to a satellite orbiting at an altitude of $550\,\mathrm{km}$. Since the origin is stable for (18), the assumptions on the reference trajectory established in Section 3 are satisfied. To further test the capabilities and limitations of the proposed testbed, we considered that the attitude reference is

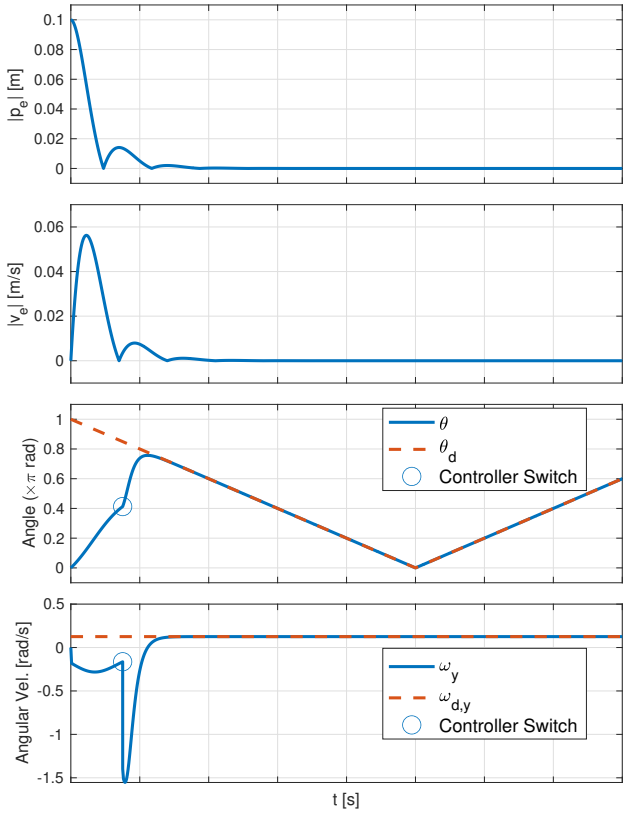

Figure 7. From top to bottom, the figure represents the evolution with time of: the norm of the position tracking error; the norm of the linear velocity tracking error; the rotation angle of the vehicle and of the reference, represented by $\theta \in [0, \pi]$ and $\theta_d \in [0, \pi]$, respectively; the angular velocity along the body's y-axis.

the solution to (6b) with

$$\omega_d(t) = \left(0, \frac{4\pi}{100}, 0\right)$$

for each $t \geq 0$.

Selecting controller parameters as in [9, Table I], then $\mathscr{U} := \{U_q\}_{q \in \mathcal{Q}}$ is synergistic and the results in Proposition 1 apply, rendering $\mathcal{A}$ in (15) globally asymptotically stable for the closed-loop hybrid system. Considering the physical parameters of the CubeSat Drone presented in Section 5, we obtain the simulation results presented in Fig. 7 for initial conditions

$$\xi_{d,0} = \left(\begin{bmatrix} 1 \\ 0 \\ 0 \end{bmatrix}, \begin{bmatrix} 0 \\ 0 \\ 0 \end{bmatrix}, \begin{bmatrix} -1 & 0 & 0 \\ 0 & 1 & 0 \\ 0 & 0 & -1 \end{bmatrix}, \begin{bmatrix} 0 \\ \frac{4\pi}{100} \\ 0 \end{bmatrix} \right)$$

$$\boldsymbol{p}_0 = \begin{bmatrix} 0.9 \\ 0 \\ 0 \end{bmatrix}, \ \boldsymbol{v}_0 = 0, \ R_0 = I_3, \ \boldsymbol{\omega}_0 = 0, \ q_0 = 1.$$

It is possible to verify that the vehicle is able to track the reference trajectory asymptotically, as the tracking errors converge to 0.

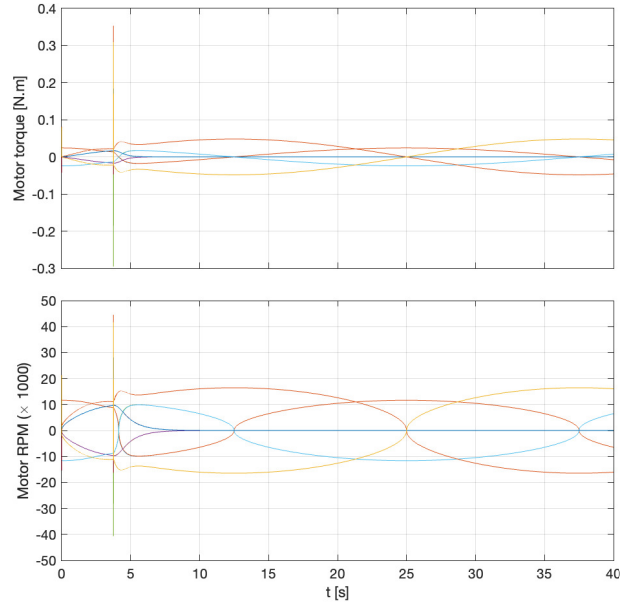

Figure 8. From top to bottom, the figure represents the evolution with time of each motor's torque and rotations per minute, respectively.

In Figure 8, we represent the evolution with time of each motor's torque and the corresponding rotations per minute (RPMs). It is possible to verify that, for the most part, both the torque and the RPMs remain within reasonable bounds, with the exception being the moment in which controller switching occurs. Future work will focus on smoothing motor commands so as to improve the transient response after controller switching.

7. Conclusions

This paper presented the *CubeSat Drone*, a six-degree-of-freedom (6-DoF) experimental aerial platform that emulates free-flying CubeSat dynamics and enables realistic validation of guidance, navigation, and control (GNC) algorithms in the lab. Our design couples an over actuated multirotor architecture with a global, hybrid nonlinear controller for full pose tracking and a minimum–effort control allocation scheme. Within the proposed framework, we established global asymptotic trajectory tracking for the closed-loop hybrid system.

Simulation studies using Clohessy–Wiltshire (CW)–based reference trajectories demonstrated global asymptotic pose tracking and highlighted the role of the hybrid supervisor in avoiding topological obstructions on $\mathrm{SO}(3)$. The allocation strategy mapped commanded wrench inputs to signed squared rotor speeds while respecting the vehicle's geometry, illustrating feasible thrust/torque distributions across the ten-propeller configuration. Taken together, these results indicate that the platform can support agile maneuvers and coordinated behaviors relevant to formation keeping and reconfiguration in multi-satellite scenarios.

Future work will focus on smoothing the control inputs to avoid actuator saturation, the implementation of adaptive

control techniques to deal with uncertainty, and the practical implementation of the CubeSat Drone.

ACKNOWLEDGEMENTS

The work of P. Casau was funded by the PRR – Plano de Recuperação e Resiliência and by the NextGenerationEU funds at Universidade de Aveiro, through the scope of the Agenda for Business Innovation "New Space Portugal" (Project no. 11 with the application C644936537-00000046).

REFERENCES

[1] C. Burkhard and S. Weston, "The Evolution of CubeSat Spacecraft Platforms," in *AVT-336 Specialist Meeting*, 2021.

[2] N. Alem, T. G. Hendriks, J. Alvarellos, P. G. Levin, and A. Dono, "Mission Design and Flight Dynamics Operations for the Starling Swarm Technology Demonstration," in *AAS/AIAA Astrodynamics Specialist Conference*, no. August, 2025.

[3] M. Holliday, R. Ticknor, J. Stupl, R. Hunter, P. Fisch, I. S. Sow, J. Willis, and Z. Manchester, "The PY4 Mission : A Low-Cost Demonstration of CubeSat Formation-Flying Technologies," in *38th Annual Small Satellite Conference*, 2024.

[4] A. De La Barcena, C. Rhodes, J. McCarroll, M. Cescon, and K. L. Hobbs, "Testing Spacecraft Formation Flying with Crazyflie Drones as Satellite Surrogates," in *IEEE Aerospace Conference Proceedings*. IEEE, 2024.

[5] S. Mohan, A. Saenz-Otero, S. Nolet, D. W. Miller, and S. Sell, "SPHERES flight operations testing and execution," *Acta Astronautica*, vol. 65, no. 7-8, pp. 1121–1132, 2009.

[6] J. D. Wapman, D. C. Sternberg, K. Lo, M. Wang, L. Jones-Wilson, and S. Mohan, "Jet Propulsion Laboratory Small Satellite Dynamics Testbed Planar Air-Bearing Propulsion System Characterization," *Journal of Spacecraft and Rockets*, vol. 58, no. 4, pp. 954–971, 2021. [Online]. Available: https://doi.org/10.2514/1.A34857

[7] A. Barari and P. Ferguson, "Dynamic Feasibility of Space Environment Emulation using an Omnidirectional Drone," in *2021 IEEE International Conference on Wireless for Space and Extreme Environments*. IEEE, 2021, pp. 66–70.

[8] R. Goebel, R. Sanfelice, and A. Teel, *Hybrid Dynamical Systems: Modeling, Stability, and Robustness*. Princeton University Press, 2012.

[9] C. G. Mayhew and A. R. Teel, "Synergistic Hybrid Feedback for Global Rigid-Body Attitude Tracking on SO(3)," *IEEE Transactions on Automatic Control*, vol. 58, no. 11, pp. 2730–2742, 2013.

[10] F. Bullo and A. D. Lewis, *Geometric Control of Mechanical Systems*. New York, NY: Springer, 2005.

[11] R. Von Mises, *Theory of flight.* Dover Publications, 1959.

[12] S. P. Bhat and D. S. Bernstein, "A topological obstruction to continuous global stabilization of rotational motion and the unwinding phenomenon," *Systems and Control Letters*, vol. 39, no. 1, pp. 63–70, 2000.

[13] R. Hessler, "Hq 5043 test data," Mar 2019. [Online]. Available: https://database.tytorobotics.com/tests/79e/dys-samguk-wei-hq-5043

[14] M. Maier, "Bidirectional thrust for multirotor mavs with fixed-pitch propellers," in *2018 IEEE/RSJ International Conference on Intelligent Robots and Systems (IROS)*. IEEE, 2018, pp. 1–8.

BIOGRAPHY

Miguel Nunes (Member, IEEE) received his degree in Aerospace Engineering from Instituto Superior Técnico, Lisbon, Portugal and Ph.D. from the Univeristy of Hawai'i at Mānoa in 2016. He is currently the Deputy Director of the Hawai'i Space Flight Laboratory and Assistant Researcher for the Hawai'i Institute of Geophysics and Planetology. He has worked in leading roles on small satellites and instrumentation development for: ESA ESEO, HiakaSat, Neutron-1, NASA HyTI, Artemis CubeSat Kit, HyTI-2, Lunar HyTI, EPSCoR C3M, AERIS and Neutron-2. His research focuses on applications in science instrumentation (hyperspectral thermal imagers and radiation detectors), distributed space systems, model-based systems engineering, guidance navigation and control, and autonomous space operations.

Pedro Casau (Member, IEEE) received the B.Sc. degree in aerospace engineering, the M.Sc. degree in aerospace engineering, and the Ph.D. degree in electrical and computer engineering from Instituto Superior Técnico, Lisbon, Portugal, in 2008, 2010, and 2016, respectively. He was a Research Assistant with the University of Macau, Macau, China, and a Research Fellow with the Institute for Systems and Robotics, Lisbon. He is currently an Assistant Professor with the Department of Electronics, Telecommunications and Informatics, University of Aveiro, Aveiro, Portugal, where he is also a Researcher with the Instituto de Telecomunicações. He participated in several national and international research projects on guidance, navigation, and control of unmanned air vehicles and satellites. His current research interests include nonlinear control, hybrid control systems, networked control systems, event-triggered control, vision-based control systems, controller design for autonomous air vehicles, and spacecraft systems.