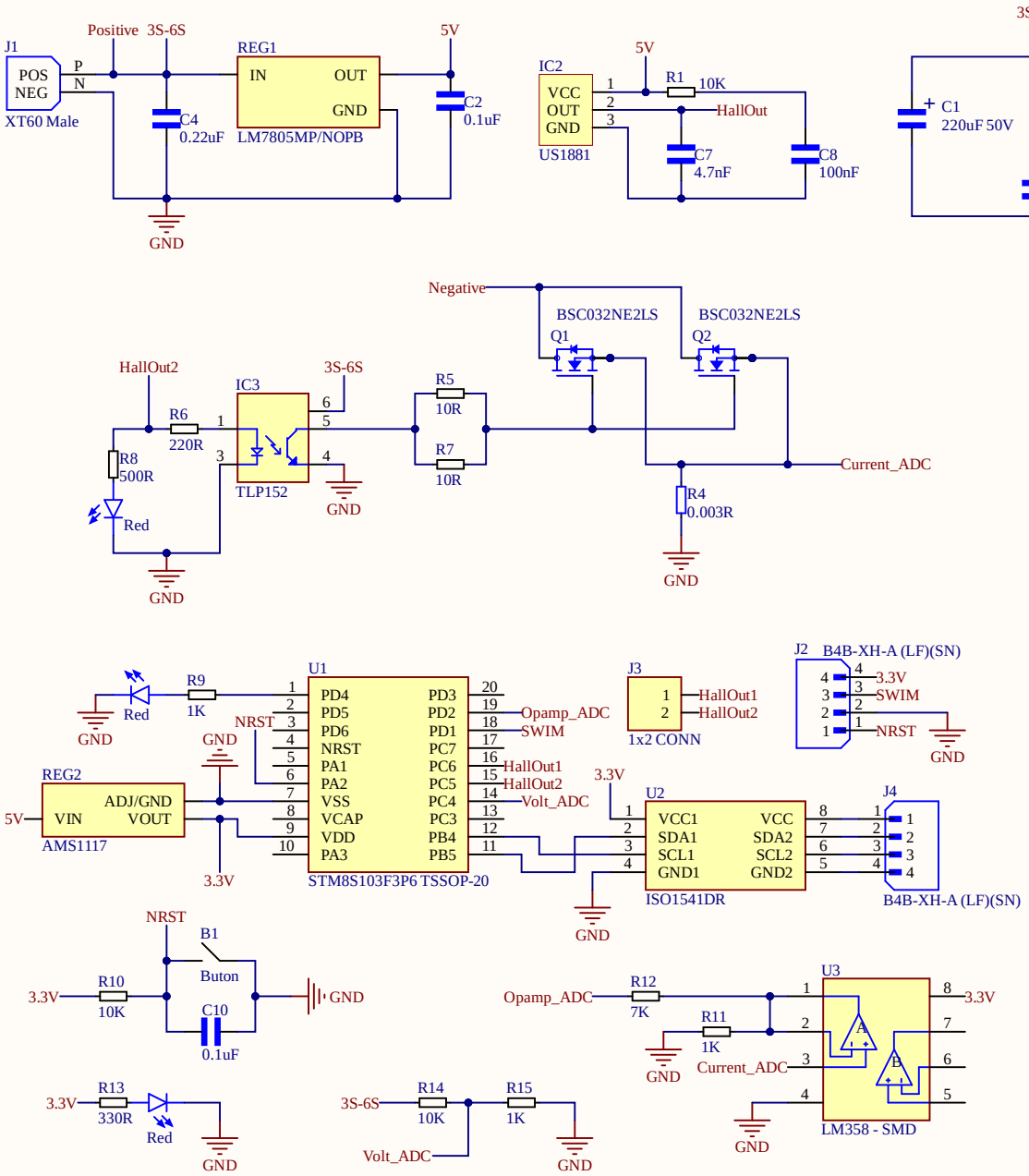


| Title | | |
|---|---|---|
| Size A4 | Number | Revision |
| Date: 10.31.2024 | | Sheet of |
| File: C:\Users\..\sch.SchDoc | | Drawn By: |