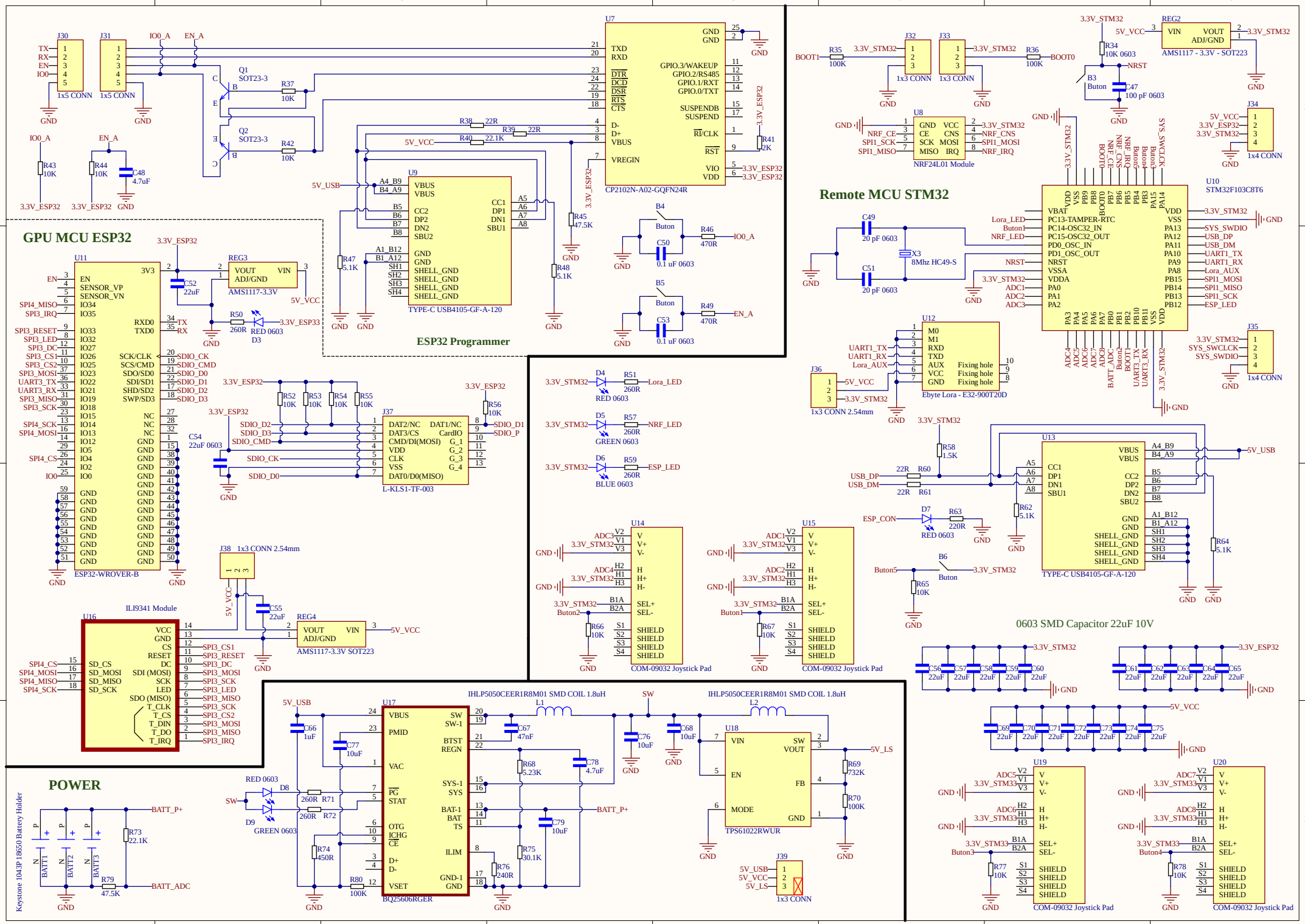
GPU MCU ESP32
ESP32 Programmer
Remote MCU STM32
POWER
U7
CP2102N-A02-GQFN24R
U9
TYPE-C USB4105-GF-A-120
U11
ESP32-WROVER-B
REG3
AMS1117-3.3V
J37
L-KLS1-TF-003
J38
1x3 CONN 2.54mm
U16
ILI9341 Module
REG4
AMS1117-3.3V SOT223
U8
NRF24L01 Module
U10
STM32F103C8T6
REG2
AMS1117 - 3.3V - SOT223
U12
Ebyte Lora - E32-900T20D
J36
1x3 CONN 2.54mm
U13
TYPE-C USB4105-GF-A-120
U14
COM-09032 Joystick Pad
U15
COM-09032 Joystick Pad
U17
BQ25606RGER
U18
TPS61022RWUR
U19
COM-09032 Joystick Pad
U20
COM-09032 Joystick Pad
J39
1x3 CONN
Keystone 1043P 18650 Battery Holder
IHLP5050CEER1R8M01 SMD COIL 1.8uH
0603 SMD Capacitor 22uF 10V