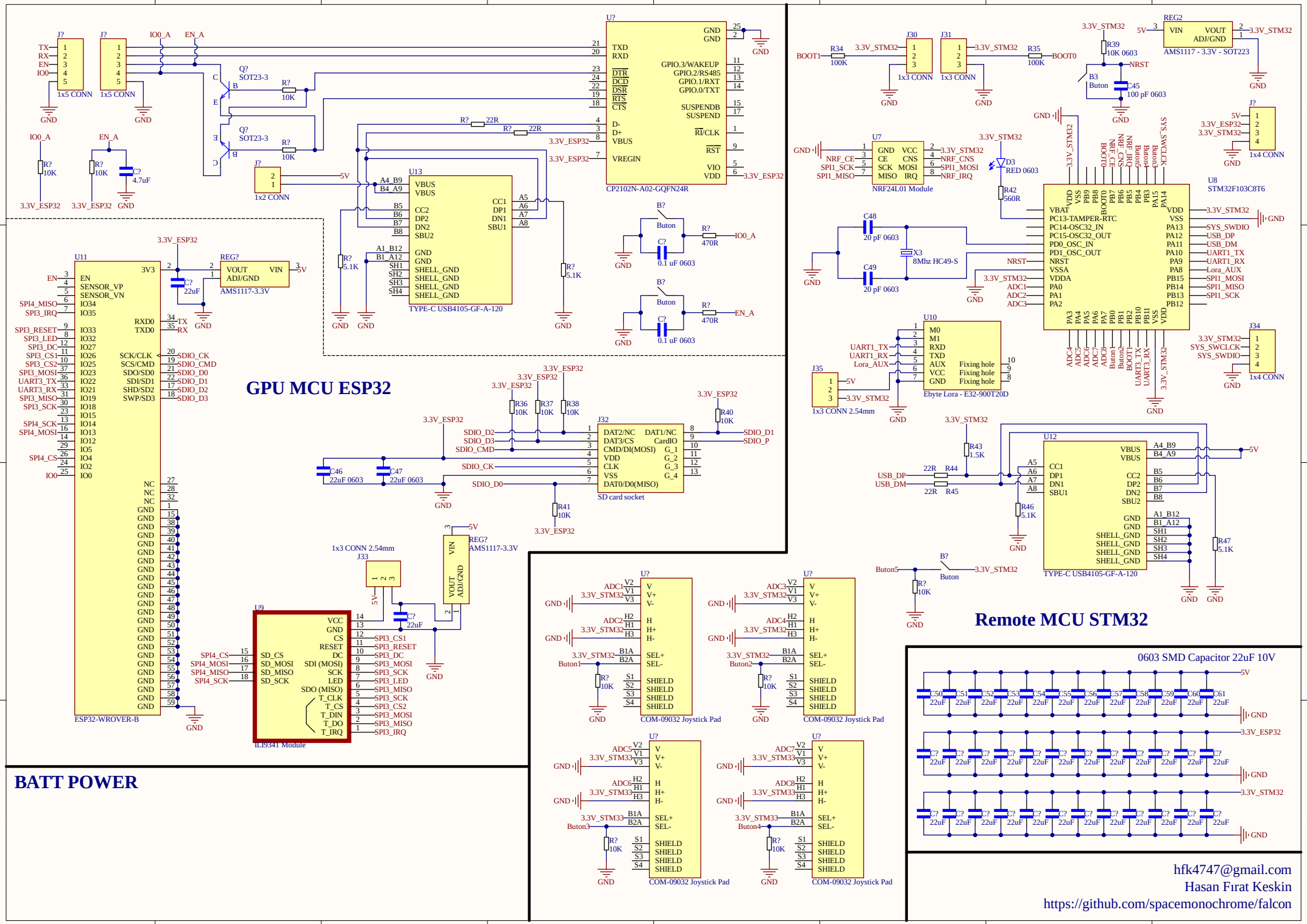
GPU MCU ESP32
Remote MCU STM32
BATT POWER
0603 SMD Capacitor 22uF 10V
hfk4747@gmail.com
Hasan Fırat Keskin
https://github.com/spacemonochrome/falcon