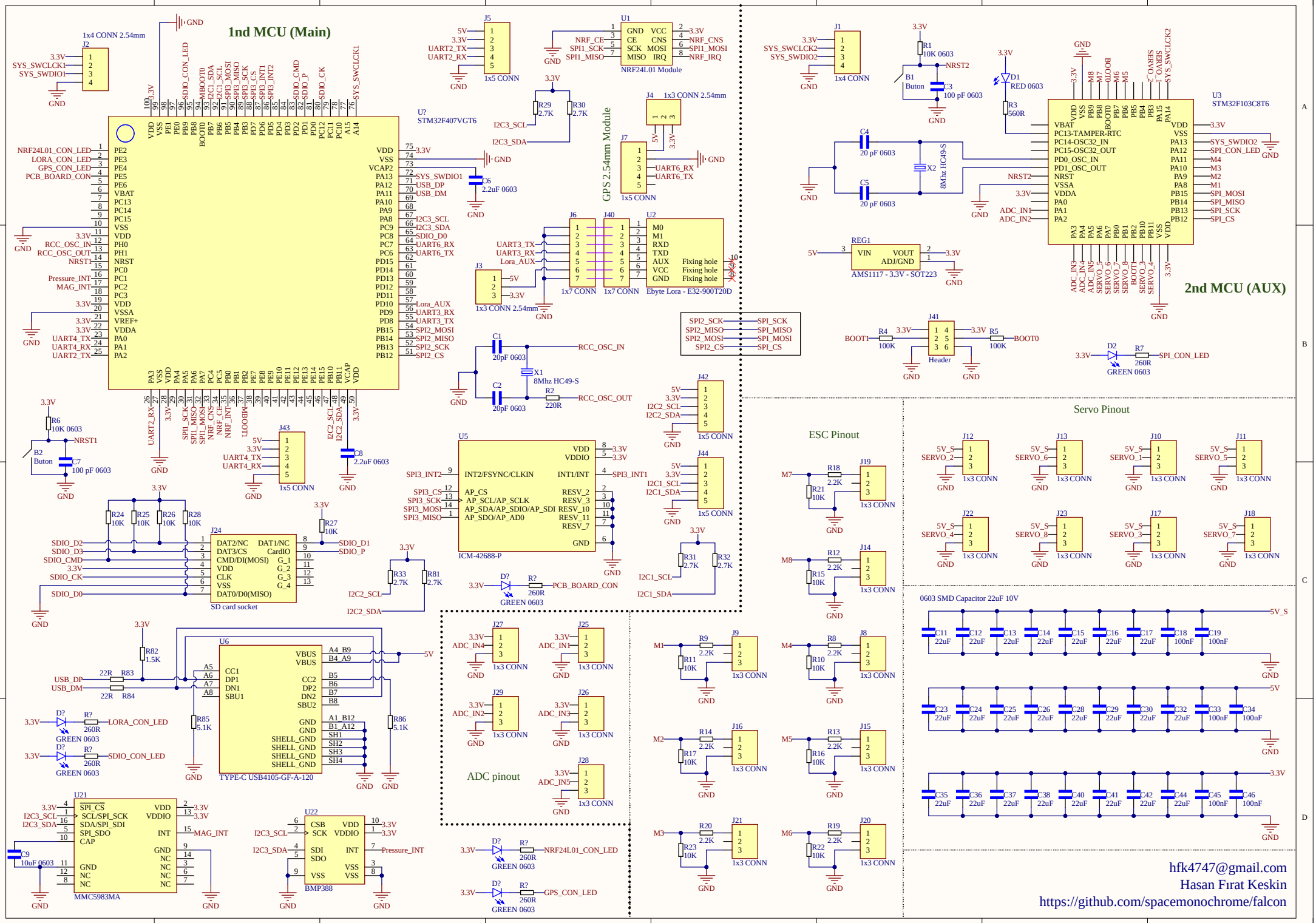
1nd MCU (Main)
2nd MCU (AUX)
U? STM32F407VGT6
U3 STM32F103C8T6
NRF24L01 Module
GPS 2.54mm Module
Ebyte Lora - E32-900T20D
AMS1117 - 3.3V - SOT223
ICM-42688-P
SD card socket
TYPE-C USB4105-GF-A-120
MMC5983MA
BMP388
ESC Pinout
Servo Pinout
ADC pinout
0603 SMD Capacitor 22uF 10V
hfk4747@gmail.com
Hasan Fırat Keskin
https://github.com/spacemonochrome/falcon

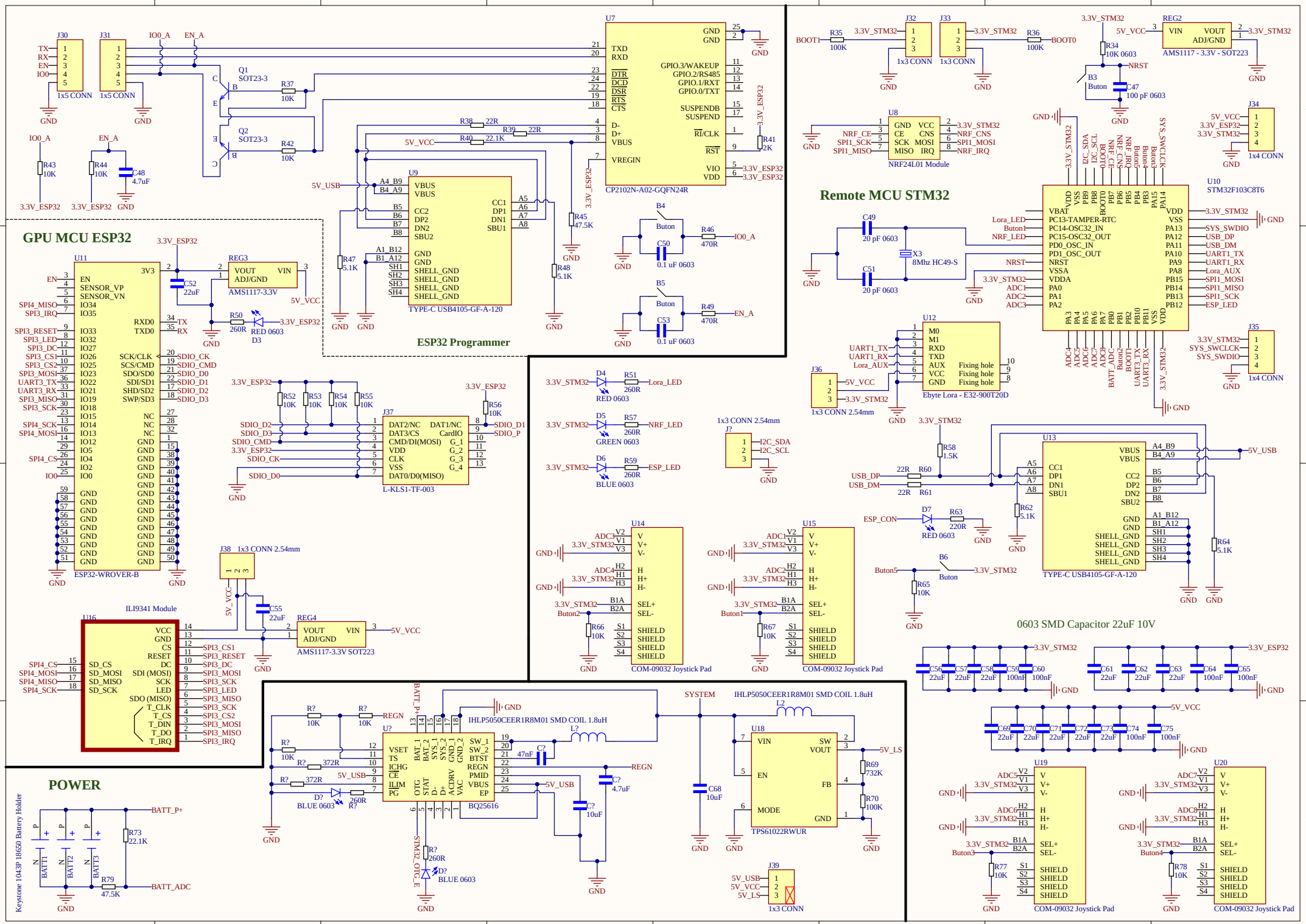
GPU MCU ESP32
ESP32 Programmer
Remote MCU STM32
POWER
ESP32-WROVER-B
TYPE-C USB4105-GF-A-120
CP2102N-A02-GQFN24R
NRF24L01 Module
Ebyte Lora - E32-900T20D
STM32F103C8T6
ILI9341 Module
L-KLS1-TF-003
COM-09032 Joystick Pad
BQ25616
TPS61022RWUR
Keystone 1043P 18650 Battery Holder
0603 SMD Capacitor 22uF 10V