AudioCodes Solutions in the Microsoft Teams Direct Routing Environment

Student Lab Guide

AudioCodes Academy

https://www.audiocodes.com/services-support/audiocodes-academy

Introduction

- Five exercises highlight the features and functions of AudioCodes SBC Application
- Use this presentation and the User Manuals to complete the exercises
- After completing, work on your installed AudioCodes products (recommended)
- Hands-on experience is the best way to:
  - Master a technology
  - Leverage its uses
  - Leverage your ability to troubleshoot and assist your customers

Introduction (cont.)

audiocodes

In every Virtual PC you will find the 3 following softphones with the configured characteristics:

SoftPhone	Company	Transport	Port	User Name / Phone Number
Teams	Microsoft ®	TLS	5061	+xxxx666x005
Linphone	Linphone ®	UDP	5068	xxxx666x101
X-Lite	Counterpath	UDP	5060	xxxx666x102

Note: The ‘x’ has to be replaced by the group number

Labs Exercises

- Lab 1 – Management Interface Usage
  - Getting used to the management interfaces
- Lab 2 – SBC Routing
  - Basic SIP Trunk Configuration
- Lab 3 – Teams to SIP Trunk Connection
  - Basic configuration needed for connection Teams to SIP Trunk
- Lab 4 – SBC Message Manipulation
  - Demonstration of the MMS Mechanism
- Lab 5 – SBC Survivability
  - Demonstration of the Alternative Routing

audiocodes

Hands-on Lab 1

Management Interface Usage

Accessing the system

audiocodes

- Access the system using TeamViewer using the credentials assigned to your Group
- Logon to your assigned virtual PC using the credentials assigned to your Group
- On your virtual PC, run a Web Browser and access your assigned SBC by typing the address 10.15.1X.100 (being **X** your Group number)
- Logon to the system using the default User Name and Password (Admin/Admin)

GUI based configuration and navigation

audiocodes

- Under the Setup menu go to the IP Network Tab
  - Choose the **Network View** option and take a look at your core networking entities
  - Choose the **Core Entities** option and open the **IP Interfaces** page
  - Change the Default Gateway to 10.15.100.1
  - Change the Primary DNS Server to 10.15.10.100
  - Save your configuration
  - Choose the **Physical Ports** option and take a look at the status of your Ethernet Ports
  - Check the possible values for Speed/Duplex, keep it as Auto Negotiation
- Under the Setup menu go to the Signaling & Media Tab
  - Choose the **Topology View** option and take a look at your core networking entities
  - Without changing any value navigate through the different options to get used to them

GUI based configuration and navigation

audiocodes

- Under the Setup menu go to the Administration Tab
  - Choose the **Web & CLI** option and take a look at the following
    - Currently defined local users
    - Web and CLI settings (*don't modify any of those parameters*)
  - Choose the **Maintenance** option and check how can you do the following:
    - Saving and Loading an INI file
    - Uploading auxiliary files (check which auxiliary files)
    - Resetting the device
    - Checking your current license key
    - Upgrading your software (please don't start this process)

Tip: Is there another way of accessing those pages?

GUI based configuration and navigation

audiocodes

- Under the Monitor menu go to the Monitor Tab
  - Choose the **Monitor View** option and take a look at your device information
  - Choose the **Device Information** option and find the following:
    - MAC Address
    - Serial Number
    - Firmware version
    - Uploaded files
  - Choose both **Alarm** options and check your active and history alarms

Tip: Is there another way of accessing the Active Alarms page?

CLI based configuration

- Access the SBC using Telnet
  (use PuTTY, located in the Utilities folder on the desktop)
- Logon to the system
  - At the CLI prompt, type the username (case sensitive):
    - Username: *Admin*
  - At the prompt, type the password (case sensitive):
    - Password: *Admin*
  - At the prompt, type the following:
    - *enable*
  - At the prompt, type the password again:
    - Password: *Admin*

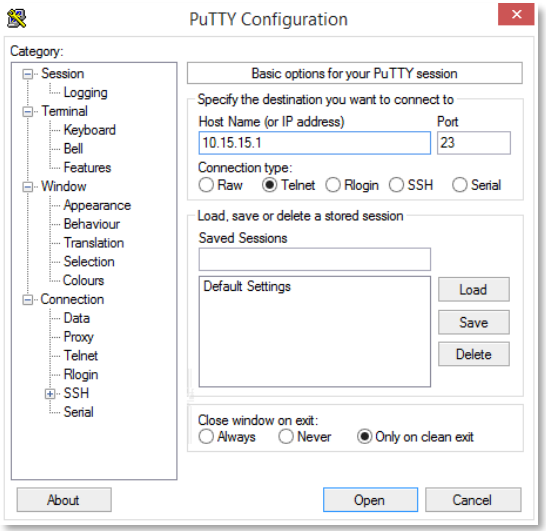

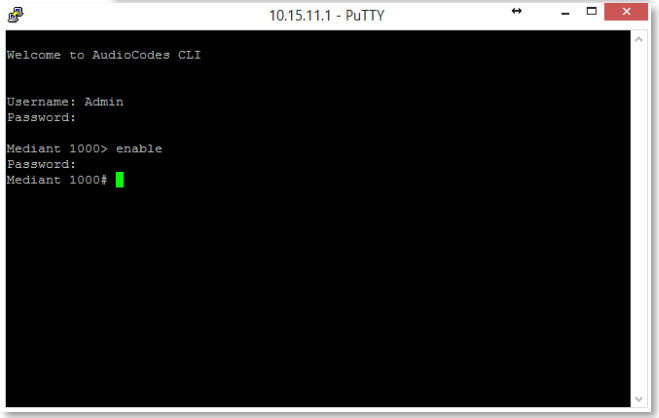

CLI based configuration

audiocodes

- Show the available commands
  - At the prompt, type the following and then press Enter
    - *?*
  - To scroll down and see more pages, press the space bar
- Show the available parameters under the Show command
  - At the prompt, type the following and then press Enter
    - *show ?*
- Show your Running Configuration
  - At the prompt, type the following and then press Enter
    - *sh ru*
  - Take a look at your current configuration and find similarities with the GUI in the structure
  - To scroll down and see more pages, press the space bar

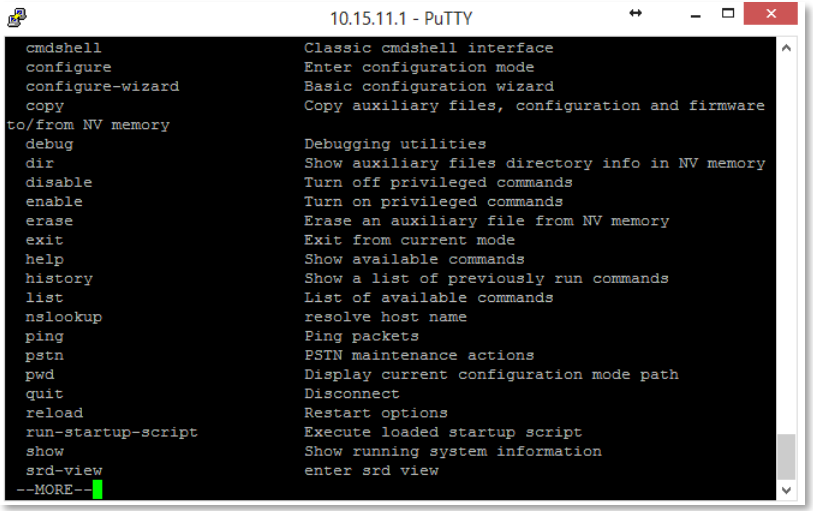

CLI based configuration

audiocodes

- Access the network configuration mode:
  - # *configure network*
- Access the Interface table:
  - (config-network)# *interface network-if 0*
- Configure the Default Gateway address:
  - (network-if-0)# *gateway 10.15.0.1*
- Configure the Primary DNS:
  - (network-if-0)# *primary-dns 10.15.10.1*
- Exit the Interface table:
  - (network-if-0)# *exit*
- Exit the network configuration mode:
  - (config-network)# *exit*

Tip: Use the ? at any time to get help for allowed commands and/or parameters

AdminPage based configuration

audiocodes

- Run a Web Browser and access your assigned SBC by typing the address 10.15.1X.100 (every x should be replaced with your Group number)
- Logon to the system using the default User Name and Password (Admin/Admin)
- To access the AdminPage use the following URL in your browser
  - *10.15.1x.100/AdminPage*
- Choose the option *ini* parameters on the left side menu
- To override the Company Logo Image, use the following parameter
  - *USEWEBLOGO with a value of 1*
- To replaces default AudioCodes logo image with your own text, use the following parameter
  - *WEBLOGOTEXT with a value of "Group x"*

Note: These parameters can only be changed using the AdminPage or by editing and uploading an ini file

ini File based configuration

- While in the AdminPage, go back to the main page by choosing the option *Back to Main*
- Use either the Actions tab or the Configuration option under the Administration tab to save your configuration file (*ini* file)

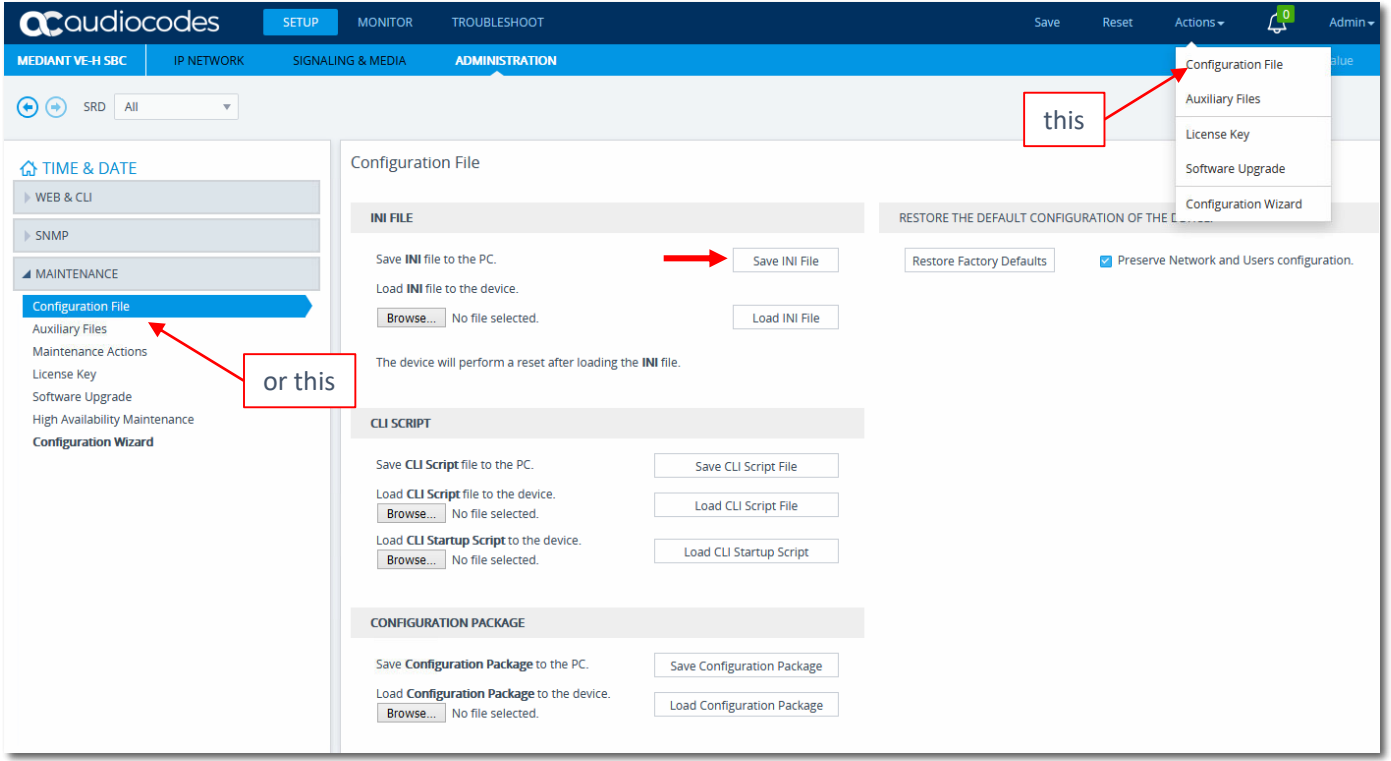

ini File based configuration

audiocodes

- Open the saved file by using the INI Viewer&Editor utility and take a look at your configured parameters
- Add a Welcome Message to your SBC, something like this:

Welcome Group x

- Using the supplied documentation, open the Mediant's user manual and find out what has to be done to add the mentioned message
- In a similar way as the file was saved, upload the new *ini* file to your system and see your Welcome Message

Tip: You can upload an ***INI Incremental file*** using the Auxiliary Files option. What is the benefit of this?

Result example for Group 1 →

Note

WELCOME GROUP 1

Empty INI file

- Open Notepad
- Don’t enter anything in the file
- Save the file as *Empty.ini*
- Upload the new *ini* file to your system
- Is the Company Logo Image switch back to audiocodes logo?

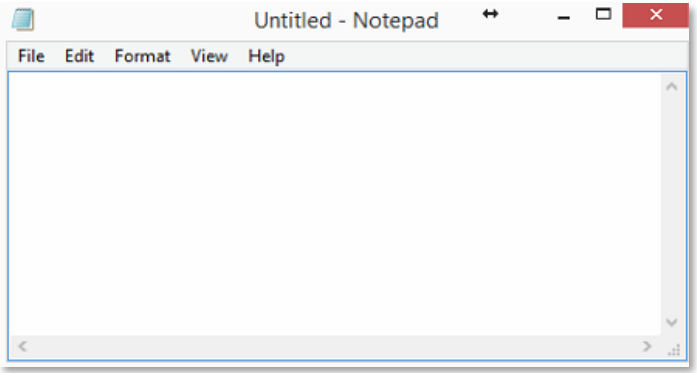

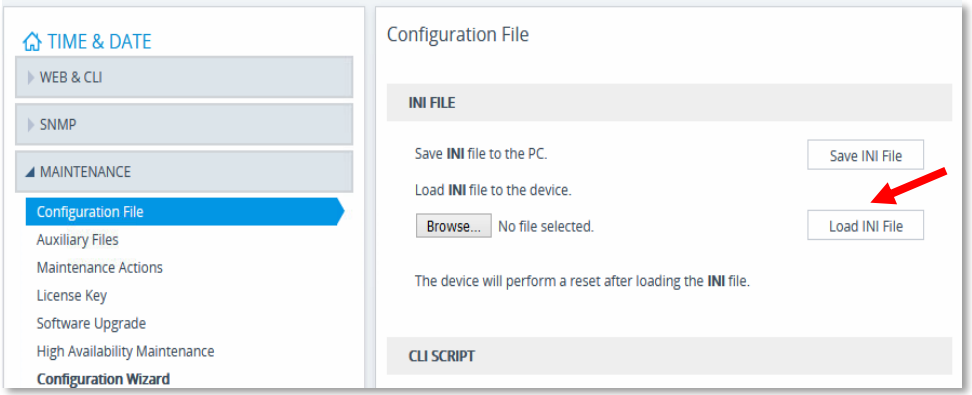

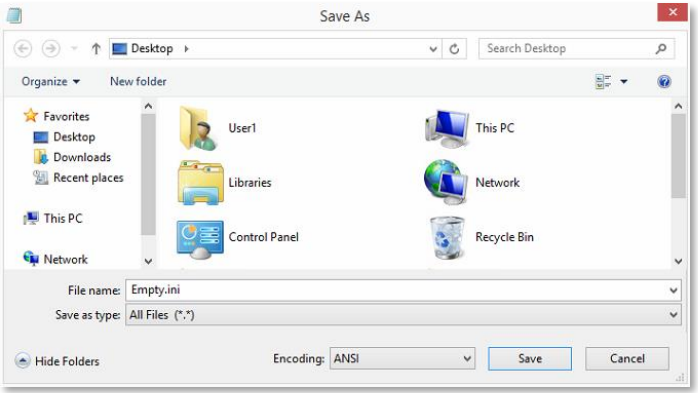

Auxiliary Files – Incremental INI

- Open Notepad
- Enter the follow to the file:
  - *USEWEBLOGO = 0*
  - *WEBLOGOTEXT =* ***(= to empty)***
- Save the file as *Test.ini*
- Upload the ini from the Auxiliary Files page
- Is the Company Logo Image switch back to audiocodes logo?

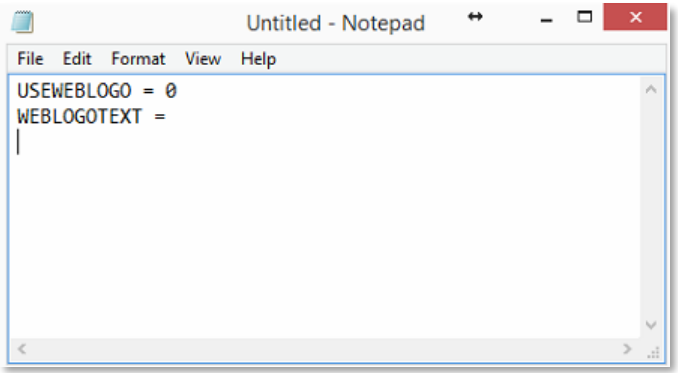

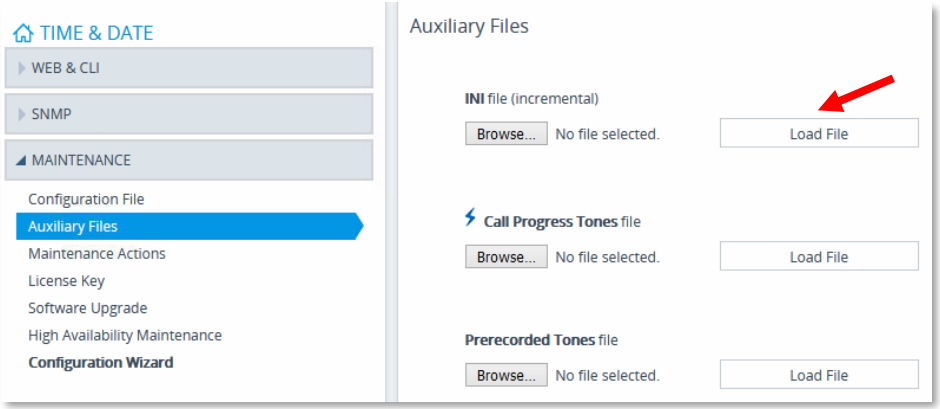

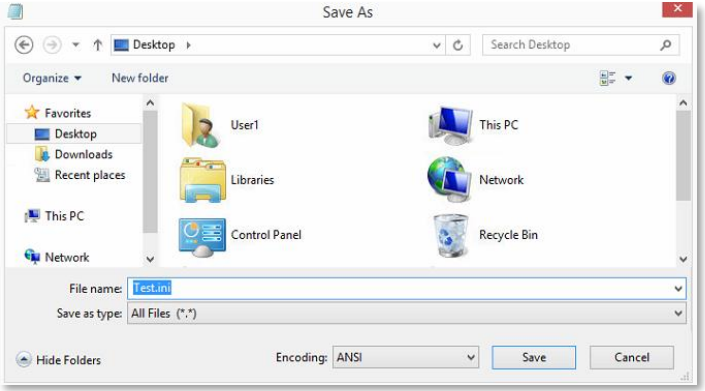

audiocodes

Hands-on Lab 2

SBC Routing

Lab Environment

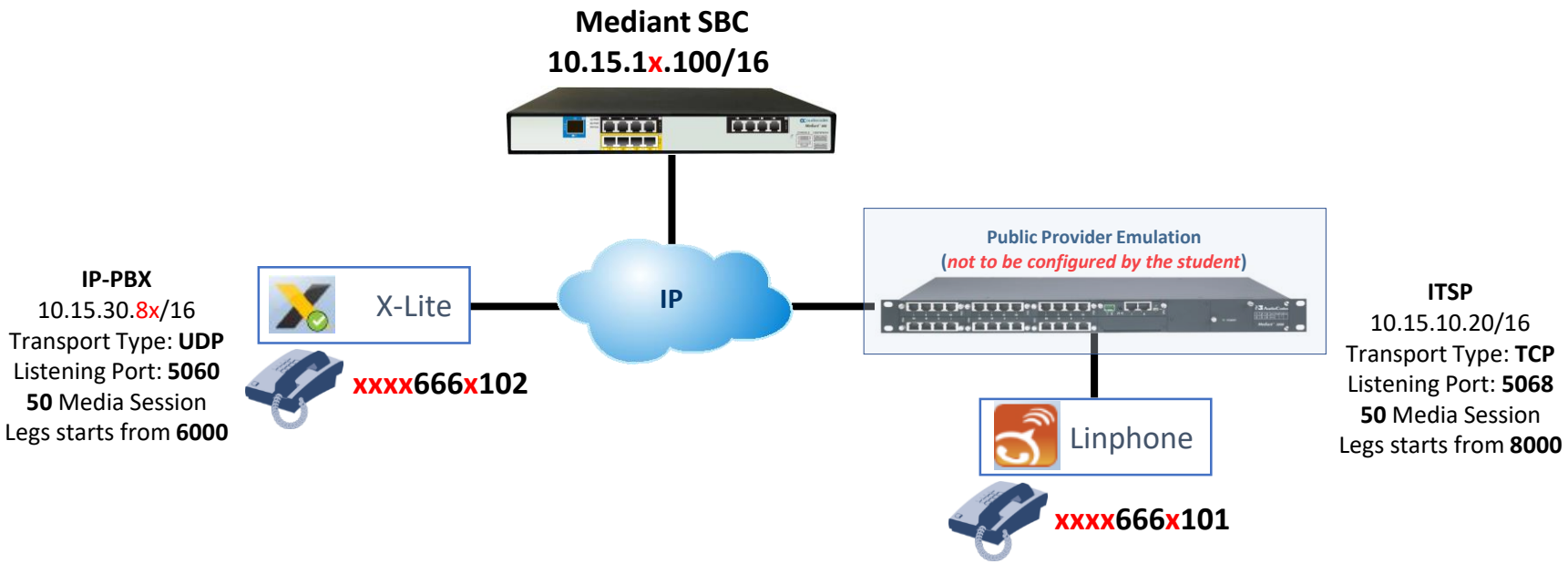

The Goal of the Lab

- Configure all entities for proper routing calls from IP-PBX to ITSP and vice versa

Pre Configuration

- IP Interface Table
  - Check that the IP Interface: 10.15.1X.100/16 (don’t change, it is already pre-configured)

Media Realm Table

- You can use the default Media Realm (Index 0), but modify the ports
- Configure 2 Media Realms:
  - MR-IPPBX:
    - IPv4 Interface Name: Voice
    - From media port: 6000
    - Number Of Media Session Legs: 50
  - MR-ITSP:
    - IPv4 Interface Name: Voice
    - From media port: 8000
    - Number Of Media Session Legs: 50

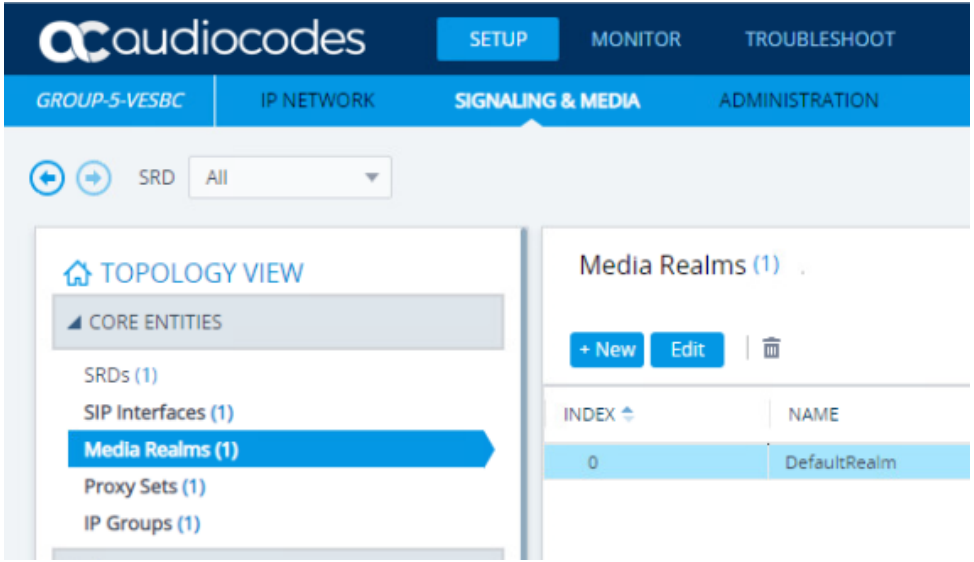

SIP Interface Table

- You can use the default SIP Interface (Index 0), but modify the ports
- Configure 2 SIP Interfaces:
  - `SIP-IPPBX:`
    - Network Interface: `Voice`
    - Application Type: `SBC`
    - UDP Port: `5060`
    - TCP Port: `0`
    - TLS Port: `0`
    - Media Realm: `MR-IPPBX`
  - `SIP-ITSP:`
    - Network Interface: `Voice`
    - Application Type: `SBC`
    - UDP Port: `0`
    - TCP Port: `5068`
    - TLS Port: `0`
    - Media Realm: `MR-ITSP`

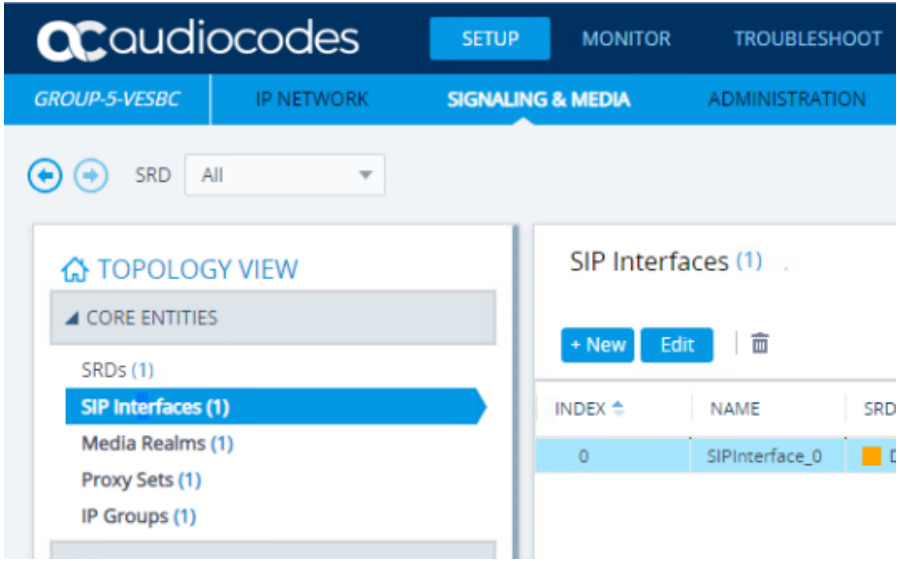

Proxy Sets Table

- You can use the Default Proxy Set (Index 0), but modify the configuration
- Configure 2 Proxy Sets:
  - `PS-IPPBX:`
    - SBC IPv4 SIP Interface: `SIP-IPPBX`
    - Proxy Keep-Alive: `Options`
    - Proxy Address: `10.15.30.8X:5060` (in the child table)
    - Transport Type: `UDP` (in the child table)
  - `PS-ITSP:`
    - SBC IPv4 SIP Interface: `SIP-ITSP`
    - Proxy Keep-Alive: `Options`
    - Proxy Address: `10.15.10.20:5068` (in the child table)
    - Transport Type: `TCP` (in the child table)

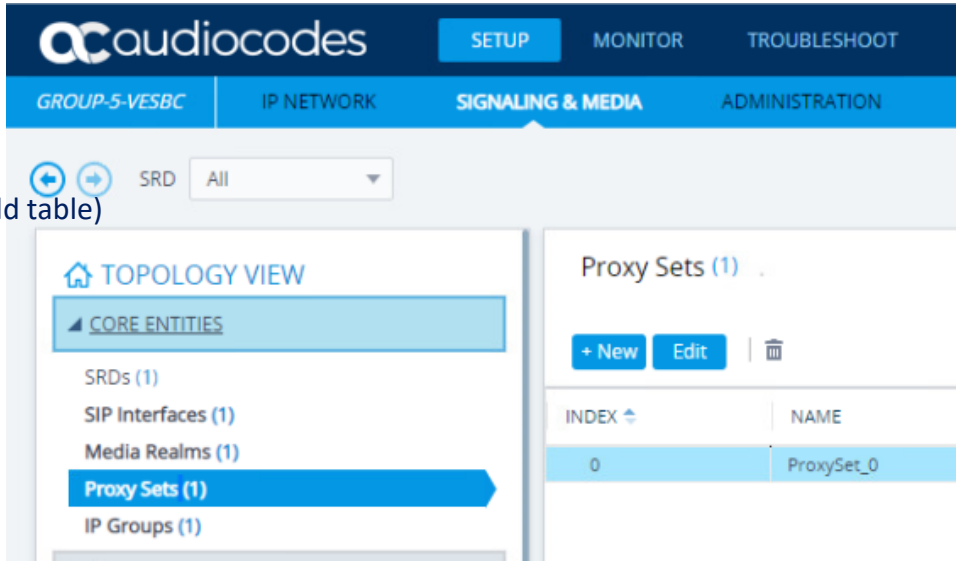

IP Group Table

- You can use the Default IG Group (Index 0), but modify the configuration
- Configure 2 IP Groups:
  - `IPG-IPPBX:`
    - Type: `Server`
    - Proxy Set: `PS-IPPBX`
    - Media Realm: `MR-IPPBX`
    - Classify By Proxy Set: `Enable`
  - `IPG-ITSP:`
    - Type: `Server`
    - Proxy Set: `PS-ITSP`
    - Media Realm: `MR-ITSP`
    - Classify By Proxy Set: `Enable`

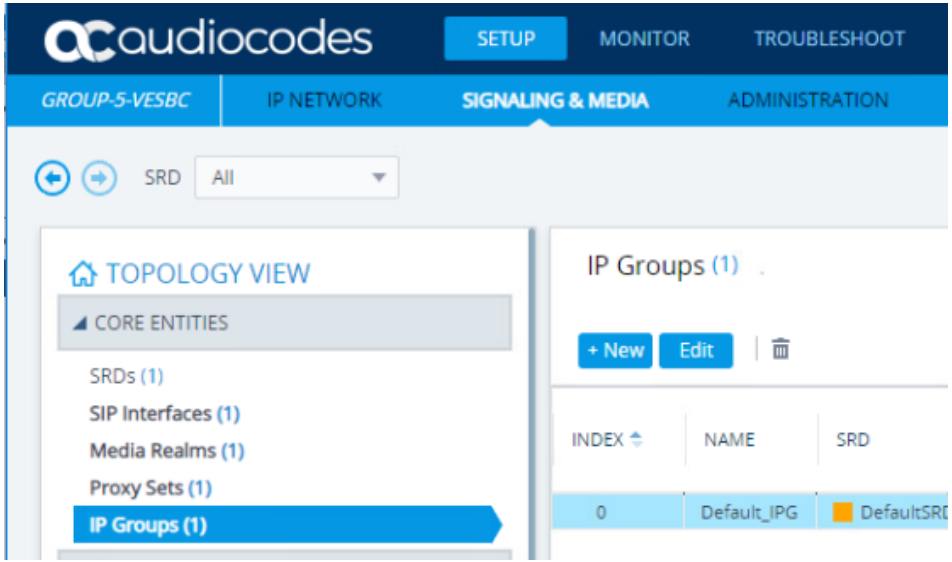

IP to IP Routing Table

- Create the following rules:
  - Options termination:
    - Source IP Group: Any
    - Request Type: OPTIONS
    - Destination Type: Internal
    - Internal Action: Reply(Response='200')
  - IP-PBX to ITSP:
    - Source IP Group: IPG-IPPBX
    - Request Type: All
    - Destination Type: IP Group
    - Destination IP Group: IPG-ITSP
  - ITSP to IP-PBX:
    - Source IP Group: IPG-ITSP
    - Request Type: All
    - Destination Type: IP Group
    - Destination IP Group: IPG-IPPBX

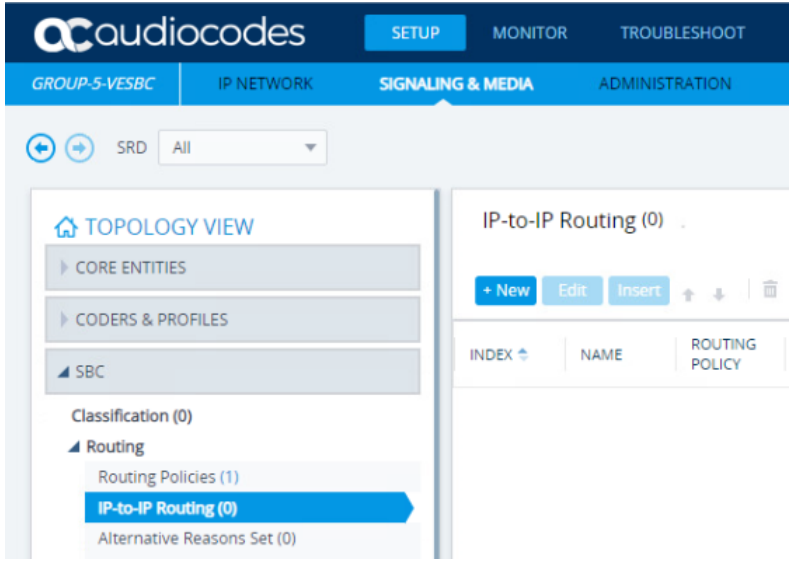

Syslog

- Enable Syslog for troubleshooting:
  - Enable Syslog: `Enable`
  - Syslog Server IP: `10.15.30.8X` (Your PC IP address)
  - VoIP Debug Level: `Detailed`

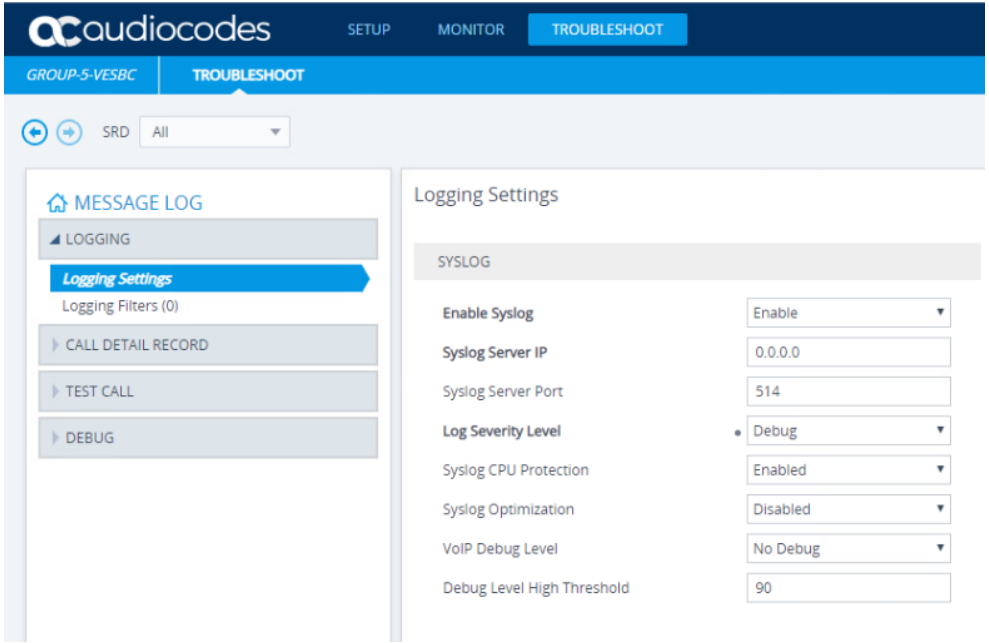

Test calls

- From the IP-PBX (X-Lite) call to **+xxxx666x101**
  - Main ITSP (Linphone) should ring
- From the ITSP (Linphone) call to **+xxxx666x102**
  - IP-PBX (X-Lite) telephone should ring

- Open syslog (It is already installed on the remote PC)
  - Verify that the SBC performs the right routing decisions

- Save configuration to Flash

Expected results

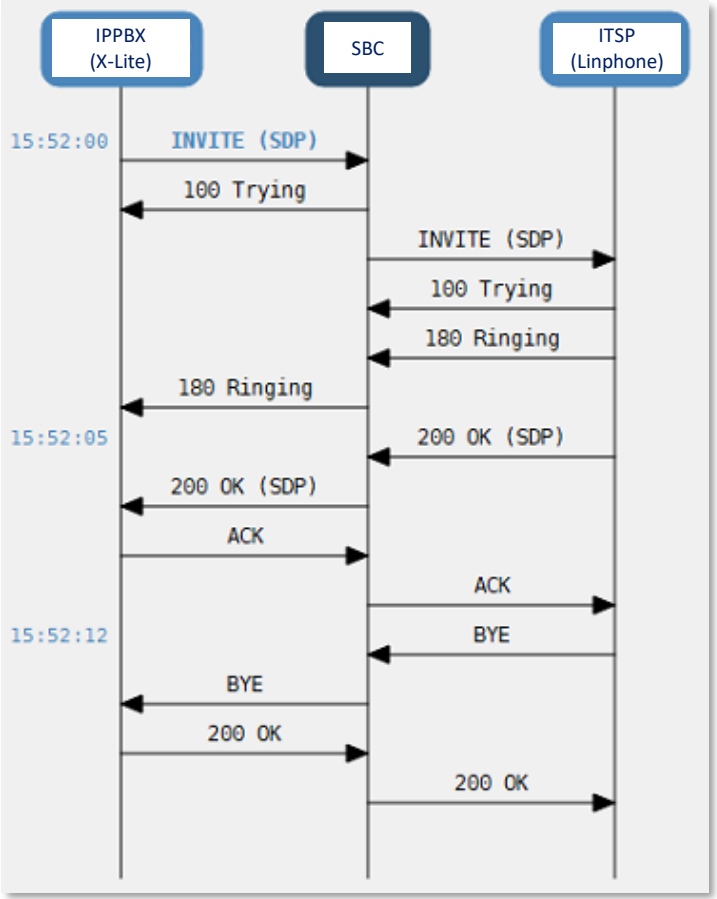

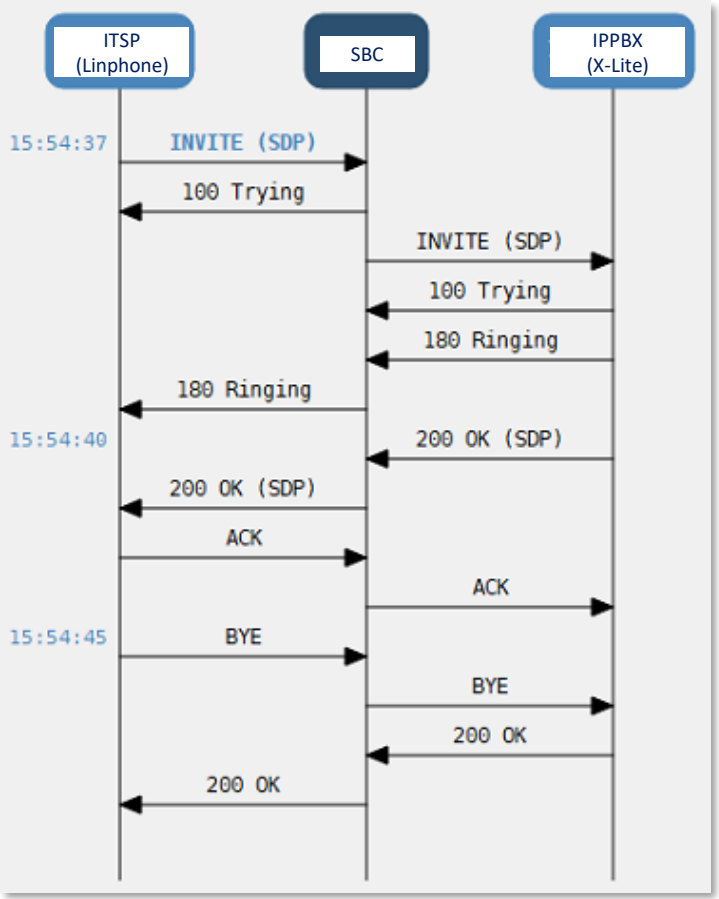

SBC Wizard (Optional)

- Save the configuration file on your virtual PC
- Restore Factory defaults with (Preserve Network and Users configuration)

- Make the same SBC configuration that was done in the previous pages by using the SBC Configuration wizard integrated in the device
- Apply & Reset
- Perform call tests

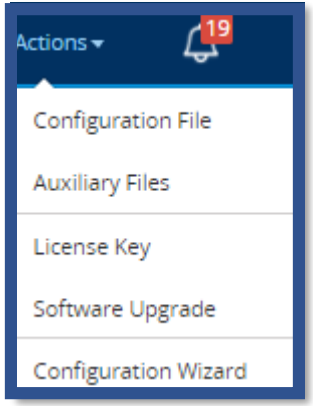

audiocodes

Hands-on Lab 3

Teams Direct Routing to SIP Trunk Connection

The Goal of the Lab

- To get familiar with configuration parameters for connecting Teams Direct Routing to the SIP Trunk

Lab Environment

Teams Direct Routing
FQDN:
sip.pstnhub.Microsoft.com
Sip2.pstnhub.Microsoft.com
Sip3.pstnhub.Microsoft.com
Transport Type: **TLS**
Listening Port: **5061**
50 Media Session Legs starts from **7000**

DMZ address per Group

173.227.253.92 Group 1
173.227.253.93 Group 2
173.227.253.94 Group 3
173.227.253.95 Group 4
173.227.253.96 Group 5

DMZ: 173.227.253.9x/26

Mediant SBC

LAN: 10.15.1x.100/16

+xxxx666x005

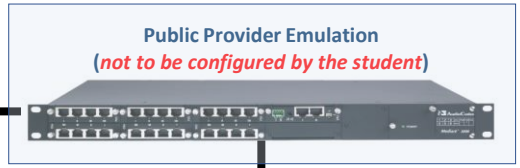

xxxx666x101

ITSP
10.15.10.20/16
Transport Type: **TCP**
Listening Port: **5068**
50 Media Session Legs starts from **8000**

Restore Defaults

audiocodes

SETUP | MONITOR | TROUBLESHOOT | Save | Reset | Actions | 4 | Admin

M800B | IP NETWORK | SIGNALING & MEDIA | ADMINISTRATION | Entity, parameter, value

SRD All

TIME & DATE
- WEB & CLI
- SNMP
- LICENSE
- MAINTENANCE
  - Maintenance Actions
  - Configuration File
  - Auxiliary Files
  - Software Upgrade
  - Configuration Wizard

Configuration File

INI FILE

Save **INI** file to the PC — Save INI File

Load **INI** file to the device.

Choose File — No file chosen — Load INI File

CLI SCRIPT

Save **CLI Script** file to the PC — Save CLI Script File

Load **CLI Script** file to the device.

Choose File — No file chosen — Load CLI Script File

Load **CLI Startup Script** to the device.

Choose File — No file chosen — Load CLI Startup Script

CONFIGURATION PACKAGE

Save **Configuration Package** to the PC. — Save Configuration Package

Load **Configuration Package** to the device.

Choose File — No file chosen — Load Configuration Package

RESTORE THE DEFAULT CONFIGURATION OF THE DEVICE

Restore Factory Defaults — ☑ Preserve basic connectivity.

Verify IP Configuration

- Verify Voice IP address:
  (don't change, it is already pre-configured)
  - Group 1: 10.15.11.100 /16
  - Group 2: 10.15.12.100 /16
  - Group 3: 10.15.13.100 /16
  - Group 4: 10.15.14.100 /16
  - Group 5: 10.15.15.100 /16

- Verify DMZ IP address:
  (don't change, it is already pre-configured)
  - Group 1: 173.227.253.92 /26
  - Group 2: 173.227.253.93 /26
  - Group 3: 173.227.253.94 /26
  - Group 4: 173.227.253.95 /26
  - Group 5: 173.227.253.96 /26

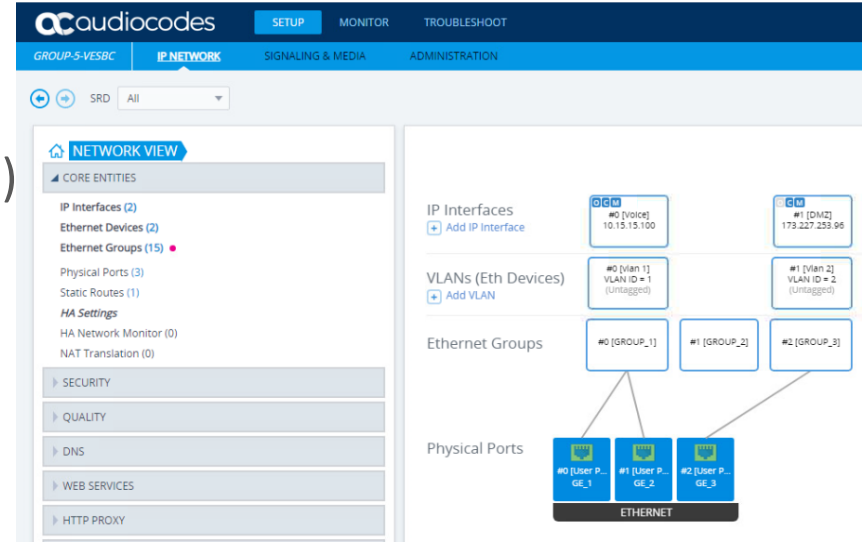

Verify IP Configuration

- Configure NTP Server – 8.8.8.8
- Check that TLS Context, called **Teams**, exist
- Enable SRTP on the device

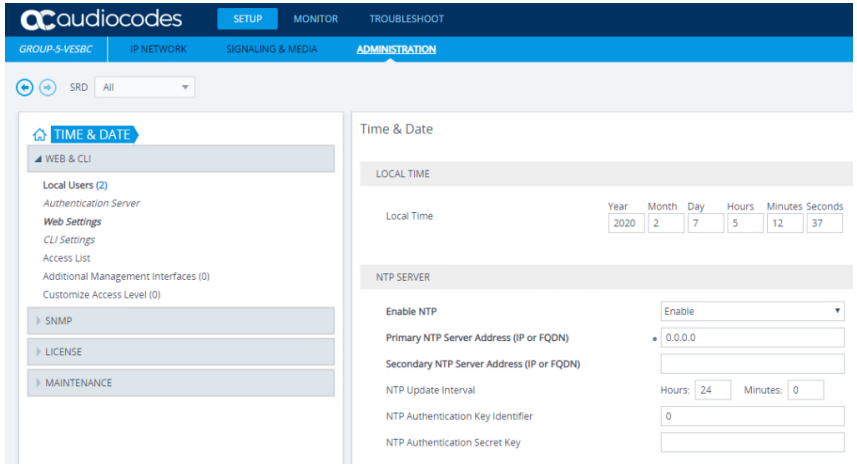

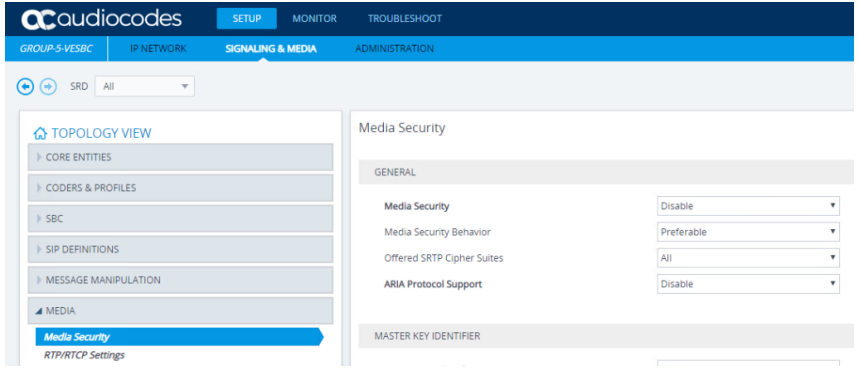

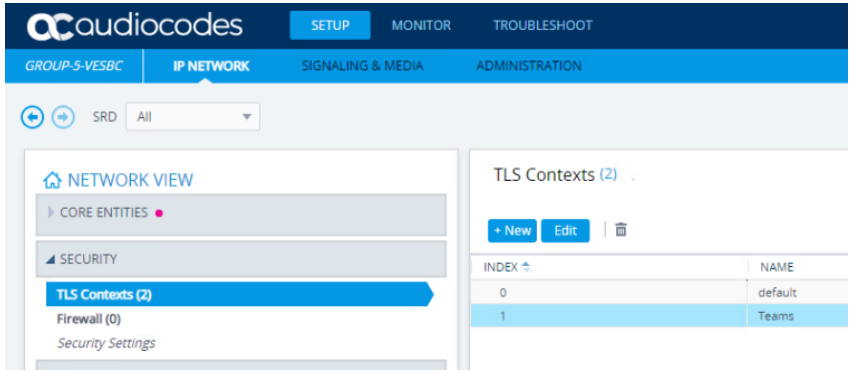

Media Realm Table

- You can use the default Media Realm (Index 0), but modify the ports
- Configure 2 Media Realms:
  - MR-ITSP:
    - IPv4 Interface Name: Voice
    - From media port: 8000
    - Number Of Media Session Legs: 50
  - MR-Teams:
    - IPv4 Interface Name: DMZ
    - From media port: 7000
    - Number Of Media Session Legs: 50

SIP Interface Table

audiocodes

- You can use the default SIP Interface (Index 0), but modify the ports and Application Type
- Configure 2 SIP Interfaces:
  - `ITSP:`
    - Network Interface: `Voice`
    - Application Type: `SBC`
    - TCP Port: `5068`
    - UDP and TLS Ports: `0`
    - Media Realm: `MR-ITSP`
  - `Teams:`
    - Network Interface: `DMZ`
    - Application Type: `SBC`
    - UDP and TCP Ports: `0`
    - TLS Port: `5061`
    - Media Realm: `MR-Teams`
    - Enable TCP Keepalive: `Enable`
    - Classification Failure Response Type: `0`

Proxy Sets Table

- You can use the Default Proxy Set (Index 0), but modify the configuration
- Configure 2 Proxy Sets:
  - `ITSP:`
    - SBC IPv4 SIP Interface: `ITSP`
    - Proxy Keep-Alive: `Using OPTIONS`
    - Proxy Address: `10.15.10.20:5068` (in the child table)
    - Transport Type: `TCP` (in the child table)
  - `Teams:`
    - SBC IPv4 SIP Interface: `Teams`
    - TLS Context Name: `Teams`
    - Proxy Keep-Alive: `Using OPTIONS`
    - Proxy Hot Swap: `Enable`
    - Proxy Load Balancing Method: `Random Weights`
    - Proxy Address: **see next page**

Teams Proxy Address Table (Child Address table)

audiocodes

- Configure Teams Proxy Address Table:
  - Transport Type: `TLS`
  - 1st Entry:
    - DNS Name 1: `sip.pstnhub.microsoft.com:5061`
    - Priority 1: `1`
    - Weighty 1: `1`
    - Transport Type: `TLS`
  - 2nd Entry:
    - DNS Name 2: `sip2.pstnhub.microsoft.com:5061`
    - Priority 2: `2`
    - Weighty 2: `1`
    - Transport Type: `TLS`
  - 3rd Entry:
    - DNS Name 3: `sip3.pstnhub.microsoft.com:5061`
    - Priority 3: `3`
    - Weighty 3: `1`
    - Transport Type: `TLS`

IP Profile Table

- Configure 2 IP Profiles:
  - ITSP:
    - SBC Media Security Mode: Not Secured
    - Remote REFER Mode: Handle Locally
    - Remote Replaces Mode: Handle Locally
    - Remote 3xx Mode: Handle Locally
  - Teams:
    - SBC Media Security Mode: Secured
    - Remote Early Media RTP Detection Mode: By Media
    - RFC 2833 Mode: Extend
    - ICE Mode: Lite *(Relevant only for Media Bypass)*
    - SIP Update Support: Not Supported
    - Remote re-INVITE: Supported Only With SDP
    - Remote Delayed Offer Support: Not Supported
    - Remote REFER Mode: Handle Locally
    - Remote Replaces Mode: Handle Locally
    - Remote 3xx Mode: Handle Locally
    - Remote Hold Format: Inactive

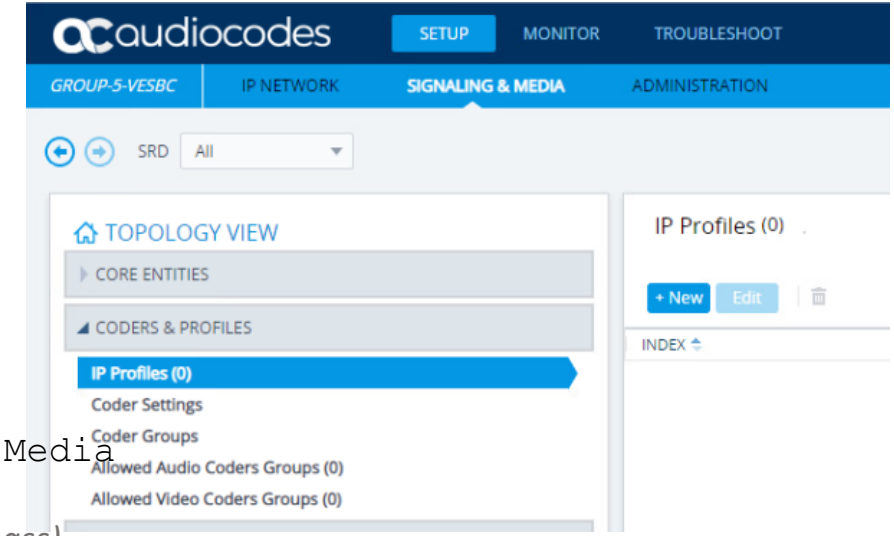

IP Group Table

- You can use the Default IP Group (Index 0), but modify the configuration
- Configure 2 IP Groups:
  - `ITSP:`
    - Type: `Server`
    - Proxy Set: `ITSP`
    - IP Profile: `ITSP`
    - Media Realm: `MR-ITSP`
    - Classify By Proxy Set: `Enable`
  - `Teams:`
    - Type: `Server`
    - Proxy Set: `Teams`
    - IP Profile: `Teams`
    - Media Realm: `MR-Teams`
    - Classify By Proxy Set: `Disable`
    - Local Host Name: `tr-us-sbc`**x**`.audctrunk.aceducation.info`
    - Always Use Src Address: `Yes`
    - Proxy Keep-Alive using IP Group settings: `Enable`

Message Condition Configuration

- Create Message Condition Rule for messages from Teams:
  - `Teams-Contact:`
    - Condition: `Header.Contact.URL.Host contains 'pstnhub.microsoft.com'`

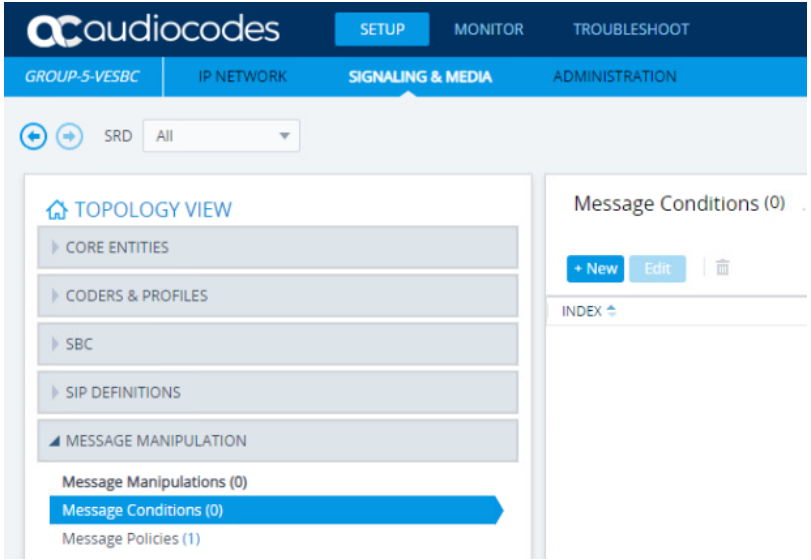

Classification Configuration

- Configure Classification Rule for messages from Teams:
  - `Teams:`
    - Source SIP Interface: `Teams`
    - Destination Host: `tr-us-sbcX.audctrunk.aceducation.info`
    - Message Condition: `Teams-Contact`
    - Action Type: `Allow`
    - Source IP Group: `Teams`

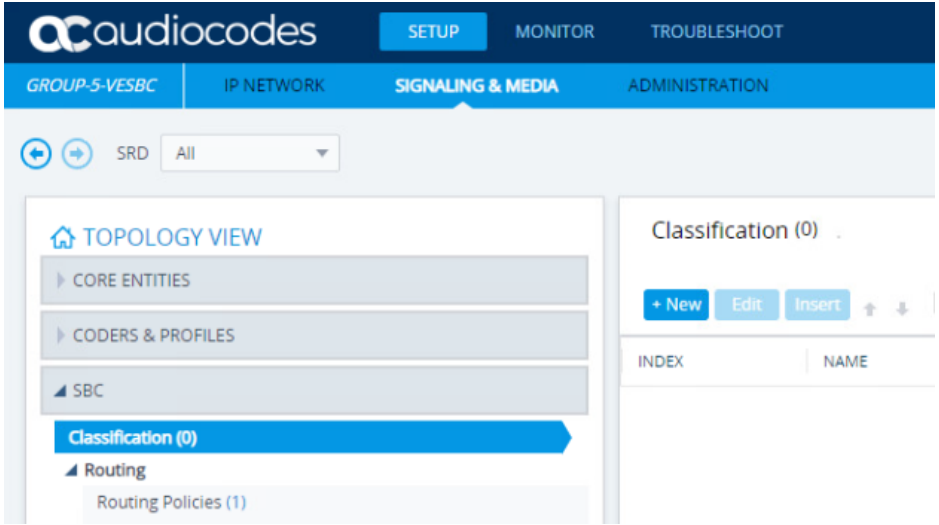

IP to IP Routing Table

audiocodes

- Create the following rules:
  - Options termination:
    - Source IP Group: Any
    - Request Type: OPTIONS
    - Destination Type: Internal
    - Internal Action: Reply (Response='200')
  - REFER Re-routing:
    - Source IP Group: Any
    - Call Triger: REFER
    - ReRoute IP Group: Teams
    - Destination Type: Request URI
    - Destination IP Group: Teams
  - Teams to ITSP:
    - Source IP Group: Teams
    - Request Type: All
    - Destination Type: IP Group
    - Destination IP Group: ITSP
  - ITSP to Teams:
    - Source IP Group: ITSP
    - Request Type: All
    - Destination Type: IP Group
    - Destination IP Group: Teams

IP to IP Outbound Manipulation

- Configure the required number manipulation for:
  - Calls from Teams to ITSP that have a prefix destination number of "+", remove "+" from this prefix on the destination number. Use Inbound Number Manipulation Table.
  - Calls from ITSP to Teams that have any destination number (*), add "+" to the prefix of the destination number. Use Outbound Number Manipulation Table.

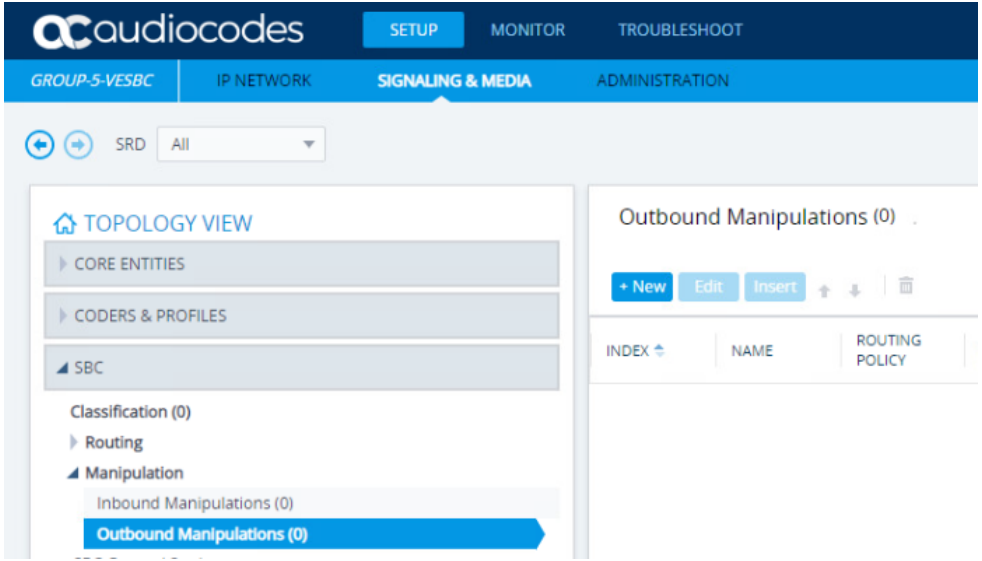

Enable Syslog

- Enable Syslog for troubleshooting:
  - Enable Syslog: `Enable`
  - Syslog Server IP: `10.15.30.8Y` (Your PC IP address)
  - Debug Level: `Detailed`

- Save configuration to Flash

Run the Teams Client on the Virtual PC

- Run the Teams Client:

- If necessary (normally the user is already logged in) enter the Sign-in address field:
  - Group 1 Username: **tr-us-user1@audio-code.net**
  - Group 2 Username: **tr-us-user2@audio-code.net**
  - Group 3 Username: **tr-us-user3@audio-code.net**
  - Group 4 Username: **tr-us-user4@audio-code.net**
  - Group 5 Username: **tr-us-user5@audio-code.net**
  - All users' passwords are: **Pass1234**

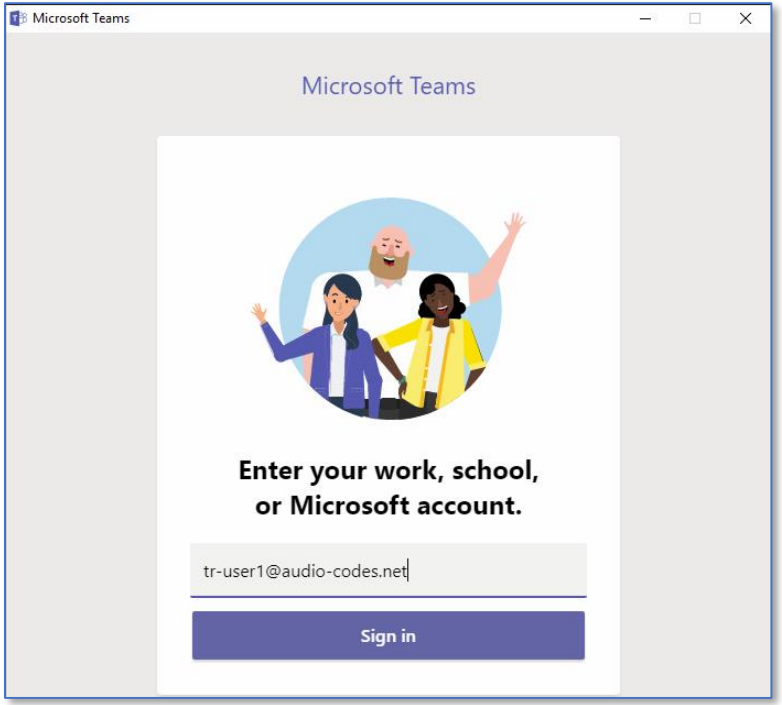

- Click **Sign in**

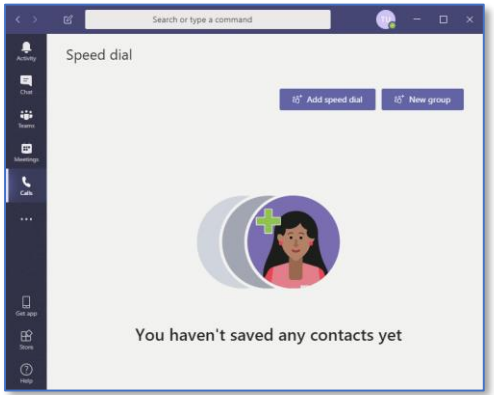

Test calls

- Open syslog Viewer
- Call from Teams Client to Linphone (ITSP) (+xxxx666x101)
- Call from the Linphone (ITSP) to Teams client (xxxx666x005)

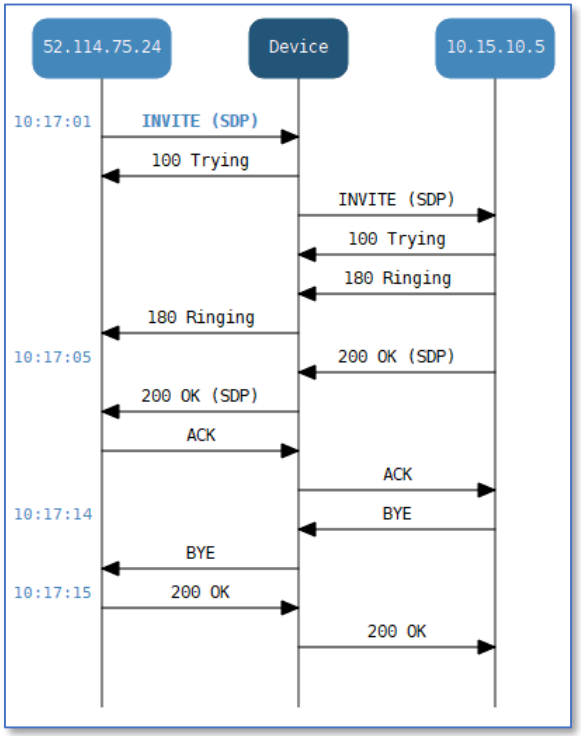

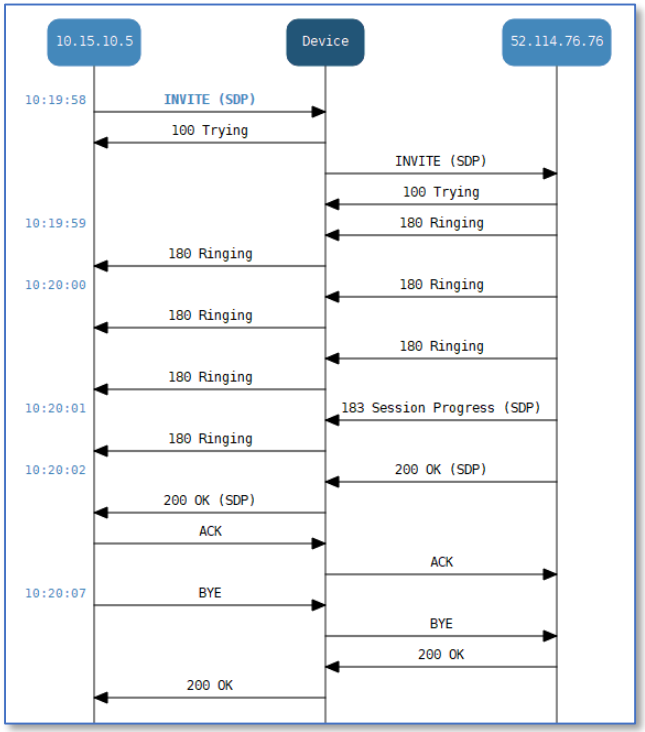

audiocodes

Hands-on Lab 4

SBC Message Manipulation

Lab Environment

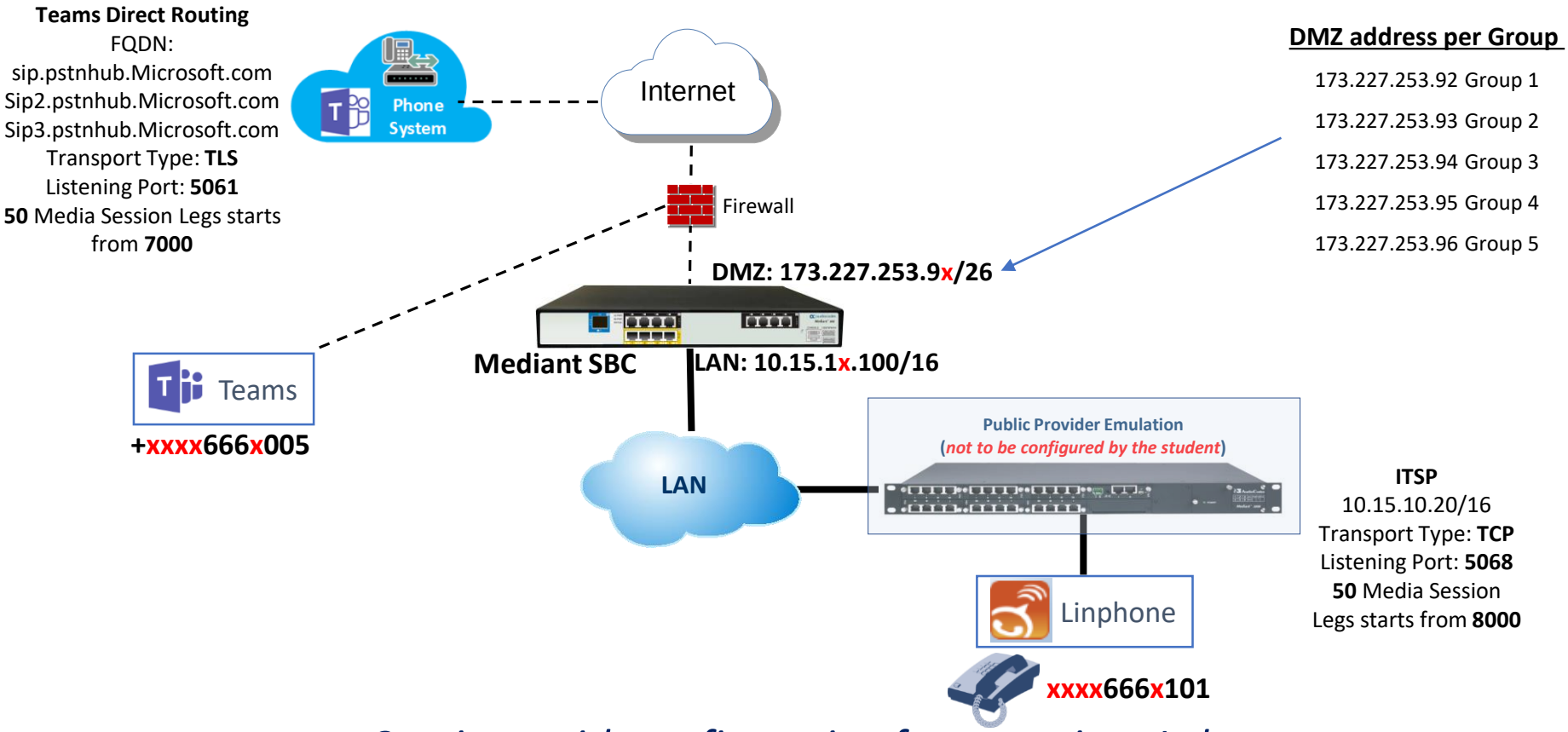

Continue with configuration from previous Lab

The Goal of the Lab

- Performing Message Manipulations on the existing setup

Message Manipulation Pre Configuration

audiocodes

- Assign Message Manipulation Set to IP Groups
  - ITSP:
    - Inbound Message Manipulation Set: 1
    - Outbound Message Manipulation Set: 2
  - Teams:
    - Inbound Message Manipulation Set: 3
    - Outbound Message Manipulation Set: 4

MMS Exercise 1: “From” Header Modification

audiocodes

- For all messages from Teams, modify the User part of the “From” header to 999
  - Name: `Change From Header to 999`
  - Manipulation Set ID: `3`
  - Action Subject: `Header.From.URL.User`
  - Action Type: `Modify`
  - Action Value: `‘999’`

- From the Teams client call to +xxxx666x201 the ITSP (Linphone) should ring

- Open syslog
  - Verify that the ITSP’s requirements described in the next page are accomplished (see the expected results in the next page)

MMS Exercise 1: Expected Result

```
INVITE sip:11115551201@10.15.11.1 SIP/2.0
Via: SIP/2.0/TCP 10.15.11.1:5068;alias;branch=z9hG4bKac864088589
Max-Forwards: 69
From: <sip:999@10.15.11.1>;tag=1c1595745367
To: <sip:11115551201@10.15.11.1>
Call-ID: 285614352261220181247 32@10.15.11.1
CSeq: 1 INVITE
Contact: <sip:11115551101@10.15.11.1:5068;transport=tcp;ob>;+sip.instance="<urn:uuid:28b4f52b-2736-54c3-9d6f-9c
Supported: outbound,timer,replaces,path,sdp-anat
Allow: OPTIONS, SUBSCRIBE, NOTIFY, INVITE, ACK, CANCEL, BYE, REFER, INFO, MESSAGE
Session-Expires: 90
Min-SE: 90
User-Agent: M800B/v.7.20A.250.003
Content-Type: application/sdp
Content-Length: 303
```

MMS Exercise 2: Remove Privacy Header

audiocodes

- Microsoft Teams send Privacy Header in all INVITE messages.
  Some ITSPs doesn't accept this header and asked to remove it
- For all INVITE messages from Teams, where Privacy Header exists, remove it
  - Name: `Remove Privacy Header`
  - Manipulation Set ID: `2`
  - Message Type: `Invite`
  - Condition: `Header.Privacy exists`
  - Action Subject: `Header.Privacy`
  - Action Type: `Remove`

- From the Teams client call to +xxxx666x201 the ITSP (Linphone) should ring
- Open syslog
  - Verify that the ITSP's requirements described in the next page are accomplished (see the expected results in the next page)

MMS Exercise 2: Expected Result

audiocodes

Before manipulation

```
INVITE sip:+11115551201@tr-sbc1.audctrunk.aceducation.info:5061;user=phone;transport=tls SIP/2.0
FROM: Tr-User1 <sip:+11115551005@sip.pstnhub.microsoft.com:5061;user=phone>;tag=a1ad6d347f8
TO: <sip:+11115551201@tr-sbc1.audctrunk.aceducation.info:5061;user=phone>
CSEQ: 1 INVITE
CALL-ID: 6f06f9cc55fc56afbcbb633554677b64
MAX-FORWARDS: 70
VIA: SIP/2.0/TLS 52.114.76.76:5061;branch=z9hG4bK9778c8
RECORD-ROUTE: <sip:sip-du-a-eu.pstnhub.microsoft.com:5061;transport=tls;lr>
CONTACT: <sip:api-du-c-euwe.pstnhub.microsoft.com:8000;transport=tls;x-i=cee32342-e676-48b3-bf7·
CONTENT-LENGTH: 2061
USER-AGENT: Microsoft.PSTNHub.SIPProxy v.2019.1.24.1 i.EUNO.4
CONTENT-TYPE: application/sdp
ALLOW: INVITE
ALLOW: ACK
ALLOW: OPTIONS
ALLOW: CANCEL
ALLOW: BYE
ALLOW: NOTIFY
P-ASSERTED-IDENTITY: <tel:+11115551005>,<sip:tr-user1@audio-codes.net>
PRIVACY: id
```

After manipulation

```
INVITE sip:11115551201@10.15.11.1;user=phone SIP/2.0
Via: SIP/2.0/TCP 10.15.11.1:5068;branch=z9hG4bKac1933188796
Max-Forwards: 69
From: Tr-User1 <sip:+11115551005@10.15.11.1:5061;user=phone>;tag=1c76968160
To: <sip:11115551201@10.15.11.1;user=phone>
Call-ID: 171512205130120191184 4@10.15.11.1
CSeq: 1 INVITE
Contact: <sip:+11115551005@10.15.11.1:5068;transport=tcp;x-i=cee32342-e676-48b3
Supported: sdp-anat
Allow: INVITE,ACK,OPTIONS,CANCEL,BYE,NOTIFY
User-Agent: M800B/v.7.20A.250.003
P-Asserted-Identity: <tel:+11115551005>
Content-Type: application/sdp
Content-Length: 359
```

MMS Exercise 3: Change the Failure Response Type

audiocodes

- For 603 Decline Response from Teams modify the Response to 486 Busy Here
  - Name: `Change 603 to 486`
  - Manipulation Set ID: `2`
  - Message Type: `Any.Response`
  - Condition: `Header.Request-URI.MethodType == '603'`
  - Action Subject: `Header.Request-URI.MethodType`
  - Action Type: `Modify`
  - Action Value: `'486'`

- From the ITSP (Linphone) call to +xxxx666x005. Teams client should ring
- Decline call on the Teams client
- Open syslog
  - Verify that the ITSP's requirements described in the next page are accomplished (see the expected results in the next page)

MMS Exercise 3: Expected Result

audiocodes

Before manipulation

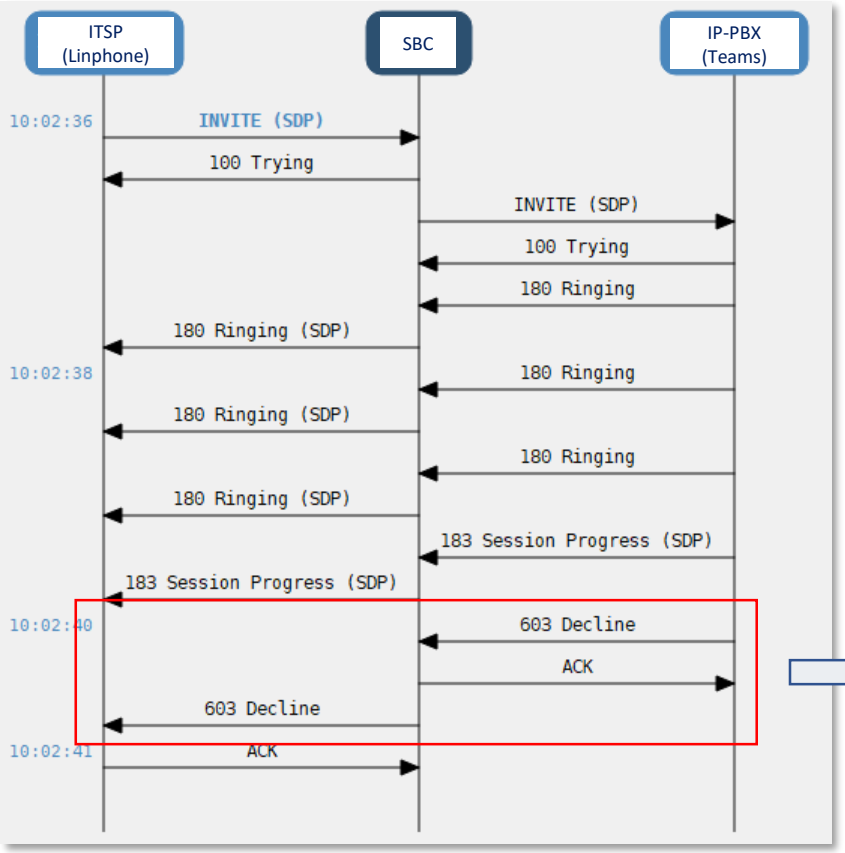

After manipulation

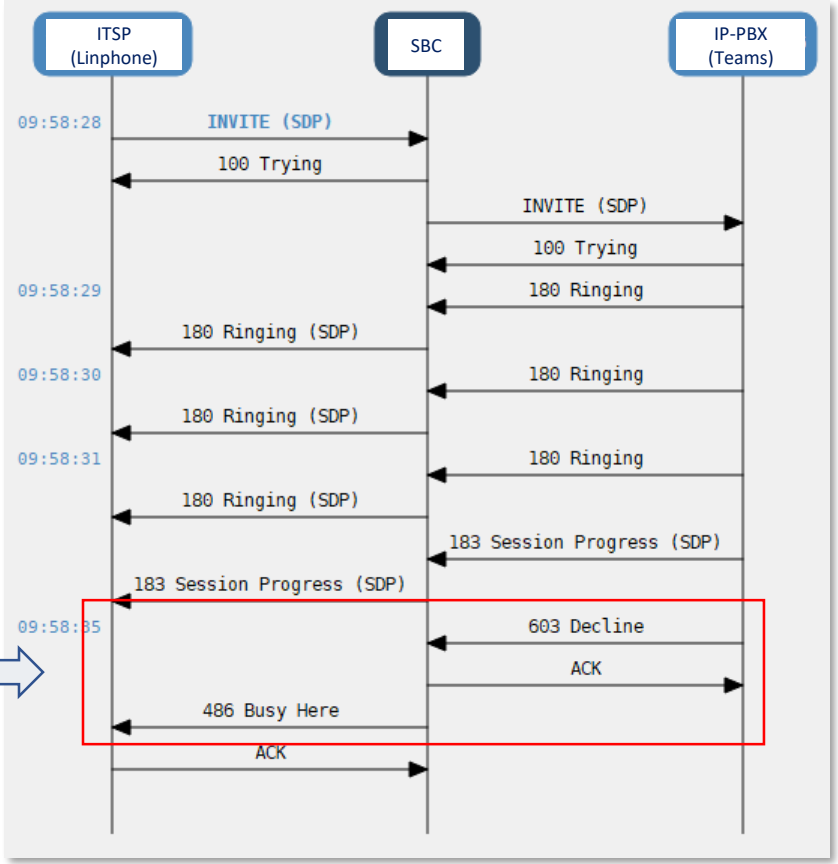

audiocodes

Hands-on Lab 5

SBC Survivability

Lab Environment

Teams Direct Routing
FQDN:
sip.pstnhub.Microsoft.com
Sip2.pstnhub.Microsoft.com
Sip3.pstnhub.Microsoft.com
Transport Type: **TLS**
Listening Port: **5061**
50 Media Session Legs starts from **7000**

NOTE: Since X-lite is not a registered phone, and it is simulating a SIP trunk (Not an endpoint) the X-Lite will ring.

DMZ address per Group

173.227.253.92 Group 1
173.227.253.93 Group 2
173.227.253.94 Group 3
173.227.253.95 Group 4
173.227.253.96 Group 5

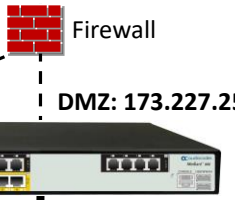

+xxxx666x005

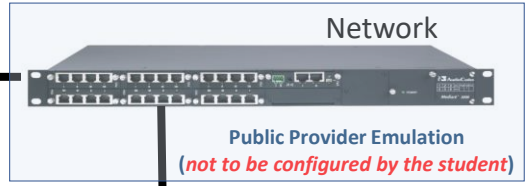

ITSP Alternate
10.15.10.20/16
Transport Type: **TCP**
Listening Port: **5068**
50 Media Session Legs

ITSP1
10.15.30.8X/16
Transport Type: **UDP**
Listening Port: **5060**
50 Media Session Legs

xxxx666x102

xxxx666x101

The Goal of the Lab

audiocodes

- Configure all entities for proper routing calls from Teams to ITSP1 and vice versa
- Exercise #1
  - Add alternative route to ITSP1 in case of ITSP failure (SIP Response code)
- Exercise #2
  - (No Response for SIP Trunk)

SBC Basic Configuration – Exercise #1

audiocodes

- Core Entities
  - Modify SIP Interface 2 to add: UDP port 5060
  - Proxy Set 3 for ITSP1 (X-Lite): 10.15.30.8x:5060 - UDP
  - IP Group 3 related to Proxy Set 3
  - Assign IP Profile ITSP to IP Group 3 (ITSP1)
  - Alternate routing reasons set 0 – 486 Busy & 603 Decline – assign to IP Group 3 for ITSP1
  - Add and Modify routing rules - Teams to ITSP1 (Route Row), Teams to ITSP (Alt), ITSP to Teams, ITSP1 to Teams
  - Add all necessary number manipulations (adding '+' to Teams, removing '+' to both ITSPs)

Test calls – Exercise #1 SIP Response Code

audiocodes

- Open Syslog and verify that SBC performs the right routing decisions
- Test calls:
  1. Routing to “ITSP1” – Primary route
     - From the IP-PBX (Teams) call to **+xxxx666x101**
     - ITSP1 (X-Lite) should ring
  2. Routing to “ITSP” – First alternative
     - From the IP-PBX (Teams) call to **+xxxx666x101**
     - ITSP1 (X-Lite) should ring, click Decline 
     - ITSP (Linphone) should ring
     - **NOTE: Since X-lite is not a registered phone, and it is simulating a SIP trunk (Not an endpoint) the X-Lite will ring.**

Routing to “ITSP1” – Primary route – Exercise #1

- From syslog verify the SIP Flow diagram

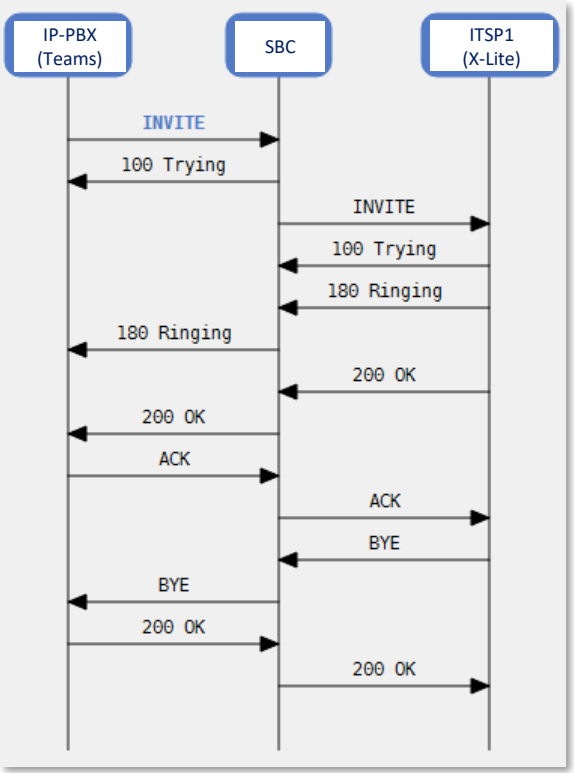

Routing to “ITSP” – 1st Alternative – Exercise #1

- To emulate a problem on the ITSP, Decline the call from the X-Lite client
- Make the call again and verify call re-routing as below:

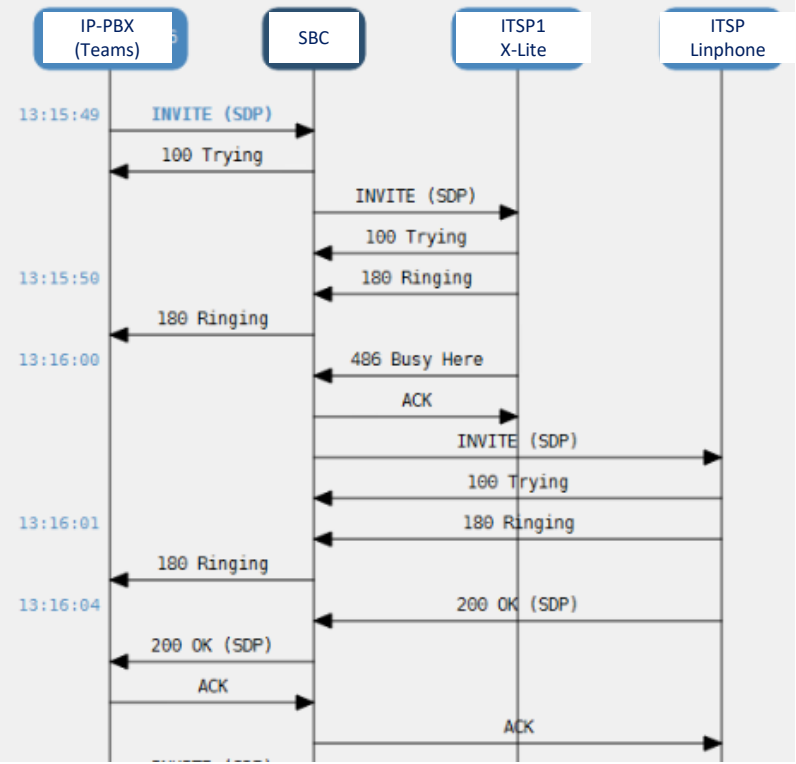

Test calls – Exercise #2 (No SIP Response)

audiocodes

- Open Syslog and verify that SBC performs the right routing decisions
- Test calls:
  1. Routing to “ITSP1” – Primary route
     - From the IP-PBX (Teams) call to **+xxxx666x101**
     - ITSP1 (X-Lite) should ring
  2. Routing to “ITSP” – First alternative
     - From the IP-PBX (Teams) call to **+xxxx666x101**
     - Shutdown X-Lite client on Desktop to simulate failure
     - ITSP (Linphone) should ring
     - **NOTE: Since X-lite is not a registered phone, and it is simulating a SIP trunk (Not an endpoint) the X-Lite will ring.**

Routing to “ITSP1” – Primary route – Exercise #2

audiocodes

- From syslog verify the SIP Flow diagram

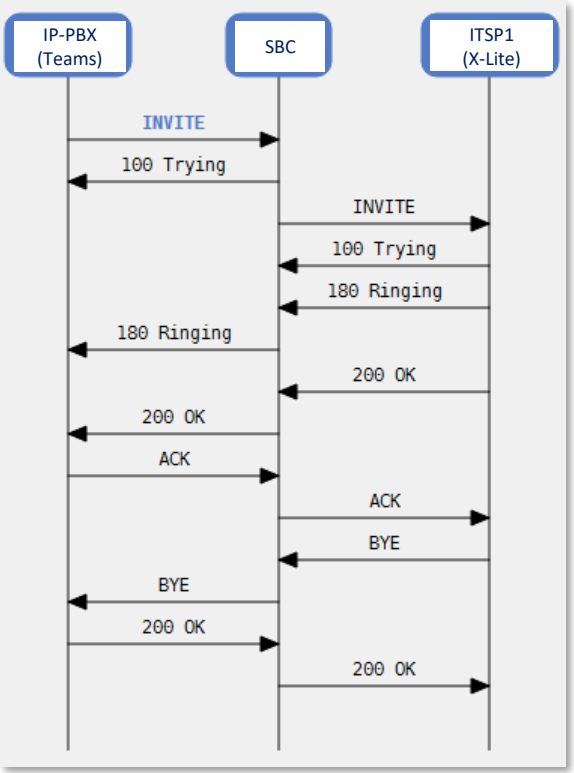

Routing to “ITSP” – 1st Alternative – Exercise #2

- To emulate a problem on the ITSP, Shutdown the X-lite Client
- Make the call again and verify call re-routing as below:

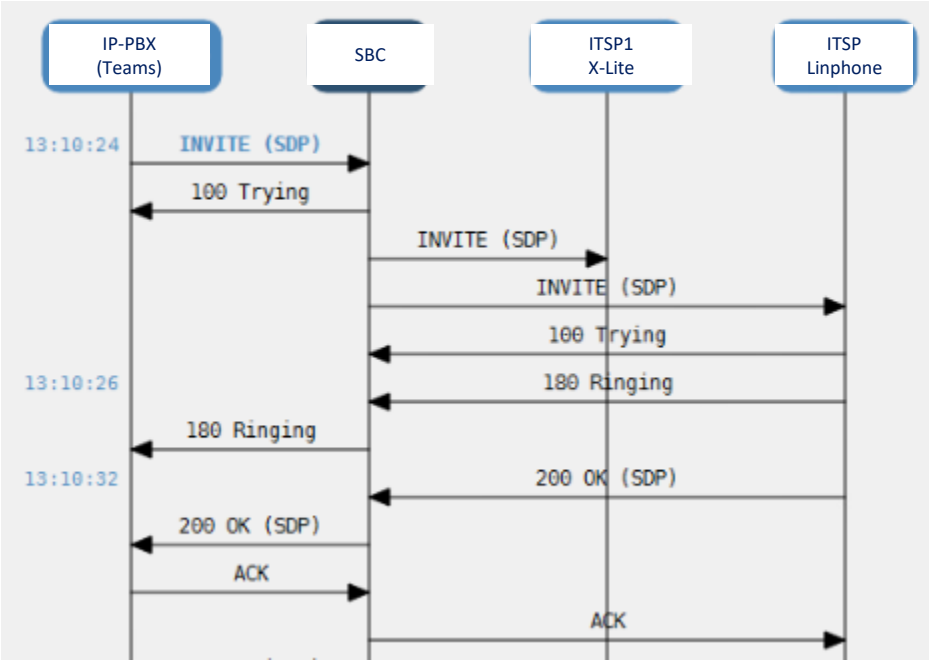

Thank You

Stay in the loop