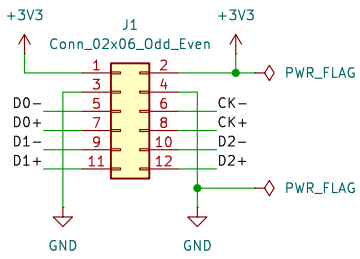

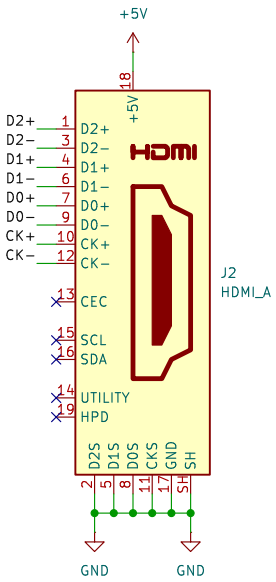

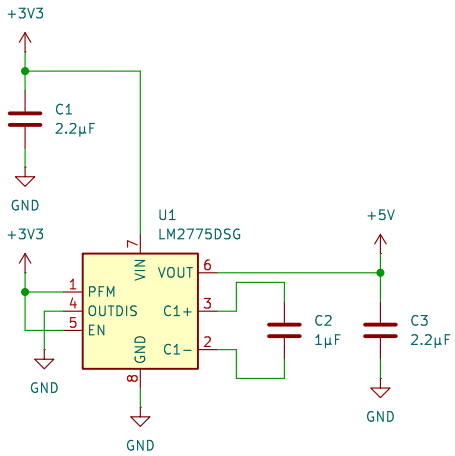

Spark Engineering

Sheet: /

File: hdmi−pmod.kicad_sch

Title: HDMI Pmod

Size: A4	Date: 2024−05−19	**Rev: v1.1**
KiCad E.D.A. 8.0.2−1		Id: 1/1