Pulse-Per-Second

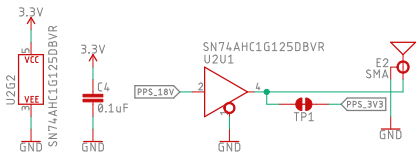

Coplanar Waveguide Calculation:
Copper Thickness (1oz): 1.4mil/0.035mm
Board thickness: 1.6mm
Dielectric thickness (layer 1 to 2): 0.2mm
Er: 4.6
Polygon Isolation: 8mil/0.2032mm
RF Trace Width: 13.74mil/0.349mm
https://chemandy.com/calculators/coplanar-waveguide-with-ground-calculator.htm

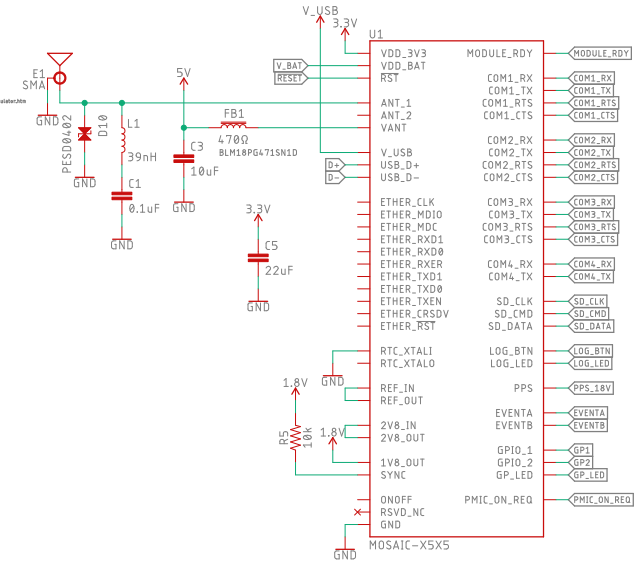

USB and 3.3V Regulation

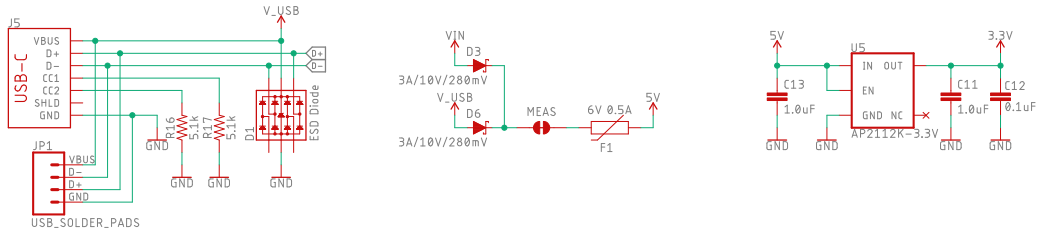

Connections

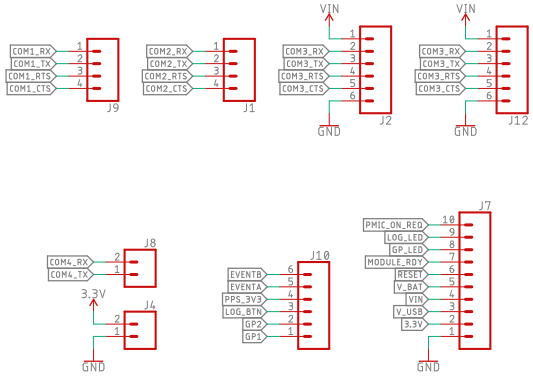

Stat LEDs

Cut jumper to disable LED

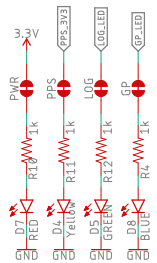

External V_BAT

Cut trace to attach external supply to V_BAT input for Standby mode

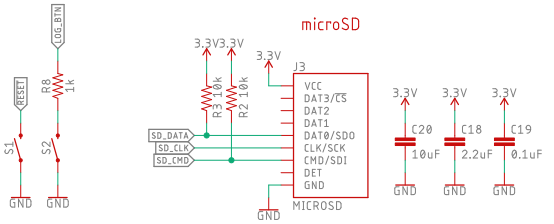

microSD

sparkfun

open hardware

Released under the Creative Commons
Attribution Share-Alike 4.0 License
https://creativecommons.org/licenses/by-sa/4.0/

Special Instructions
No clean process

TITLE: SparkFun_GNSS_Mosaic	
Design by: N. Seidle	REV: v10
Date: not saved!	Sheet: 1/1