USB to UART – CH342

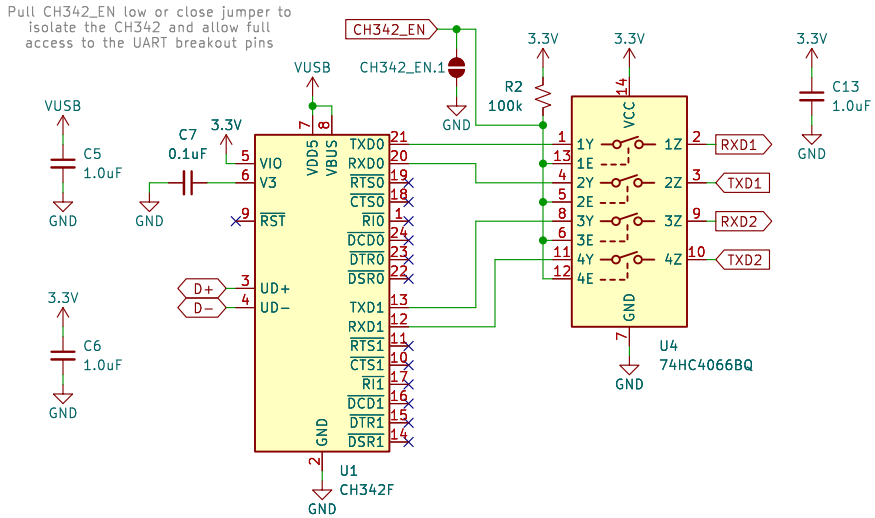

USB

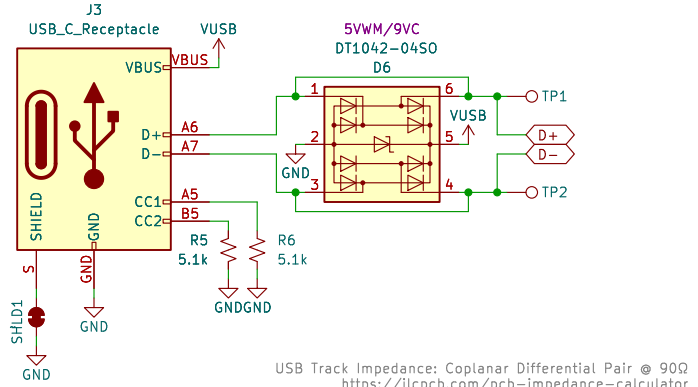

IMU – IM19

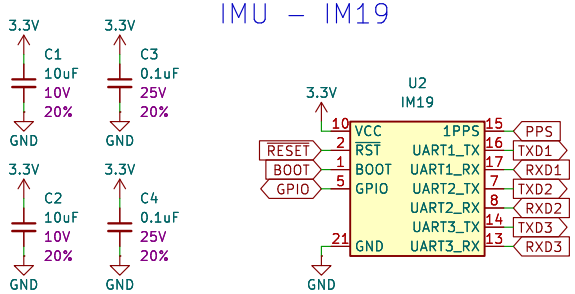

Locking JST

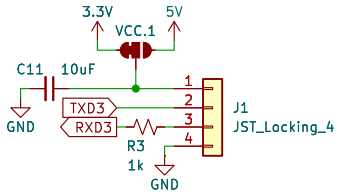

Breakouts

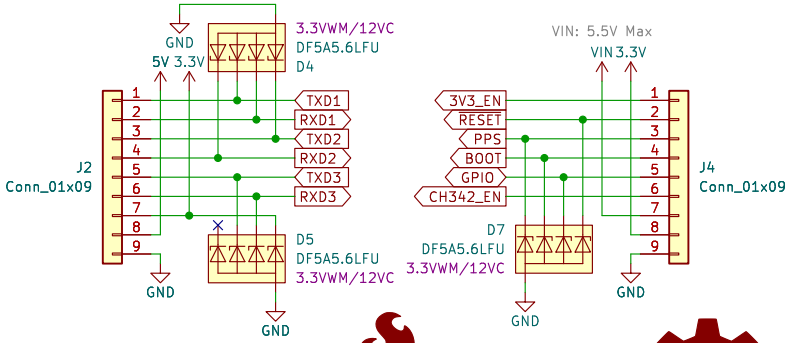

Power Mux

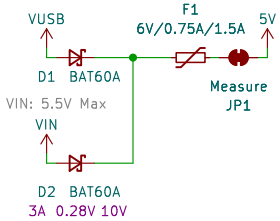

Voltage Regulation – PT9080-3.3

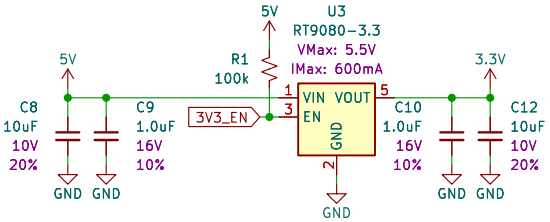

LED

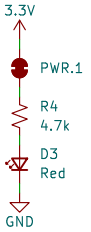

Open jumper to disable LED

Designed by: P.C.
SparkFun Electronics
Sheet: /
File: SparkFun_IM19_IMU_Breakout.kicad_sch

Title: SparkFun IM19 IMU Breakout

Size: USLetter	Date: 2025-10-17	**Rev: v10**
KiCad E.D.A. 9.0.5		Id: 1/1