USB to UART – CH342

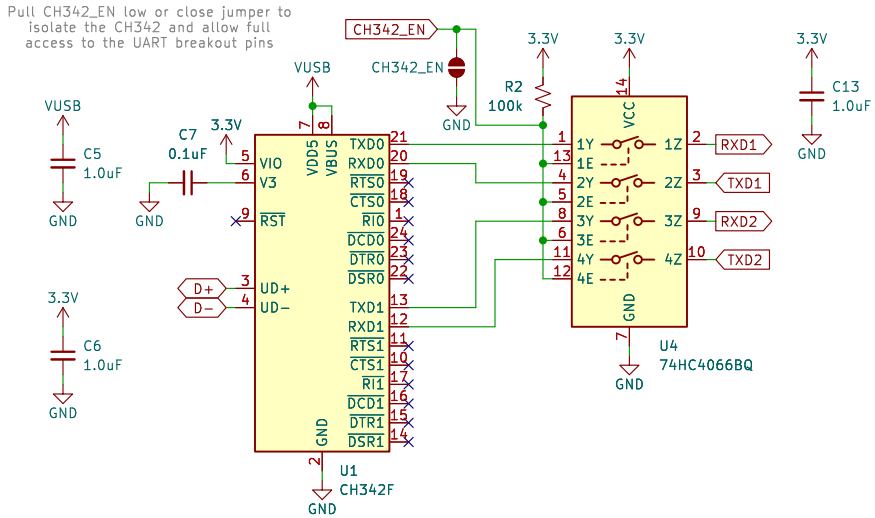

USB

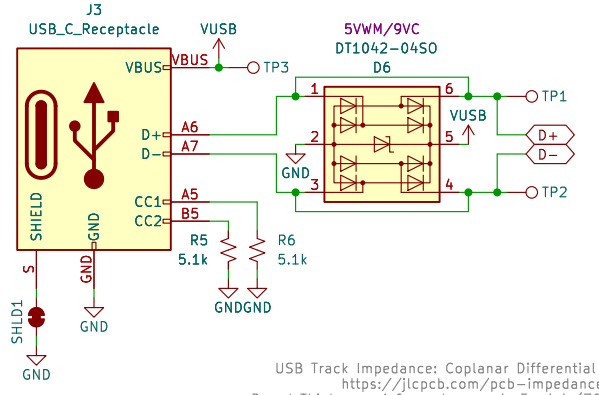

USB Track Impedance: Coplanar Differential Pair @ 90Ω
https://jlcpcb.com/pcb-impedance-calculator
Board Thickness: 1.6mm. Layers: 4. Er: 4.4 (7628 Prepreg)
Dielectric Thickness (Layer 1 to 2): 8.28mil/0.21mm (JLC7628)
Copper Thickness (1oz outer / 0.5oz inner): 1.38mil/0.035mm
Polygon Isolation: 7mil/0.1778mm
Trace Spacing: 9.07mil/0.2304mm
Trace Width: 10.93mil/0.2776mm
Trace center-to-center: 20.0mil/0.508mm

IMU – IM19

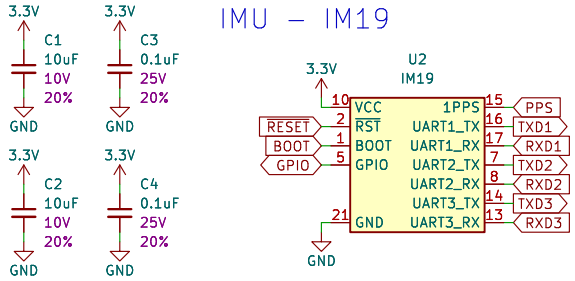

RST has internal pull-up

BOOT:
High: Boot mode
NC or low: normal working mode

Locking JST

Modify jumper to select 5V vs. 3.3V on Pin 1. With care, Pin 1 can be used for power output or input.

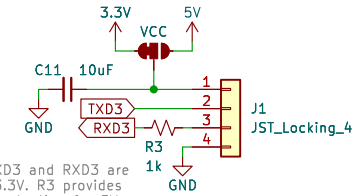

TXD3 and RXD3 are 3.3V. R3 provides protection for 5V.

Breakouts

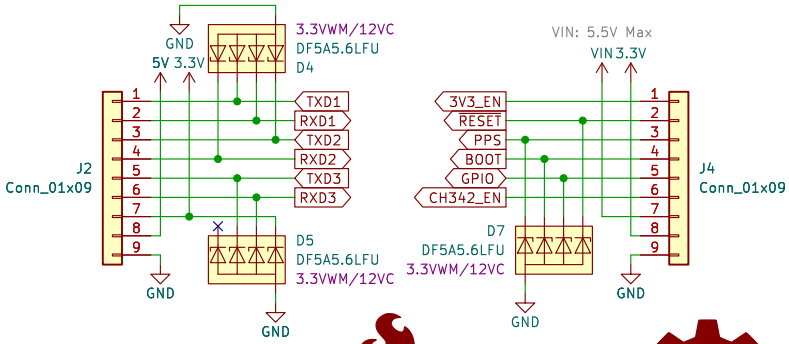

Power Mux

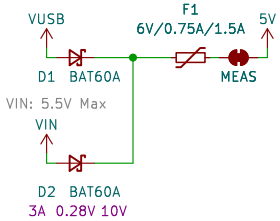

Voltage Regulation – PT9080-3.3

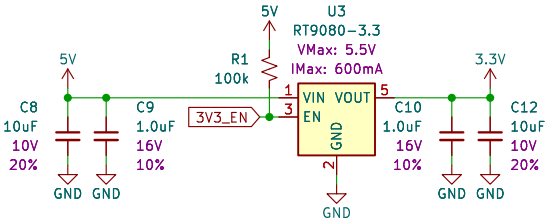

LED

Open jumper to disable LED

Designed by: P.C.
SparkFun Electronics
Sheet: /
File: SparkFun_IM19_IMU_Breakout.kicad_sch

Title: SparkFun IM19 IMU Breakout

Size: USLetter	Date: 2025-10-29	**Rev: v10**
KiCad E.D.A. 9.0.6-rc2		Id: 1/1