Bottom Headers

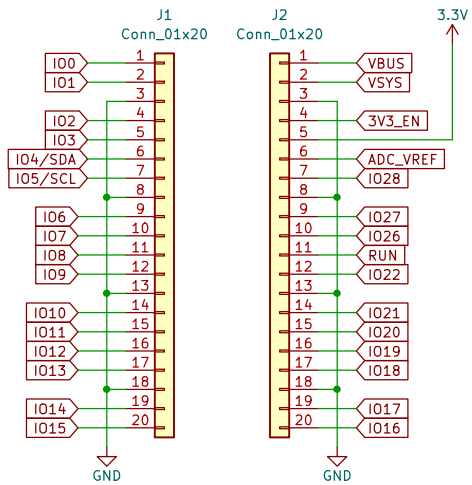

Top Headers

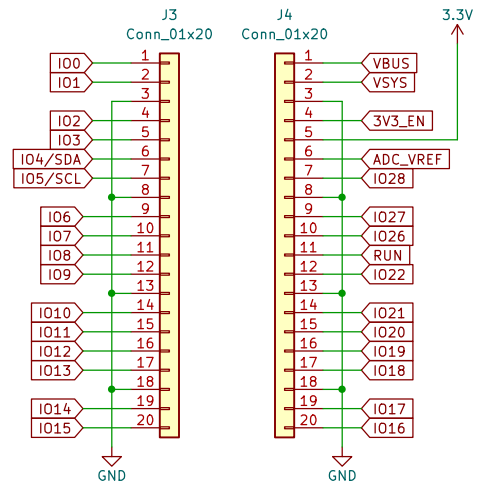

Qwiic Connector

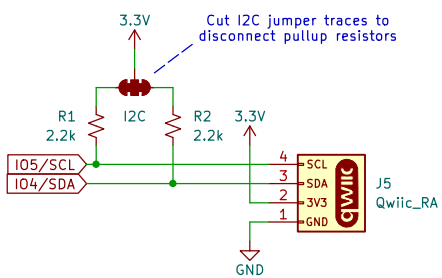

Reset Button

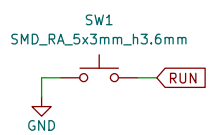

Designed by: You
SparkFun
Sheet: /
File: SparkFun_Pico_Add_On_Flipper.kicad_sch

Title: SparkFun Product (Qwiic)

Size: USLetter	Date:	**Rev: v10**
KiCad E.D.A. 8.99.0-2194-gb3b7cbcab2		Id: 1/1