TMF882x sensor shield

TMF882x sensor shield

Table of Contents

Schematic

- Title Page
- Project Page (This page)
- Schematics

Layout

- Top Layer
- Mid 1 - GND
- Mid 2 - PWR
- Bottom Layer
- Board Dimensions
- Drill Drawing

Assembly Drawing

- Top Assembly
- Bottom Assembly

Drill Drawing

- Drill Drawing

Mech Drawing

- Layer Stack

BOM

- Sheet 12: Bill of Materials

3D PDF

- Sheet 13: 3d PDF of Board

Revision History

Title: TMF882x sensor shield	
Board Number: MS-TMF882x_Shield-01	Rev: A
	Date: 11.03.2021
	Author: J.Dolic
	Sheet 2 of 3

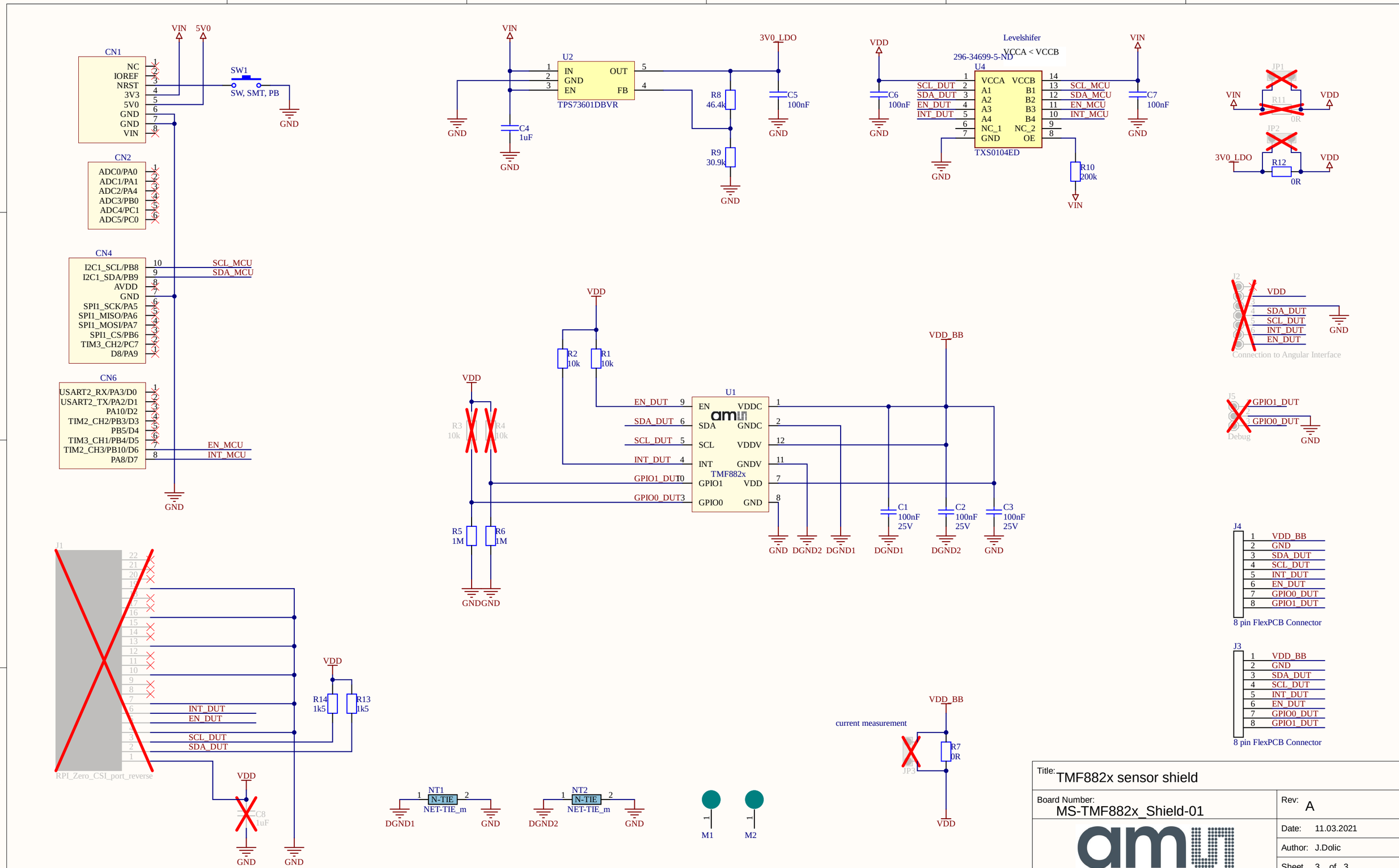

Title: TMF882x sensor shield

Board Number: MS-TMF882x_Shield-01

Rev: A

Date: 11.03.2021

Author: J.Dolic

Sheet 3 of 3

Layer	Name	Material	Thickness	Constant	Gerber
	Top Overlay				GTO
	Top Solder	Solder Resist	0,40mil	3,5	GTS
1	TOP	Copper	0,70mil		GTL
	Dielectric1	FR-4	8,00mil	4,5	
2	MID1	Copper	1,40mil		G1
	Dielectric2	FR-4	41,00mil	4,5	
3	MID2	Copper	1,40mil		G2
	Dielectric3	FR-4	8,00mil	4,5	
4	BOTTOM	Copper	0,70mil		GBL
	Bottom Solder	Solder Resist	0,40mil	3,5	GBS
	Bottom Overlay				GBO
Total board thickness:			62,00mil		

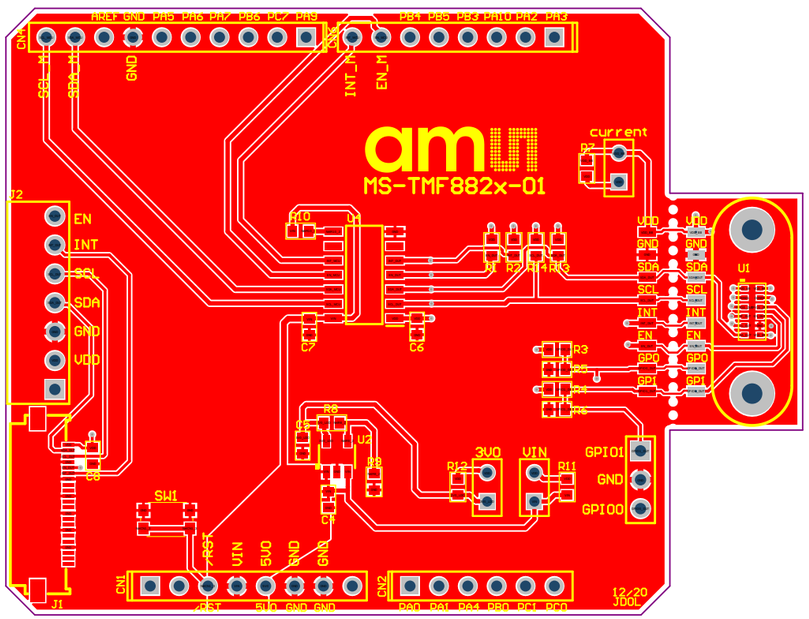

Board Details

1. Board Size: 2309.27 mils x 2100 mils
2. Board Thickness: 62.00 mil
3. Board Material: FR-4
4. Board Finish: ENIG
5. Component count: 43
6. Pad Count: 191
7. Hole Count: 103
8. Soldermask Color: Black
9. Silkscreen Color: White
10. No Silkscreen over exposed copper.
11. Dimensions shown are in mils unless marked.
12. No additional silkscreen to be added.
13. Boards Shall be fabricated to IPC-600 Class 1
14. The PCB assembly shall be ROHS compliant.

Layers Currently On

TOP Title_Block Multi-Layer Top Overlay	Board Outline Layer Stack

Title	TMF882x sensor shield		
Number	MS-TMF882x_Shield-01	Rev	A
Print Name	Top Layer		
Variant: [No Variations]		Print Date: 11.03.2021	
		Drawn By:J.Dolic	

Layer	Name	Material	Thickness	Constant	Gerber
	Top Overlay				GTO
	Top Solder	Solder Resist	0,40mil	3,5	GTS
1	TOP	Copper	0,70mil		GTL
	Dielectric1	FR-4	8,00mil	4,5	
2	MID1	Copper	1,40mil		G1
	Dielectric2	FR-4	41,00mil	4,5	
3	MID2	Copper	1,40mil		G2
	Dielectric3	FR-4	8,00mil	4,5	
4	BOTTOM	Copper	0,70mil		GBL
	Bottom Solder	Solder Resist	0,40mil	3,5	GBS
	Bottom Overlay				GBO

Total board thickness: 62,00mil

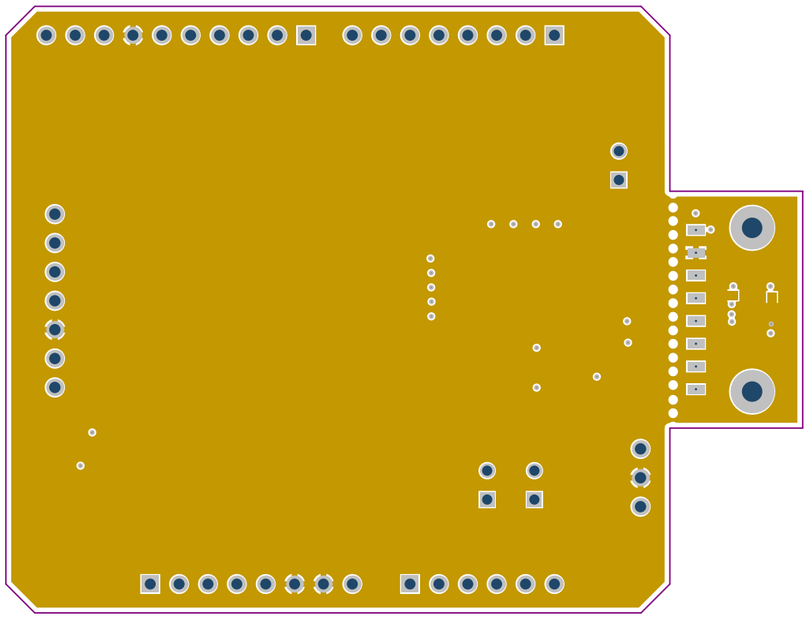

Board Details

1. Board Size: 2309.27 mils x 2100 mils
2. Board Thickness: 62.00 mil
3. Board Material: FR-4
4. Board Finish: ENIG
5. Component count: 43
6. Pad Count: 191
7. Hole Count: 103
8. Soldermask Color: Black
9. Silkscreen Color: White
10. No Silkscreen over exposed copper.
11. Dimensions shown are in mils unless marked.
12. No additional silkscreen to be added.
13. Boards Shall be fabricated to IPC-600 Class 1
14. The PCB assembly shall be ROHS compliant.

Layers Currently On

MID1

Title_Block

Multi-Layer

Board Outline
Layer Stack

Title	TMF882x sensor shield
Number	MS-TMF882x_Shield-01
Rev	A
Print Name	Mid1 Layer - GND
Variant: [No Variations]	Print Date: 11.03.2021
	Drawn By:J.Dolic

Layer	Name	Material	Thickness	Constant	Gerber
	Top Overlay				GTO
	Top Solder	Solder Resist	0,40mil	3,5	GTS
1	TOP	Copper	0,70mil		GTL
	Dielectric1	FR-4	8,00mil	4,5	
2	MID1	Copper	1,40mil		G1
	Dielectric2	FR-4	41,00mil	4,5	
3	MID2	Copper	1,40mil		G2
	Dielectric3	FR-4	8,00mil	4,5	
4	BOTTOM	Copper	0,70mil		GBL
	Bottom Solder	Solder Resist	0,40mil	3,5	GBS
	Bottom Overlay				GBO

Total board thickness: 62,00mil

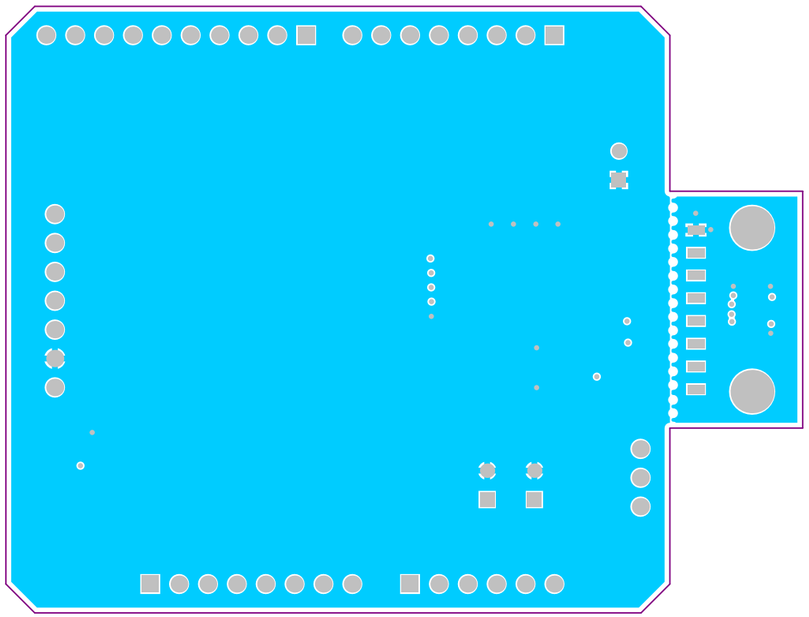

Board Details

1. Board Size: 2309.27 mils x 2100 mils
2. Board Thickness: 62.00 mil
3. Board Material: FR-4
4. Board Finish: ENIG
5. Component count: 43
6. Pad Count: 191
7. Hole Count: 103
8. Soldermask Color: Black
9. Silkscreen Color: White
10. No Silkscreen over exposed copper.
11. Dimensions shown are in mils unless marked.
12. No additional silkscreen to be added.
13. Boards Shall be fabricated to IPC-600 Class 1
14. The PCB assembly shall be ROHS compliant.

Layers Currently On

Title_Block Multi-Layer	MID2 Board Outline Layer Stack

Title	TMF882x sensor shield	
Number	MS-TMF882x_Shield-01	Rev A
Print Name	Mid2 Layer - PWR	
Variant: [No Variations]	Print Date: 11.03.2021	
	Drawn By:J.Dolic	

Layer	Name	Material	Thickness	Constant	Gerber
	Top Overlay				GTO
	Top Solder	Solder Resist	0,40mil	3,5	GTS
1	TOP	Copper	0,70mil		GTL
	Dielectric1	FR-4	8,00mil	4,5	
2	MID1	Copper	1,40mil		G1
	Dielectric2	FR-4	41,00mil	4,5	
3	MID2	Copper	1,40mil		G2
	Dielectric3	FR-4	8,00mil	4,5	
4	BOTTOM	Copper	0,70mil		GBL
	Bottom Solder	Solder Resist	0,40mil	3,5	GBS
	Bottom Overlay				GBO

Total board thickness: 62,00mil

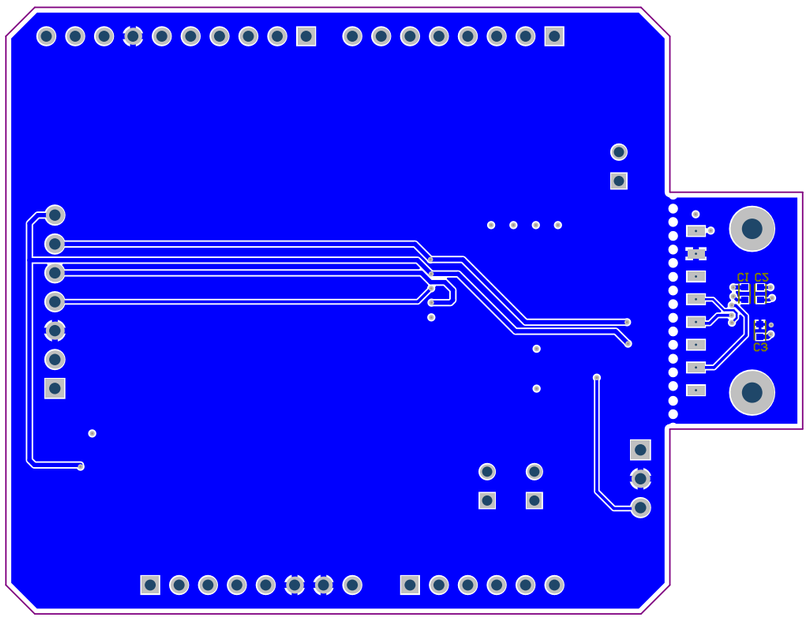

Board Details

1. Board Size: 2309.27 mils x 2100 mils
2. Board Thickness: 62.00 mil
3. Board Material: FR-4
4. Board Finish: ENIG
5. Component count: 43
6. Pad Count: 191
7. Hole Count: 103
8. Soldermask Color: Black
9. Silkscreen Color: White
10. No Silkscreen over exposed copper.
11. Dimensions shown are in mils unless marked.
12. No additional silkscreen to be added.
13. Boards Shall be fabricated to IPC-600 Class 1
14. The PCB assembly shall be ROHS compliant.

Layers Currently On

Title_Block	BOTTOM
	Board Outline
	Layer Stack
Multi-Layer	
	Bottom Overlay

Title	TMF882x sensor shield
Number	MS-TMF882x_Shield-01
Rev	A
Print Name	Bottom Layer
Variant: [No Variations]	Print Date: 11.03.2021
	Drawn By:J.Dolic

Layer	Name	Material	Thickness	Constant	Gerber
	Top Overlay				GTO
	Top Solder	Solder Resist	0,40mil	3,5	GTS
1	TOP	Copper	0,70mil		GTL
	Dielectric1	FR-4	8,00mil	4,5	
2	MID1	Copper	1,40mil		G1
	Dielectric2	FR-4	41,00mil	4,5	
3	MID2	Copper	1,40mil		G2
	Dielectric3	FR-4	8,00mil	4,5	
4	BOTTOM	Copper	0,70mil		GBL
	Bottom Solder	Solder Resist	0,40mil	3,5	GBS
	Bottom Overlay				GBO

Total board thickness: 62,00mil

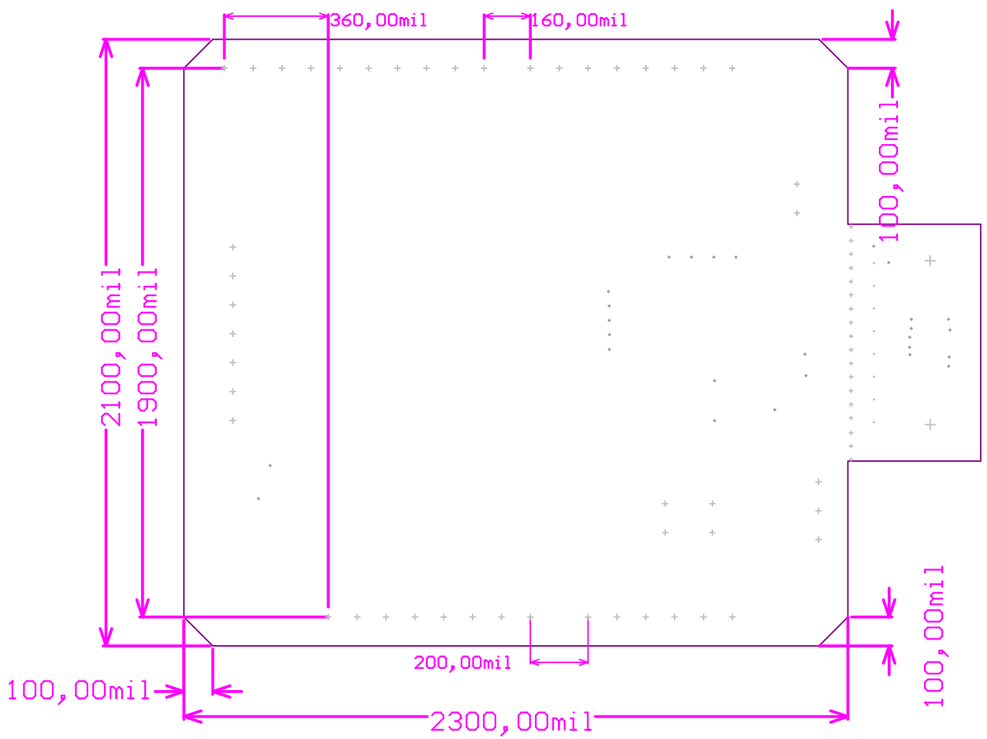

Board Details

1. Board Size: 2309.27 mils x 2100 mils
2. Board Thickness: 62.00 mil
3. Board Material: FR-4
4. Board Finish: ENIG
5. Component count: 43
6. Pad Count: 191
7. Hole Count: 103
8. Soldermask Color: Black
9. Silkscreen Color: White
10. No Silkscreen over exposed copper.
11. Dimensions shown are in mils unless marked.
12. No additional silkscreen to be added.
13. Boards Shall be fabricated to IPC-600 Class 1
14. The PCB assembly shall be ROHS compliant.

Layers Currently On

Dimensions	Board Outline
Title_Block	Layer Stack
	Drill Guide
Multi-Layer	Keep-Out Layer

Title	TMF882x sensor shield	
Number	MS-TMF882x_Shield-01	Rev A
Print Name	Board Dimensions	
Variant: [No Variations]		Print Date: 11.03.2021
		Drawn By:J.Dolic

Layer	Name	Material	Thickness	Constant	Gerber
	Top Overlay				GTO
	Top Solder	Solder Resist	0,40mil	3,5	GTS
1	TOP	Copper	0,70mil		GTL
	Dielectric1	FR-4	8,00mil	4,5	
2	MID1	Copper	1,40mil		G1
	Dielectric2	FR-4	41,00mil	4,5	
3	MID2	Copper	1,40mil		G2
	Dielectric3	FR-4	8,00mil	4,5	
4	BOTTOM	Copper	0,70mil		GBL
	Bottom Solder	Solder Resist	0,40mil	3,5	GBS
	Bottom Overlay				GBO

Total board thickness: 62,00mil

Board Details

1. Board Size: 2309.27 mils x 2100 mils
2. Board Thickness: 62.00 mil
3. Board Material: FR-4
4. Board Finish: ENIG
5. Component count: 43
6. Pad Count: 191
7. Hole Count: 103
8. Soldermask Color: Black
9. Silkscreen Color: White
10. No Silkscreen over exposed copper.
11. Dimensions shown are in mils unless marked.
12. No additional silkscreen to be added.
13. Boards Shall be fabricated to IPC-600 Class 1
14. The PCB assembly shall be ROHS compliant.

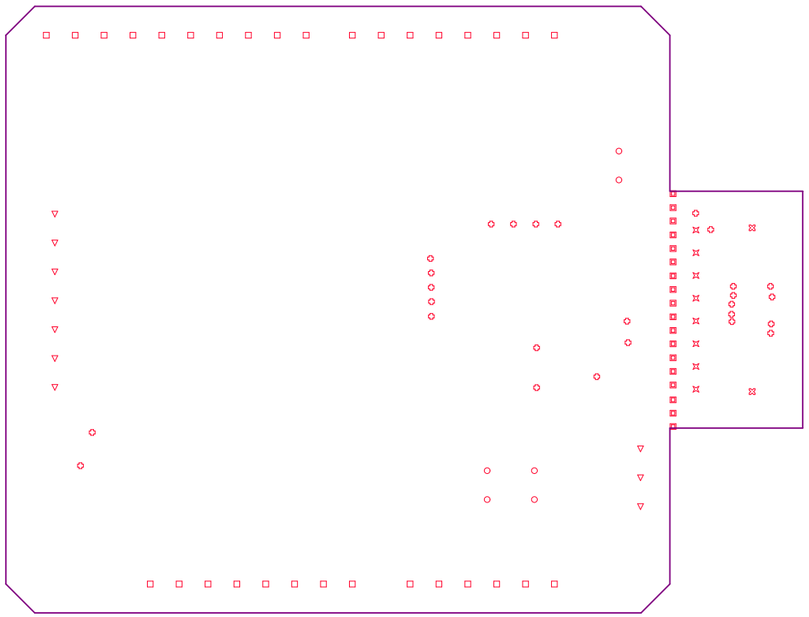

Symbol	Count	Hole Size	Plated	Hole Type	Drill Layer Pair	Via/Pad	Pad Shape
⊠	2	1,800mm (70,87mil)	PTH	Round	TOP - BOTTOM	Pad	Rounded
○	6	0,900mm (35,43mil)	PTH	Round	TOP - BOTTOM	Pad	(Mixed)
⌘	8	0,200mm (7,87mil)	PTH	Round	TOP - BOTTOM	Pad	Rectangle
▽	10	1,000mm (39,37mil)	PTH	Round	TOP - BOTTOM	Pad	Rounded
⧈	18	0,600mm (23,62mil)	NPTH	Round	TOP - BOTTOM	Pad	Rounded
✪	27	0,203mm (8,00mil)	PTH	Round	TOP - BOTTOM	Via	Rounded
□	32	0,965mm (38,00mil)	PTH	Round	TOP - BOTTOM	Pad	(Mixed)
	103 Total						

Layers Currently On

Title_Block Drill Drawing	Board Outline Layer Stack

Title	TMF882x sensor shield	
Number	MS-TMF882x_Shield-01	Rev A
Print Name	Drill Drawing	
Variant: [No Variations]		Print Date: 11.03.2021
		Drawn By:J.Dolic

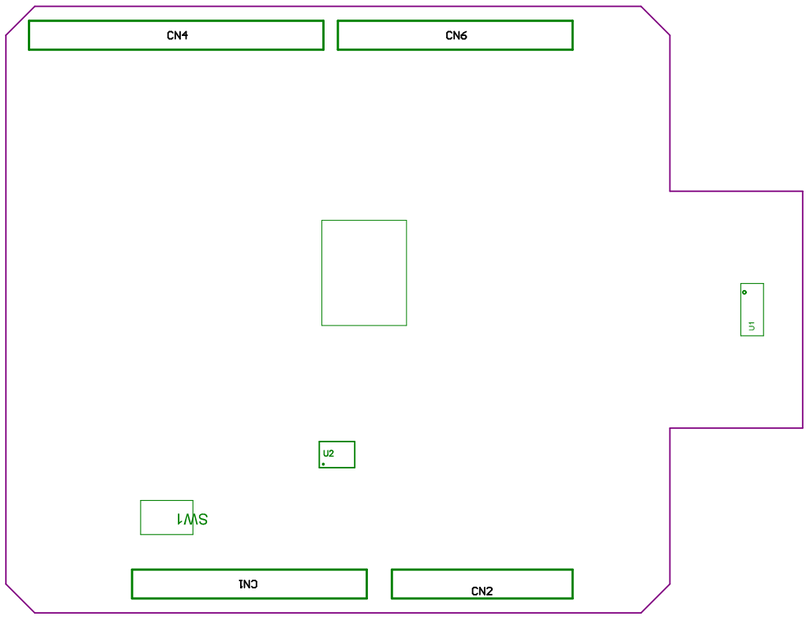

Layers Currently On

Title_Block	**Board Outline**
Multi-Layer	
Top Designator	

Title	TMF882x sensor shield
Number	MS-TMF882x_Shield-01
Rev	A
Print Name	TOP Assembly
Variant: Default Build	Print Date: 11.03.2021
	Drawn By:J.Dolic

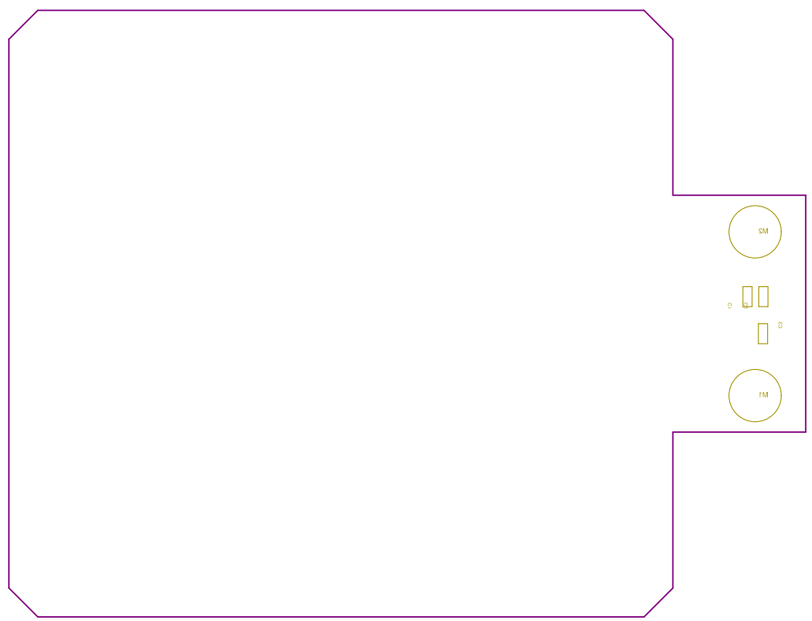

Layers Currently On

Title_Block	Board Outline
Multi-Layer	Bottom Designator

Title	TMF882x sensor shield
Number	MS-TMF882x_Shield-01
Rev	A
Print Name	BOTTOM Assembly
Variant: Default Build	Print Date: 11.03.2021
	Drawn By:J.Dolic

Fab Notes:

1. Board Size: 2309.27 mils x 2100 mils
2. Board Thickness: 62.00 mil
3. Board Material: FR-4
4. Board Finish: ENIG
5. Component count: 43
6. Pad Count: 191
7. Hole Count: 103
8. Soldermask Color: Black
9. Silkscreen Color: White
10. No Silkscreen over exposed copper.
11. Dimensions shown are in mm unless marked.
12. No additional silkscreen to be added.
13. Boards Shall be fabricated to IPC-600 Class 1
14. The PCB assembly shall be ROHS compliant.

View from Top side (Scale 2.5193)

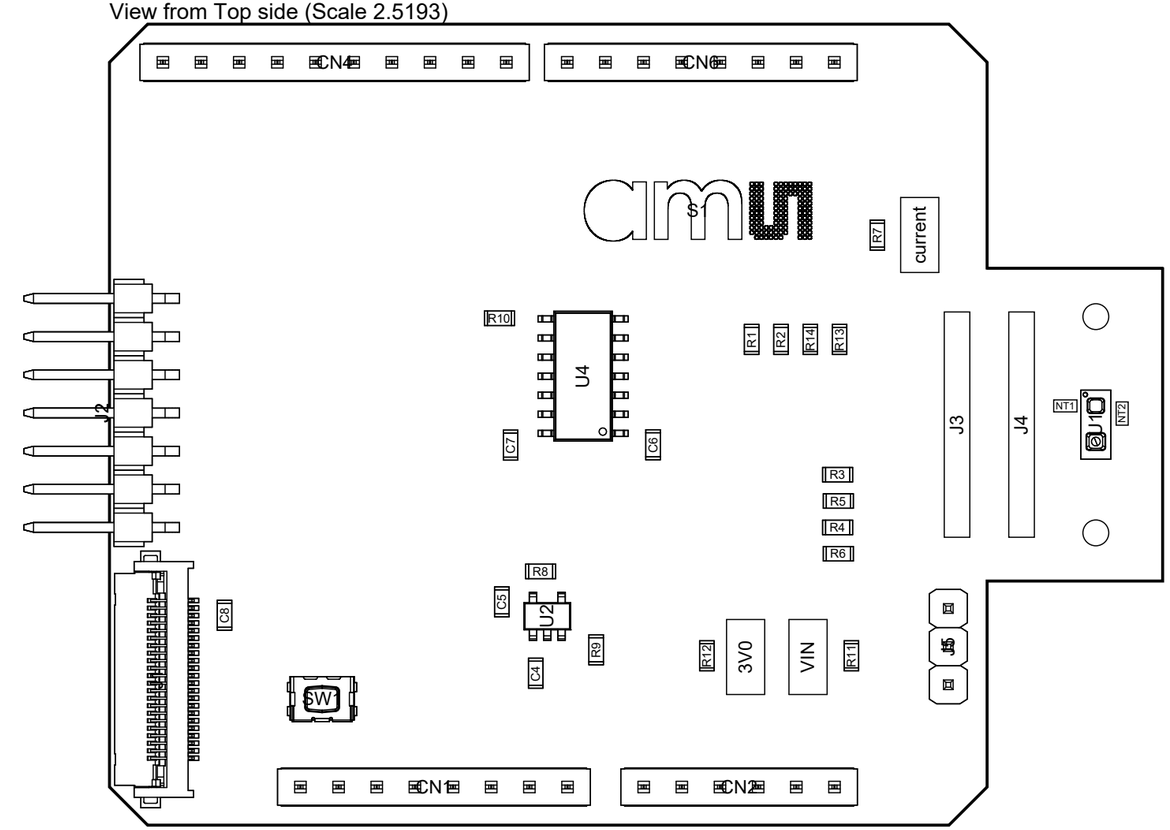

Layer Stack Legend

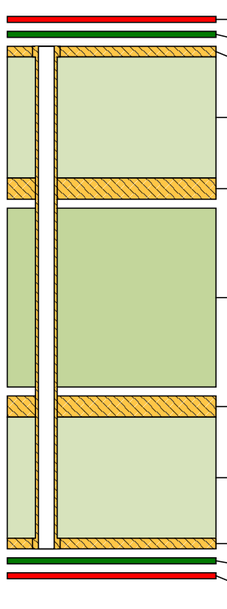

Material	Layer	Thickness	Dielectric Material	Type	Gerber
	Top Overlay			Legend	GTO
Surface Material	Top Solder	0.01mm	Solder Resist	Solder Mask	GTS
Copper	TOP	0.02mm		Signal	GTL
Core		*0.20mm*	*FR-4*	*Dielectric*	
Copper	MID1	0.04mm		Signal	G1
Prepreg		*1.04mm*	*FR-4*	*Dielectric*	
Copper	MID2	0.04mm		Signal	G2
Core		*0.20mm*	*FR-4*	*Dielectric*	
Copper	BOTTOM	0.02mm		Signal	GBL
Surface Material	Bottom Solder	0.01mm	Solder Resist	Solder Mask	GBS
	Bottom Overlay			Legend	GBO

Total thickness: 1.57mm

Title: TMF882x sensor shield New Text

Board Number: MS-TMF882x_Shield-01

Date: 11.03.2021

Engineer: J.Dolic New

Bill of Materials

TMF882x sensor shield

Source Data From: MS-TMF882x_Shield-01.PrjPcb

Project: MS-TMF882x_Shield-01.PrjPcb

Variant: Default Build

Creation Date 11.03.2021 15:52

Print Date: 11-Mar-21 3:52:17 PM

Designator	Comment	Manufacturer	Manufacturer Part Number	Description	Name Error:' A	Quantity
C1, C2, C3	0.1uF,6V3, 0402, 10%	Murata	GRM155R71E104KE14D	Cap Ceramic 0.1uF 25V X7R 10% SMD 0402 125C Paper T/R, GRM155R71E104KE14D		3
C4	1uF	Murata	GRM188R71A105KA61D	CAP CER 1UF 10V X7R 0603		1
C5, C6, C7	0.1uF	Murata	GRM188R72A104KA35D	Multilayer Ceramic Capacitors MLCC - SMD/SMT 0.1uF 6.3Volts X7R 10%		3
CN1, CN6	8Pin Arduino Conn	Samtec	SSQ-108-04-G-S	Conn Socket Strip SKT 8 POS 2.54mm Solder ST Thru-Hole		2
CN2	6Pin Arduino Conn	Samtec	SSQ-106-04-G-S	Conn Socket Strip SKT 6 POS 2.54mm Solder ST Thru-Hole		1
CN4	10Pin Arduino Conn	Samtec	SSQ-110-04-G-S	Conn Socket Strip SKT 10 POS 2.54mm Solder ST Thru-Hole		1
M1, M2	Mounting Hole	PennEngineering	SMTSO-M1.6-1ET	Mounting nut M1.6 thread, Mounting nut M1.6 thread		2
R1, R2	10k	Vishay	CRCW060310K0FKEA	VISHAY - CRCW060310K0FKEA - SMD Chip Resistor, 0603 [1608 Metric], 10 kohm, CRCW e3 Series, 75 V, Thick Film, 100 mW		2
R5, R6	1M	Vishay Dale	CRCW06031M00FKEAHP	VISHAY - CRCW06031M00FKEAHP - RES, AEC-Q200, THICK FILM, 1M, 0603		2
R7, R12	0R	Multicomp	MC0.063W06030R	MULTICOMP MC0063W06030R Chip SMD Resistor, MC Series, 0.063 W, 50 V, 0603 [1608 Metric]		2
R8	46.4k	Multicomp	MC0.063W06031%46K4FR	RESISTOR, 46K4, 0.063W, 1%, 0603, REEL		1
R9	30.9k	Vishay	CRCW060330K9FKEA	RES SMD 30.9K OHM 1% 1/10W 0603		1
R10	200k	Vishay	CRCW0201200KFNED	Res Thick Film 0201 200K Ohm 1% 1/20W ±200ppm/°C Molded SMD SMD Paper T/R		1
R13, R14	1k5	Vishay	CRCW06031K50FKEA	Res Thick Film 0603 1.5K Ohm 1% 0.1W(1/10W) ±100ppm/C Pad SMD Automotive T/R		2
SW1	SW, SMT, PB	ITT / C&K Components	KMR221GLFS	SW, SMT, PB, KMR221GLFS		1
U1	TOF	ams AG	TMF882x	TOF TMF882x		1
U2	TPS73601DBVR	TI	TPS73601DBVR	Adj Low Dropout Regulator		1
U4	TXS0104ED	Texas Instruments	TXS0104ED	TEXAS INSTRUMENTS - TXS0104ED - Voltage Level Translator, Bidirectional, 4 Input, 1 mA, 165 ns, 24 Mbps, 1.65 V to 3.6 V, SOIC-14		1
						28

Approved

Notes

Parts with alternate marked as YES may be replaced by an equivalent with preapproval from AMS.
Parts from ams AG will be consigned

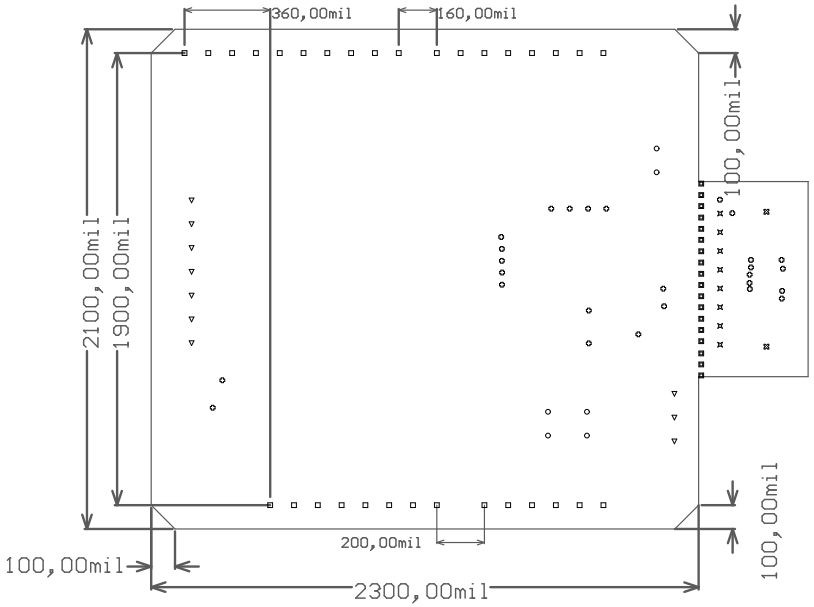

Symbol	Count	Hole Size	Plated	Hole Type	Drill Layer Pair	Via/Pad	Pad Shape
⊠	2	1,800mm (70,87mil)	PTH	Round	TOP - BOTTOM	Pad	Rounded
○	6	0,900mm (35,43mil)	PTH	Round	TOP - BOTTOM	Pad	(Mixed)
⌘	8	0,200mm (7,87mil)	PTH	Round	TOP - BOTTOM	Pad	Rectangle
▽	10	1,000mm (39,37mil)	PTH	Round	TOP - BOTTOM	Pad	Rounded
▣	18	0,600mm (23,62mil)	NPTH	Round	TOP - BOTTOM	Pad	Rounded
✪	27	0,203mm (8,00mil)	PTH	Round	TOP - BOTTOM	Via	Rounded
□	32	0,965mm (38,00mil)	PTH	Round	TOP - BOTTOM	Pad	(Mixed)
	103 Total						

Layers Currently On

Dimensions **Title_Block** **Drill Drawing**	**Board Outline**

Title	TMF882x sensor shield	
Number	MS-TMF882x_Shield-01	Rev A
Print Name	Drill Drawing For (BOTTOM,TOP)	
Variant: [No Variations]		Print Date: 11.03.2021
		Drawn By:J.Dolic

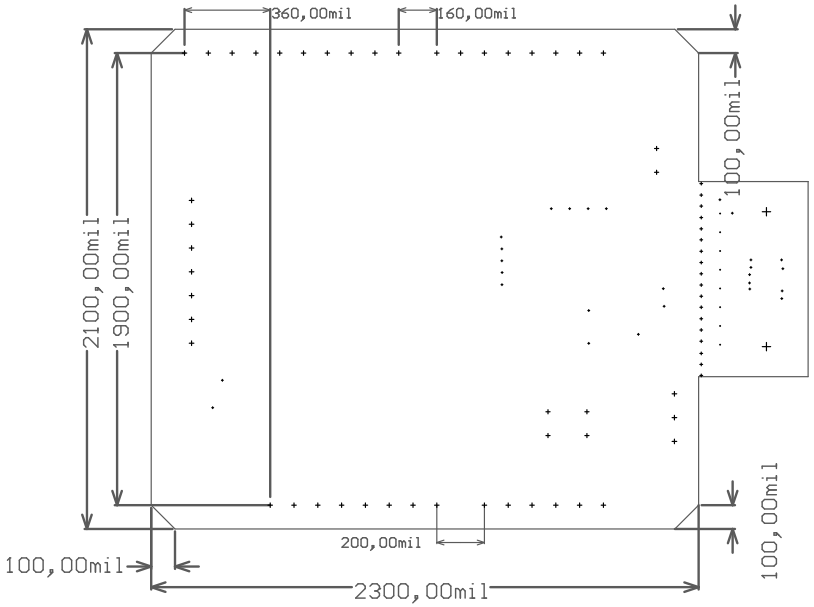

Layers Currently On

Dimensions **Title_Block**	**Board Outline** **Drill Guide**

Title	TMF882x sensor shield
Number	MS-TMF882x_Shield-01
Rev	A
Print Name	Drill Guide For (BOTTOM,TOP)
Variant: [No Variations]	Print Date: 11.03.2021
	Drawn By:J.Dolic